We support PV systems

D-Dome 6 System
Xpress and Classic

ASSEMBLY MANUAL

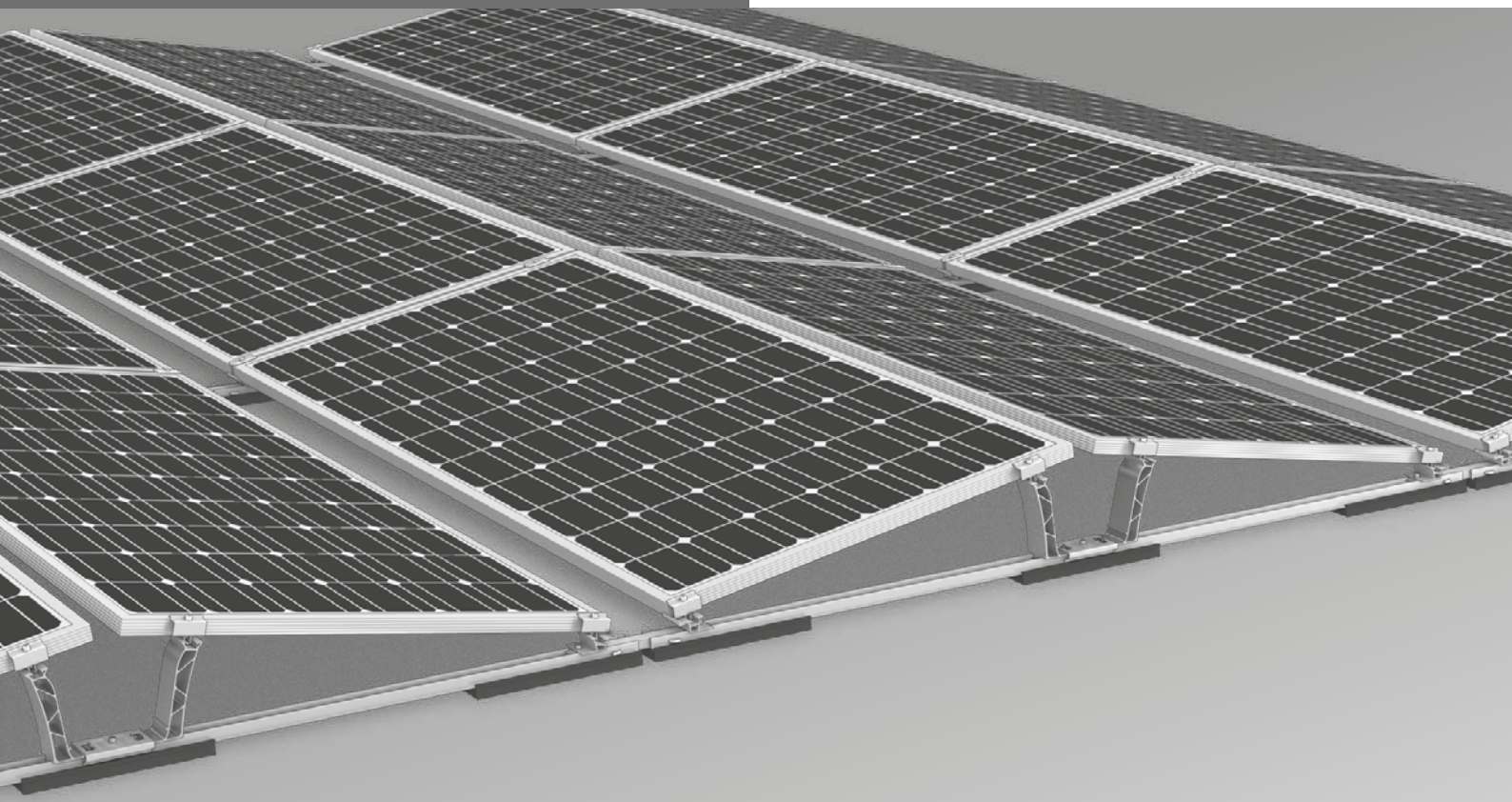

Content

/ Tools overview 3

/ General safety information 4

/ The following guidelines apply 5
· Planning with K2 Base 5
· Roof requirements 5
· Static requirements 5
· Important mounting instructions 5

/ Components 6
· Base components: D-Dome 6 Xpress 6
· Base components: D-Dome 6 Classic 8
· Ballast 10
· Fixed connection to the roof 11

/ Assembly 13
· Installation of module field and thermal separations 13
· Module blocks with D-Dome 6 Xpress 14
· Module blocks with D-Dome 6 Classic 17
· Ballasting options and specifications 22
· Module assembly 24

/ Optional assembly steps 25
· Fixed connection with Dome FixPro using Solmont mounting base 25
· Cable-Manager 26
· Module frame earthing with TerraGrif 26
· Cable management with PVX MultiMount 27

/ Notes 29

Quality tested – several certifications

K2 Systems stands for secure connections, highest quality and precision. Our customers and business partners have known that for a long time. Independent institutes have tested, confirmed and certified our capabilities and components.

Please find our quality and product certificates under:
k2-systems.com/en/technical-information

Tools overview

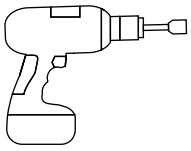

6 mm

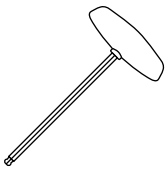

6 mm

6 - 30 Nm
(4.5 - 22.2 lb-ft)

6 mm

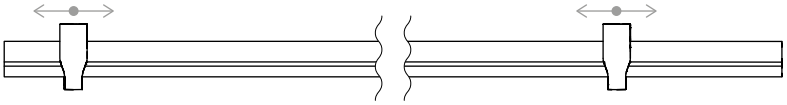

Dome Speed Spacer 2.25 / 2.50 · 2003253 / 2004129
Distance template for module lengths

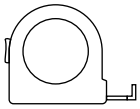

≥ 3.0 m

≥ 6.0 m

Digital Toolbox

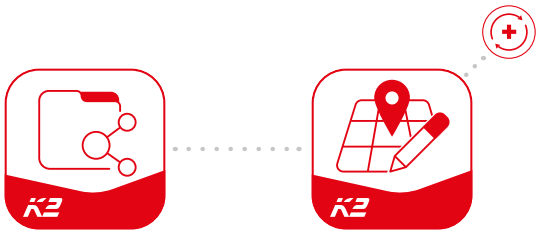

Do you already know our digital services? Use our K2 Roof Check App now and record the first important data directly at the customer or project site. Simply transfer the data to our online planning software K2 Base. Here you can plan your project easily, safely and quickly. You receive a detailed project report with assembly plan and static report.
The K2+ interface enables seamless project data transfer to the planning tools of other manufacturers. With the K2 DocuApp, project documentation is done quickly and easily - without annoying paperwork.

Get started and register now:

app.k2-systems.com

base.k2-systems.com

docuapp.k2-systems.com

General safety information

Please note that our general mounting instructions must be followed at all times and can be viewed online at k2-systems.com/en/technical-information

- The equipment may only be installed and operated by qualified and adequately trained installers.

- Prior to installation, ensure that the product complies with on-site static loading requirements.
  For roof-mounted systems, the roof load-bearing capacity must always be checked.

- National and local building regulations and environmental requirements must be adhered to.

- Compliance with health and safety regulations, accident prevention guidelines and applicable standards is required.
  - Protective equipment such as safety helmet, boots and gloves must be worn.
  - Roofing works must be in accordance with roofing regulations utilising fall protection safeguards when eaves height exceeds 3 m.
  - At least two people must be present for the duration of the installation work in order to provide rapid assistance in the event of an emergency.

- K2 mounting systems are continuously developed and improved and the installation process may thereby change at any time. Prior to installation consult our website at
  www.k2-systems.com/en/technical-information for up-to-date instructions.
  We can send you the latest version on request.

- The assembly instructions of the module manufacturer must be adhered to.

- Equipotential bonding/grounding/earthing between individual parts is to be performed according to country specific standards, as well as national laws and regulations.

- At least one copy of the assembly instructions should be available on site throughout the duration of the installation.

- Failure to adhere to our general safety and assembly instructions and not using all system components, K2 is not liable for any resulting defects or damages. We do not accept liability for any damage resulting in the use of competitor's parts. Warranty is excluded in such cases.

- German law shall apply excluding the UN Convention on CISG. Place of venue is Stuttgart. Our General Terms of Business apply.

- If all safety instructions are adhered to and the system is correctly installed, there is a product warranty entitlement of 12 years! We strongly recommend reviewing our terms of guarantee, which can be viewed at
  www.k2-systems.com/en/technical-information
  We will also send this information on request.

- Dismantling of the system is performed in reverse order to the assembly.

- K2 stainless steel components are available in different corrosion resistance classes. Each structure or component must be carefully checked for possible corrosion exposure.

The following guidelines apply

The D-Dome 6 system can be installed as standard under the following conditions. Even if the system is capable of meeting higher demands through the integration of safety standards, please get in touch with your contact at K2 Systems if the specified values are exceeded.

Planning with K2 Base

We recommend our free online software K2 Base for the planning. In five steps, you can plan the right assembly system and get a construction recommendation, parts list and the structural analysis report. Simply register and start planning:
base.k2-systems.com

Roof requirements

- This system can be installed on all common flat roofs with a pressure-resistant substrate and a roof pitch of ≤ 3° without a fixed connection.
- Fixed connection > 3° to ≤ 10°
  · Up to ≤ 5° combinations with ballast possible
  · > 5° to ≤ 10° only without ballast
- The roof surface must be clean and dry. Roof irregularities must be corrected or removed where appropriate.
- The coefficient of friction of the roof must be determined on-site. See video
  k2-systems.com/en/friction-coefficient

Static requirements

- It is essential to check that the roof structure has sufficient residual load capacity and that the pressure capacity of the roof insulation (where present) is not exceeded.
- Suitable for framed modules with a frame height 30 - 50 mm
- Permissible module dimensions:
  Classic / Xpress (D-Dome 6.10 Base Set L)
  length 1448 - 2390 mm, width 950 - 1170 mm
  Xpress (D-Dome 6.15 Base Set)
  length 1448 - 2390 mm, width 960 - 1170 mm

Important mounting instructions

Mounting system

- The exact mounting angle deviates slightly from 10° depending on the module width. This angle decreases with higher module widths.
- A minimum distance to the roof edge of 600 mm must be maintained. For building heights below 5 m, the minimum distance can be reduced.
- The compatibility of the roof covering and the Mat S support pad must be checked.
- An array must consist of at least two elevations must for this mounting system to be properly utilized.
- Ensure a thermal separation (distance between module blocks) in the direction of the base rail and module rows must be maintained according to the following table:

	Base rail	Module row
Xpress	16.0 m	16.0 m
Classic	12.3 m	16.0 m

- In the event of exceptional circumstances (such as storms, heavy rain, earthquakes, etc.), the system should be checked by a specialist. Should an inspection find damage or plastic deformation (such as in the module clamp area) the components must be replaced.

Modules and clamping

- Tightening torque of 14 Nm for all module clamps.
- Adhere to module manufacturer recommendations for clamping area and module installation (see module manufacturer instructions). Check whether manufacturer approval is available for clamping on the short module side. See
  k2-systems.com/en/approved-modules-dome-6

General information

- External influences that act on this system are only reflected in the design of the ballast to a limited degree. For instance, unevenness, thermal elongation, moss, water accumulation and ageing of the sheeting cannot be considered, although these factors might also precipitate system displacement under certain circumstances. We therefore recommend regular maintenance of the system or to check whether additional mechanical fastening is necessary.
- It is important to ensure that the rain water flow is not hindered.
- Because of the different orientation of the solar modules, the string and inverter connection must be appropriately observed. It is recommended that the inverters and strings are connected separately.
- On-site general standards and regulations for lightning protection must be observed and consultation with a specialist to create a lightning protection concept is recommended (use lightning protection clamp if necessary).

Components

Base components: D-Dome 6 Xpress

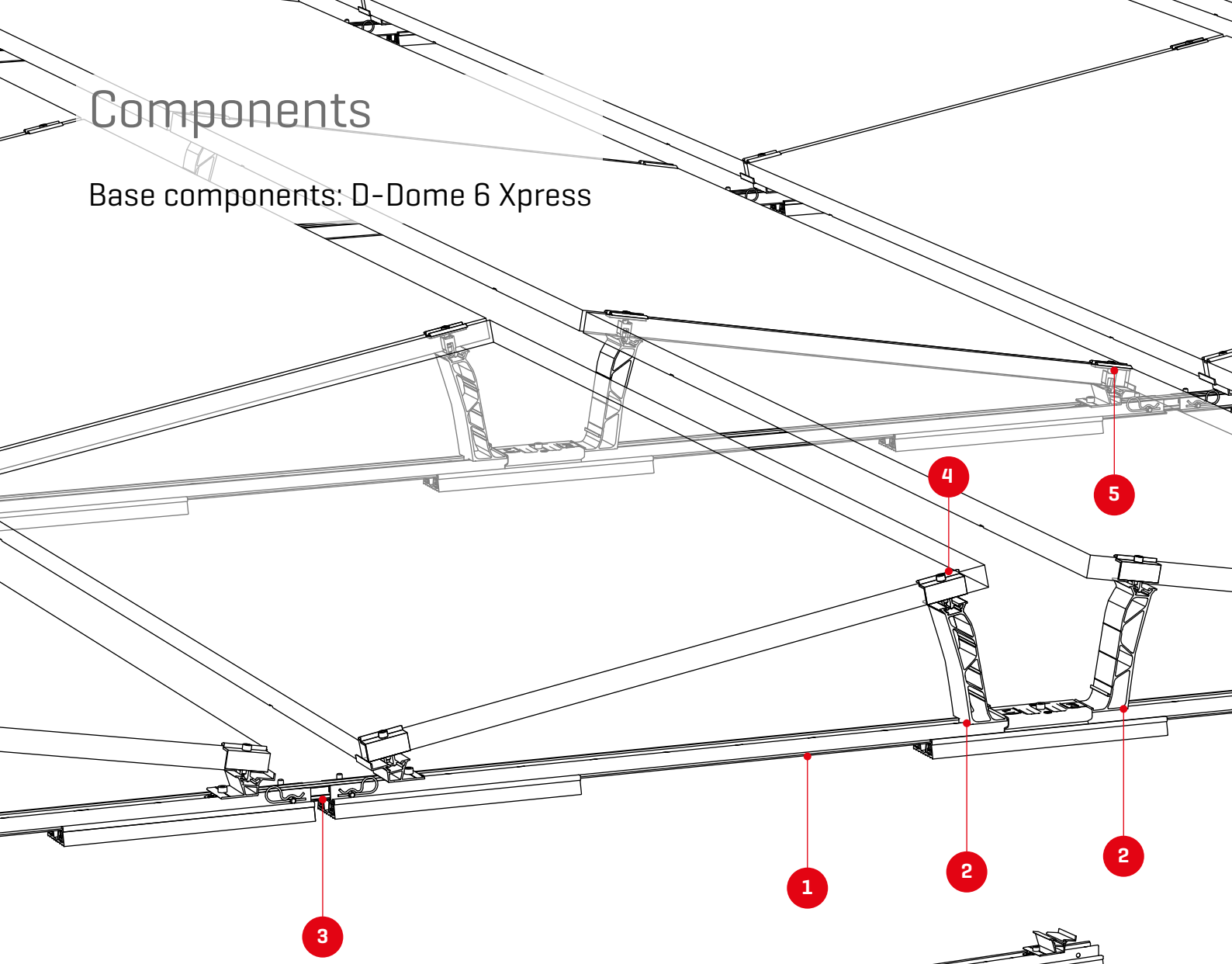

1 2004095
D-Dome 6.10 Base Set L

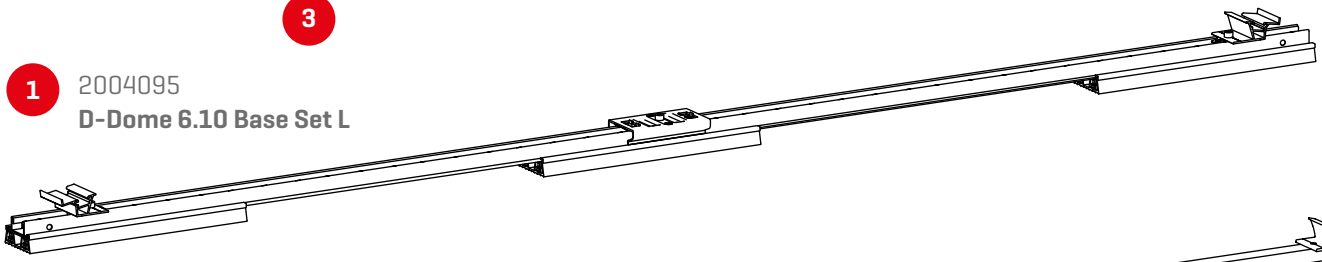

2004500
D-Dome 6.15 Base Set

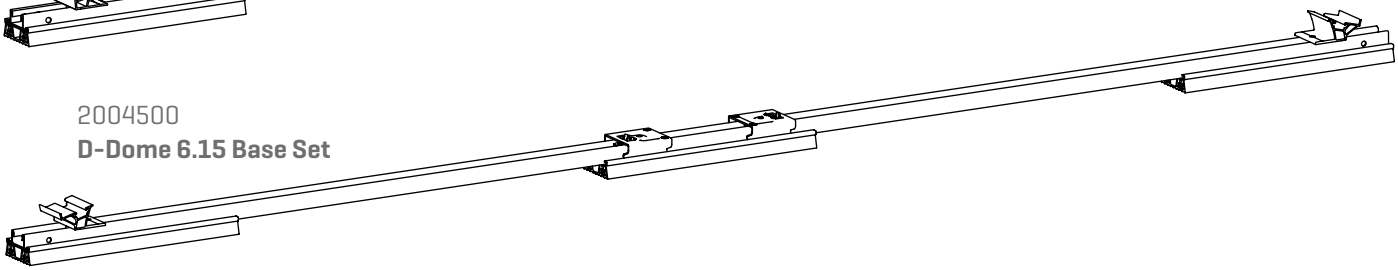

2 2004125
Dome 6.10 Peak

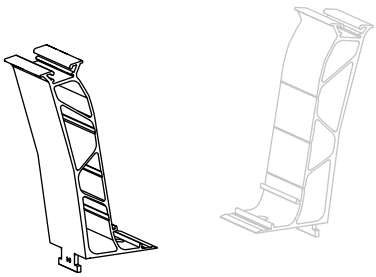

2004174
Dome 6.15 Peak

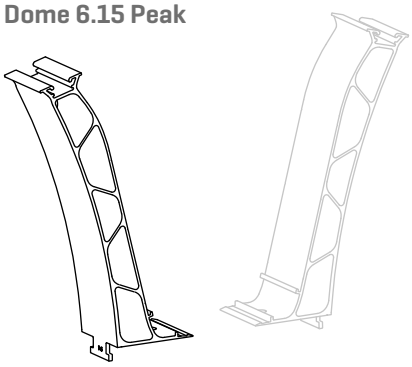

3 2004123
Dome 6 Connector 195 Set

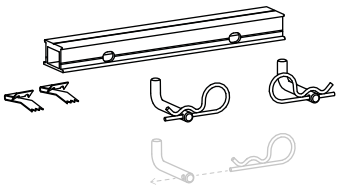

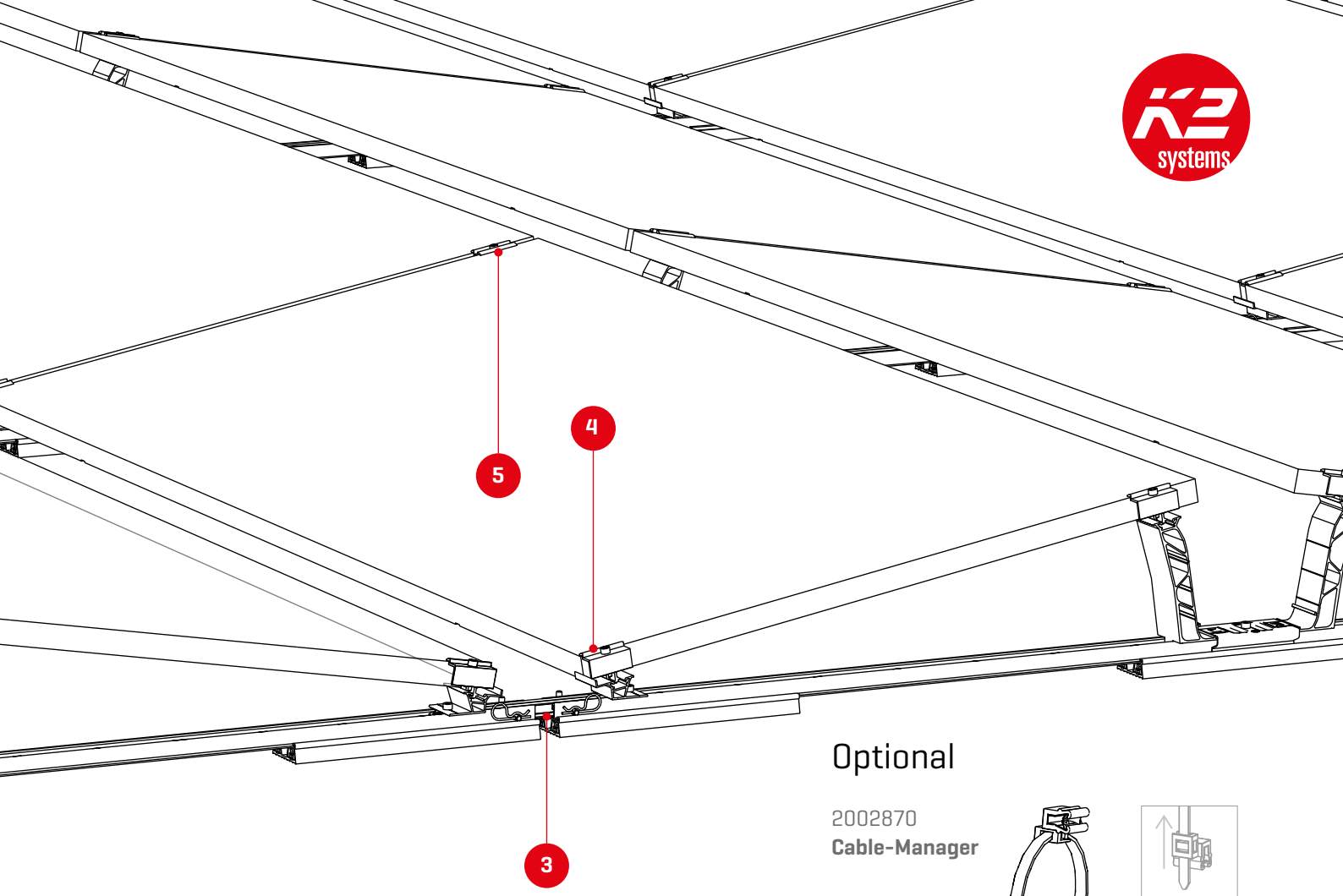

Optional

2002870
Cable-Manager

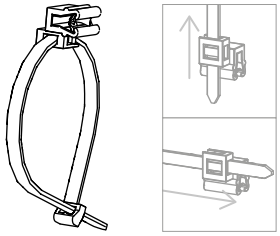

4 5 2002559 / 2002558
DomeClamp EC / MC

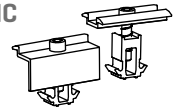

2003542
TerraGrif K2MI Duo 18

Dome 6 distance template

2004129
Dome Speed Spacer 2.50

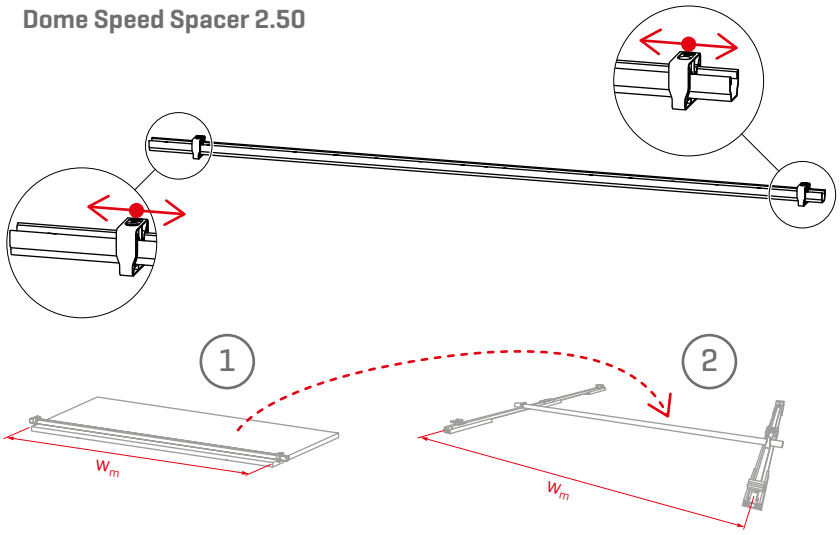

2004054 + 2003137
Performa Mesh Tray and PVX Multimount

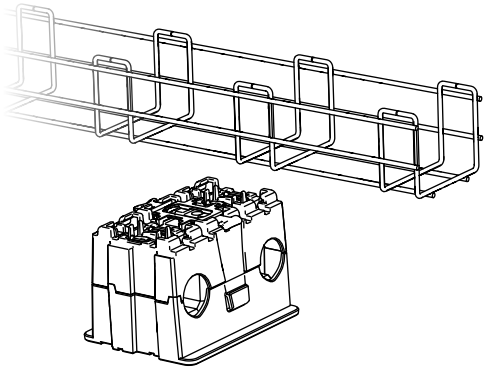

Components

Base components: D-Dome 6 Classic

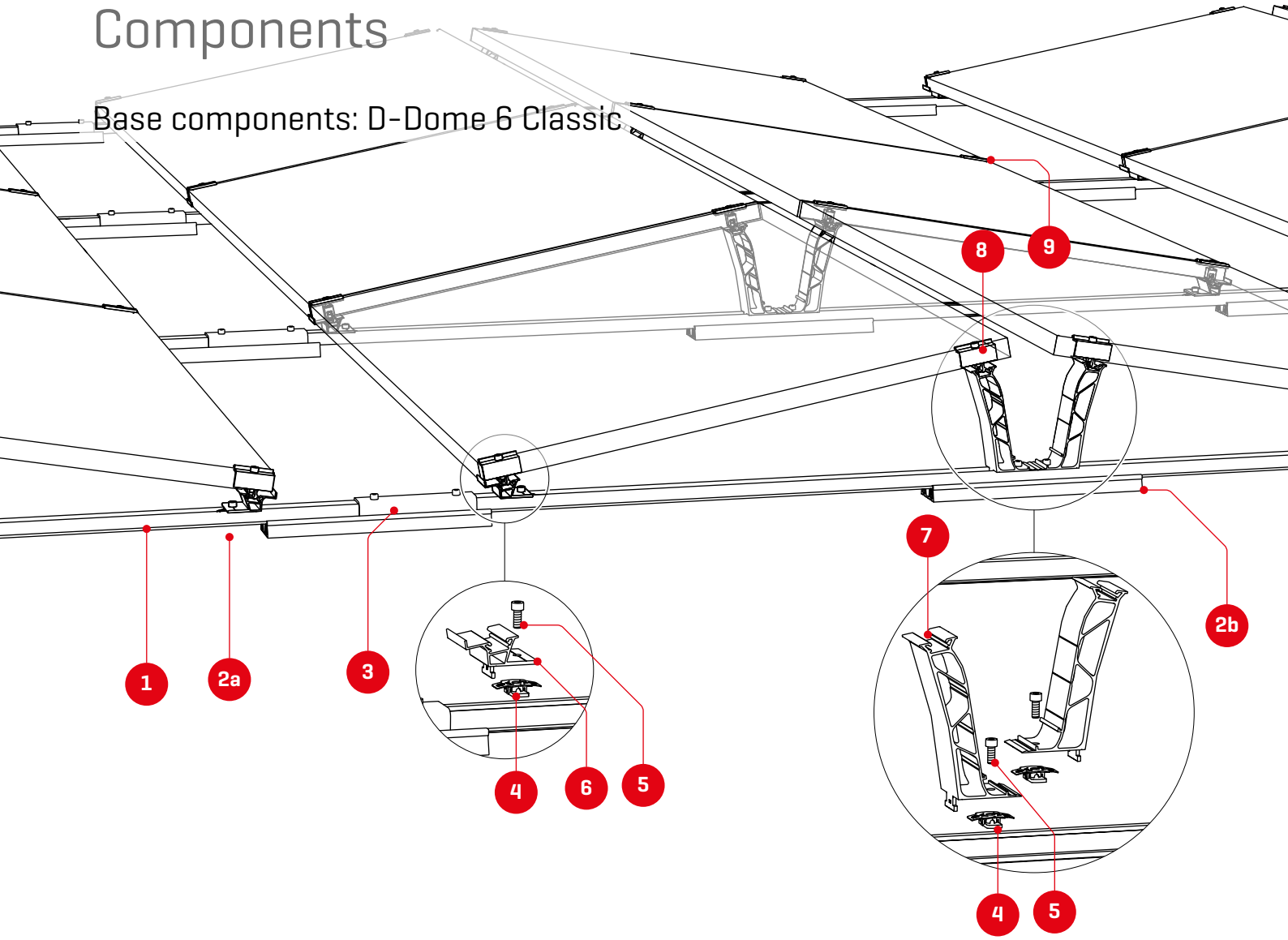

1 Article number system-specific
BasicRail 22

2a **2b** 2003126
Mat S

3 1006039
FlatConnector Set

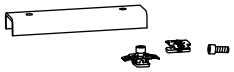

4 **5** 1001643 + 2001729
MK2 Slot nut with clip + Allen bolt M8×20

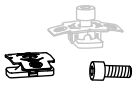

6 2003243
Dome 6.10 SD

7 2004125
Dome 6.10 Peak

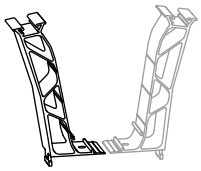

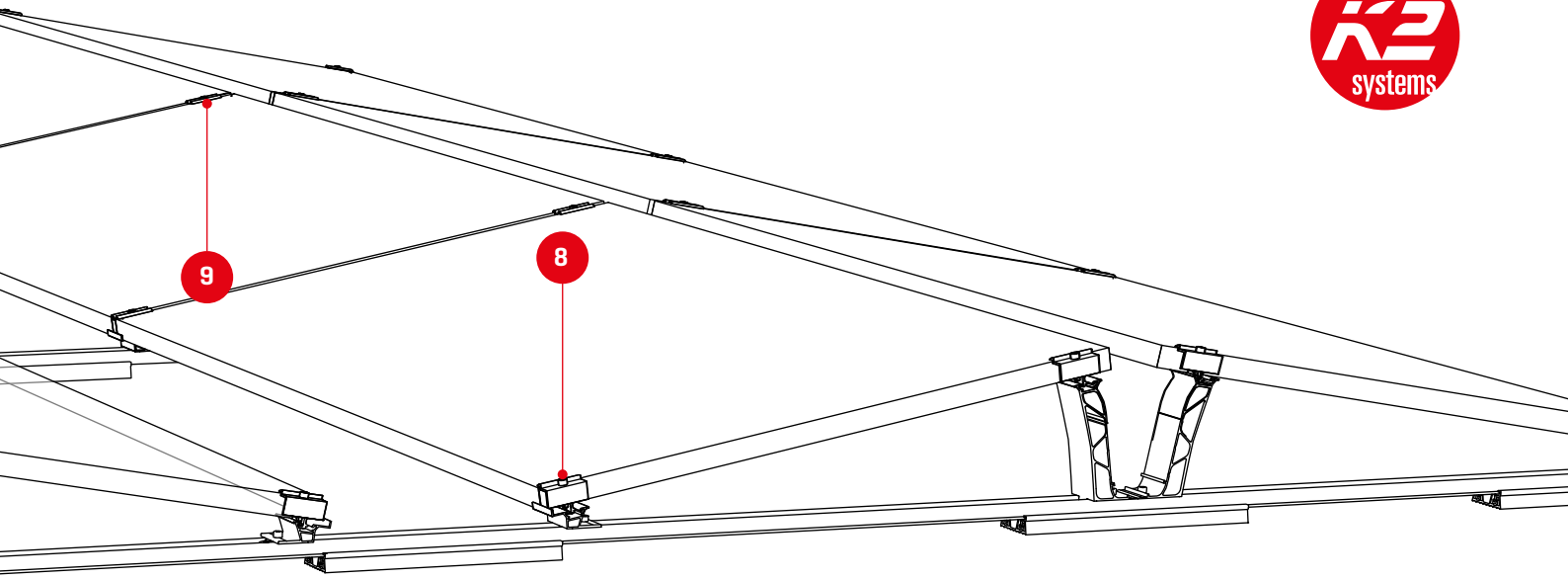

Dome 6 distance template

2004129
Dome Speed Spacer 2.50

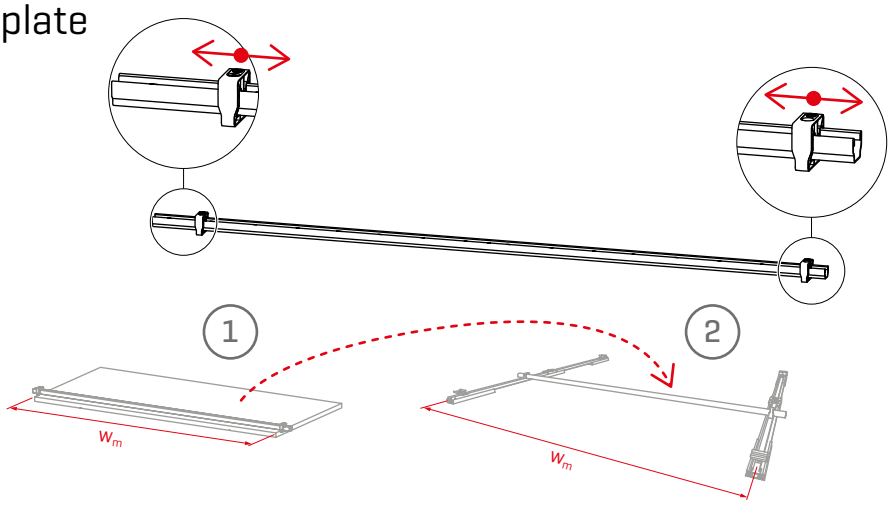

Optional

8 9 2002559 / 2002558
DomeClamp EC/MC

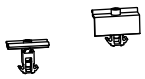

2002870
Cable-Manager

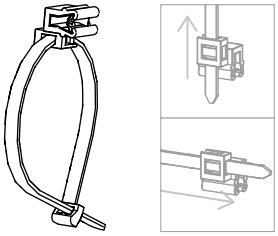

2003542
TerraGrif K2MI Duo 18

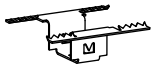

2004141
Mat S Tool

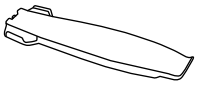

2004054 + 2003137
Performa Mesh Tray and PVX Multimount

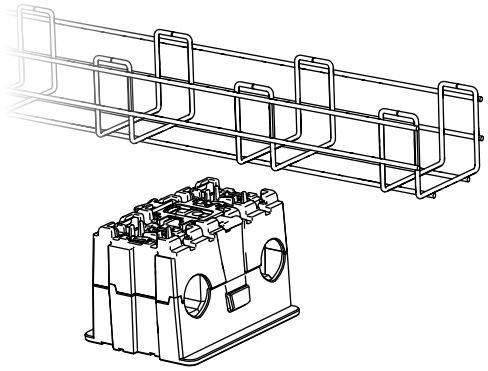

Components

Ballast

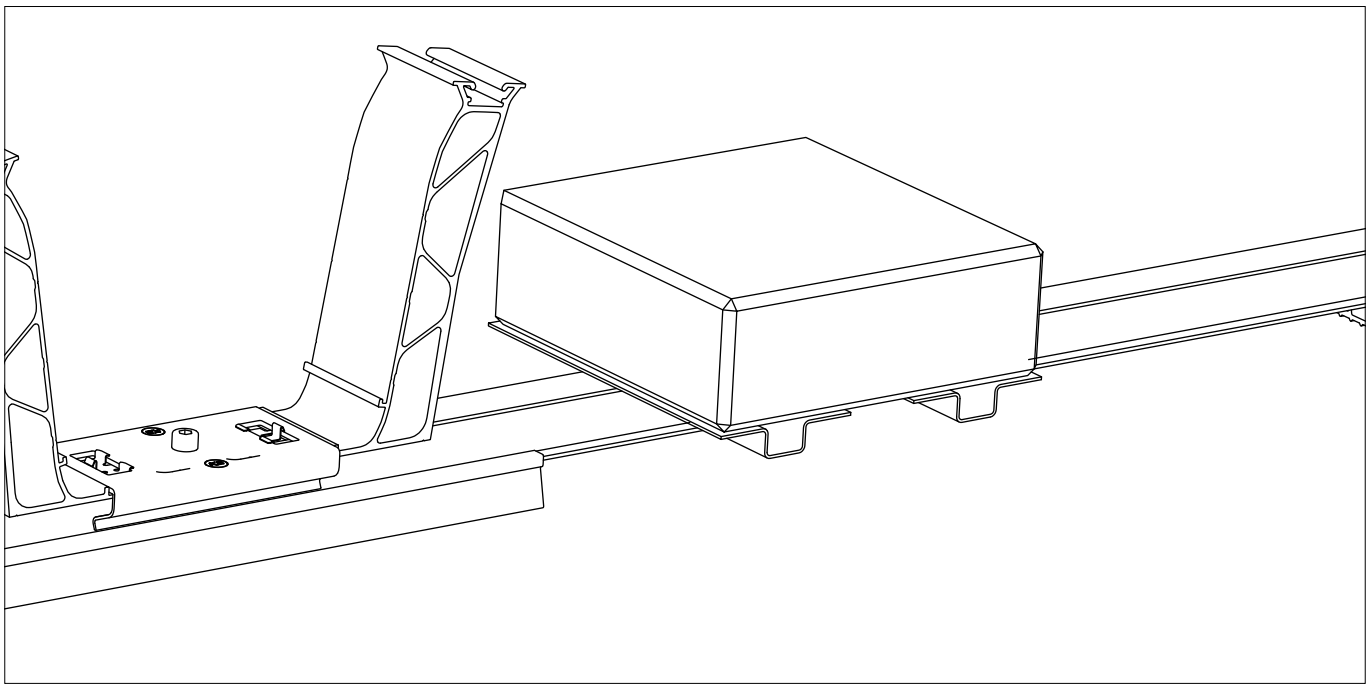

2002300
SpeedPorter

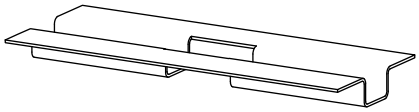

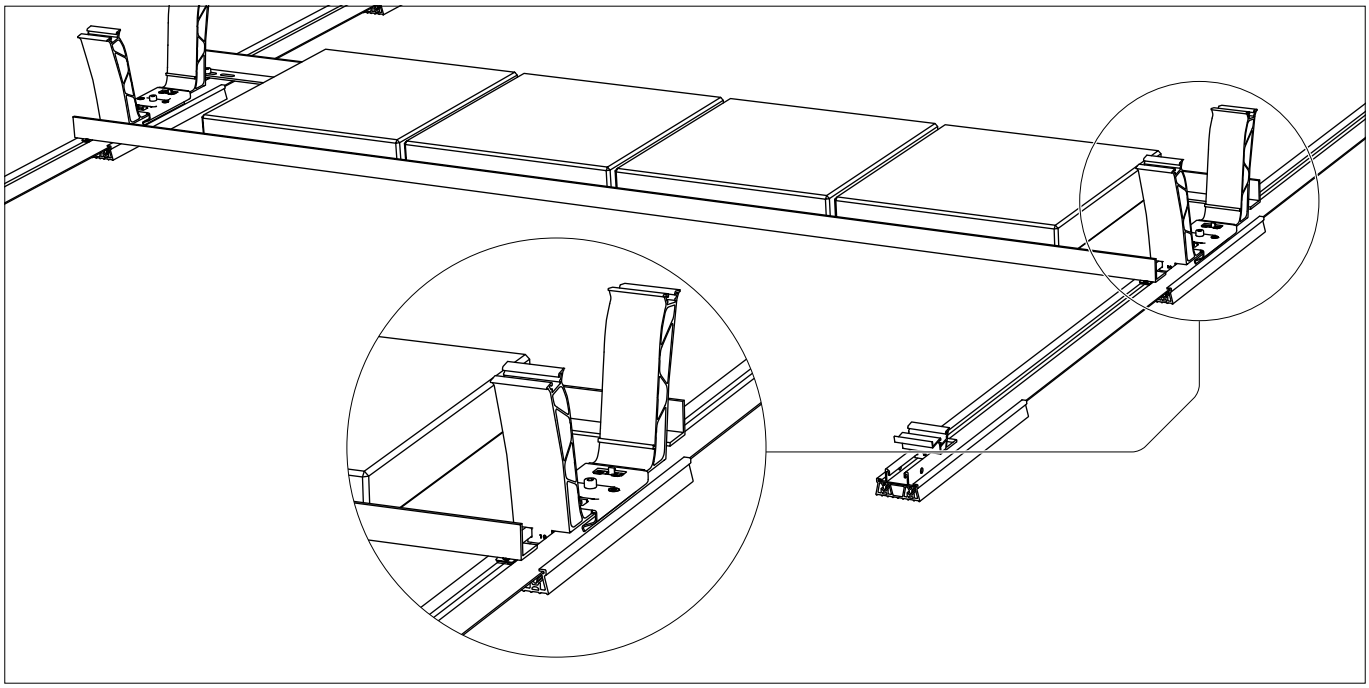

2003150 / 2003151 / 2004098
Porter Short / Long / X-tra Long

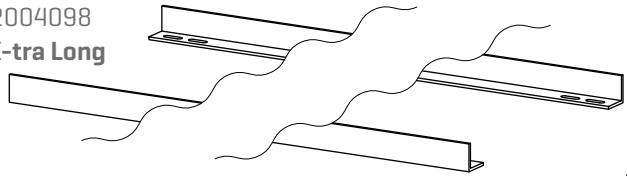

1001643 + 2001729
MK2 Slot nut with clip + Allen bolt M8×20

Fixed connection to the roof

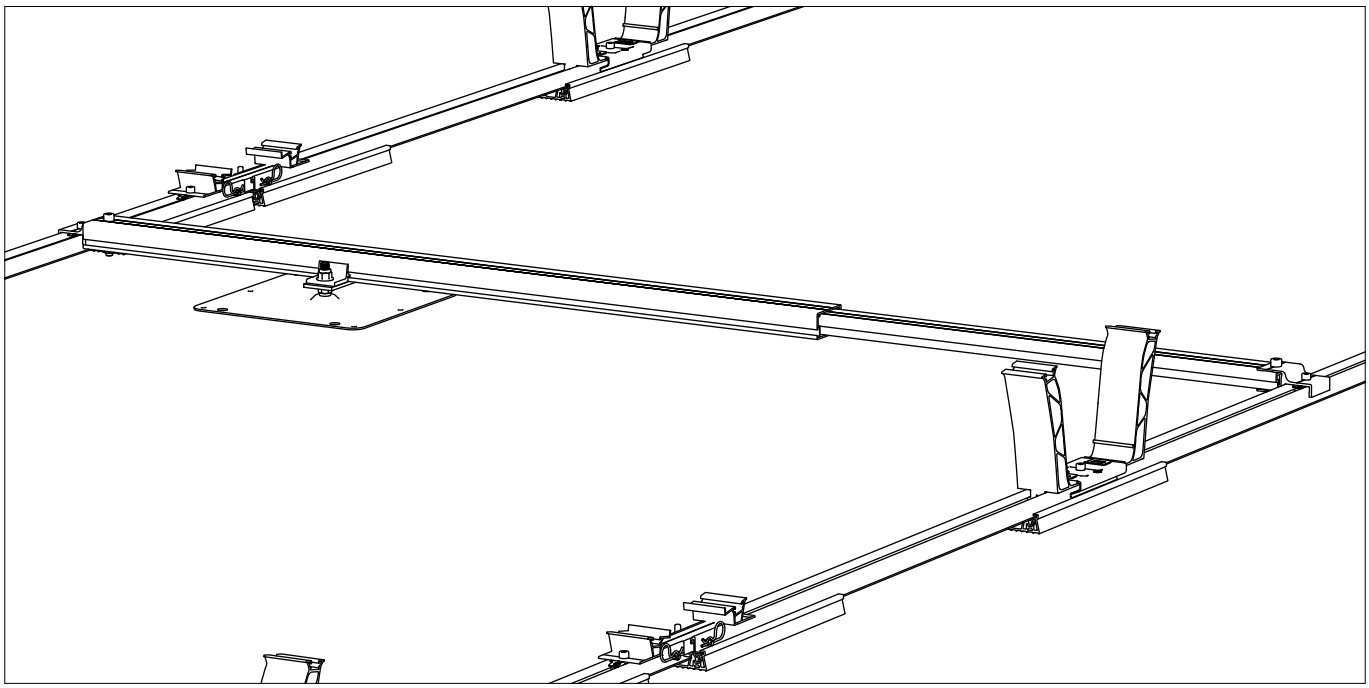

1 2004144
Dome FixPro L

2 2002546 / 2002547
Adapter plate M10/12

3 2003146 / 2003147
Climber M10/12

4 Other fastening elements (e.g. screws and nuts) for fixing to the fastener must be provided by the customer.

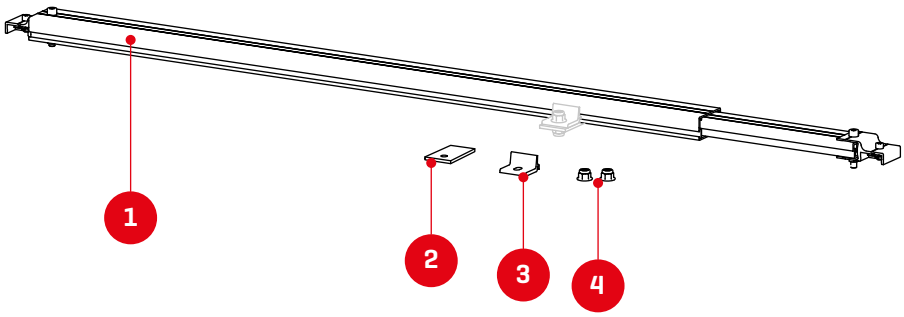

Assembly

Installation of module field and thermal separations

The minimum assembly values (S_{X1}/S_{Y1}) for the thermal separations of module blocks must not be undercut. In K2 Base, you set the distances between the module edges(S_{X2}/S_{Y2}) for planning. The K2 Base mounting plan outputs the automatically calculated mounting values depending on S_{X2}/S_{Y2}.

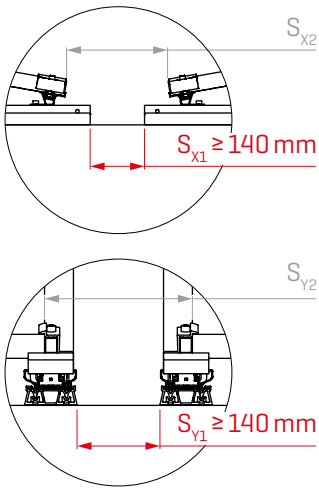

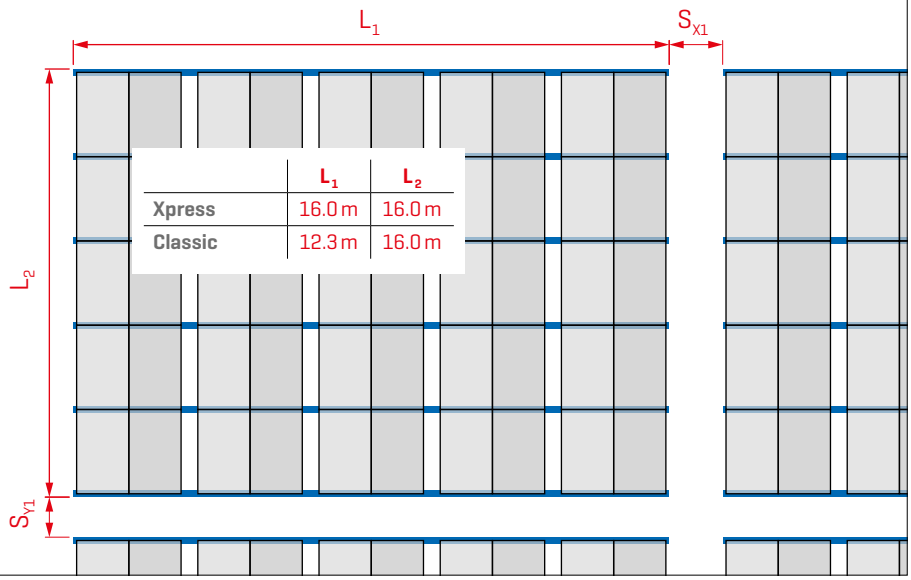

	L_1	L_2
Xpress	16.0 m	16.0 m
Classic	12.3 m	16.0 m

The module width w_m is adjusted with the narrow ends of the Dome Speed Spacer measuring clamps.

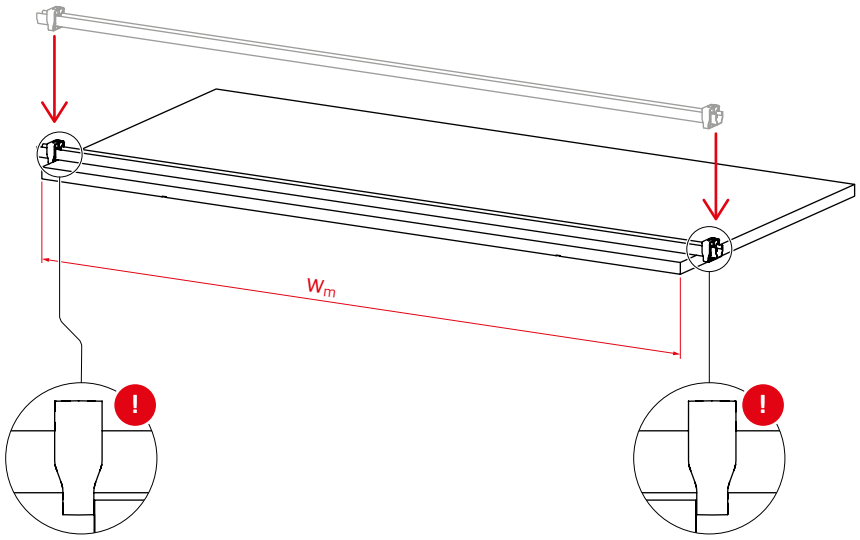

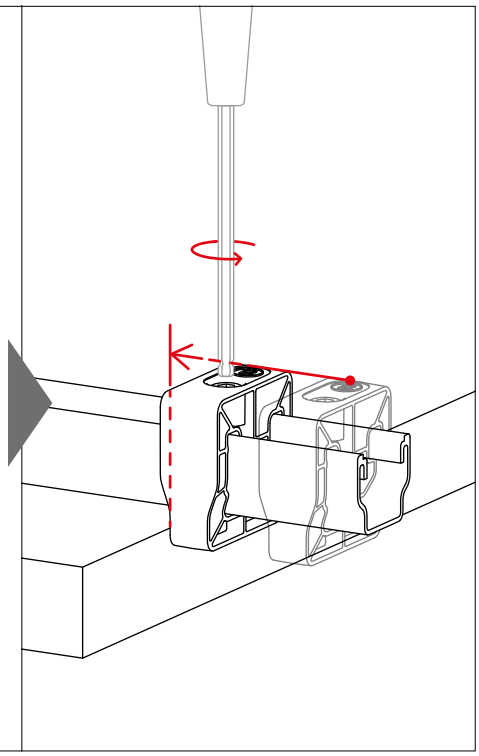

Module blocks with D-Dome 6 Xpress

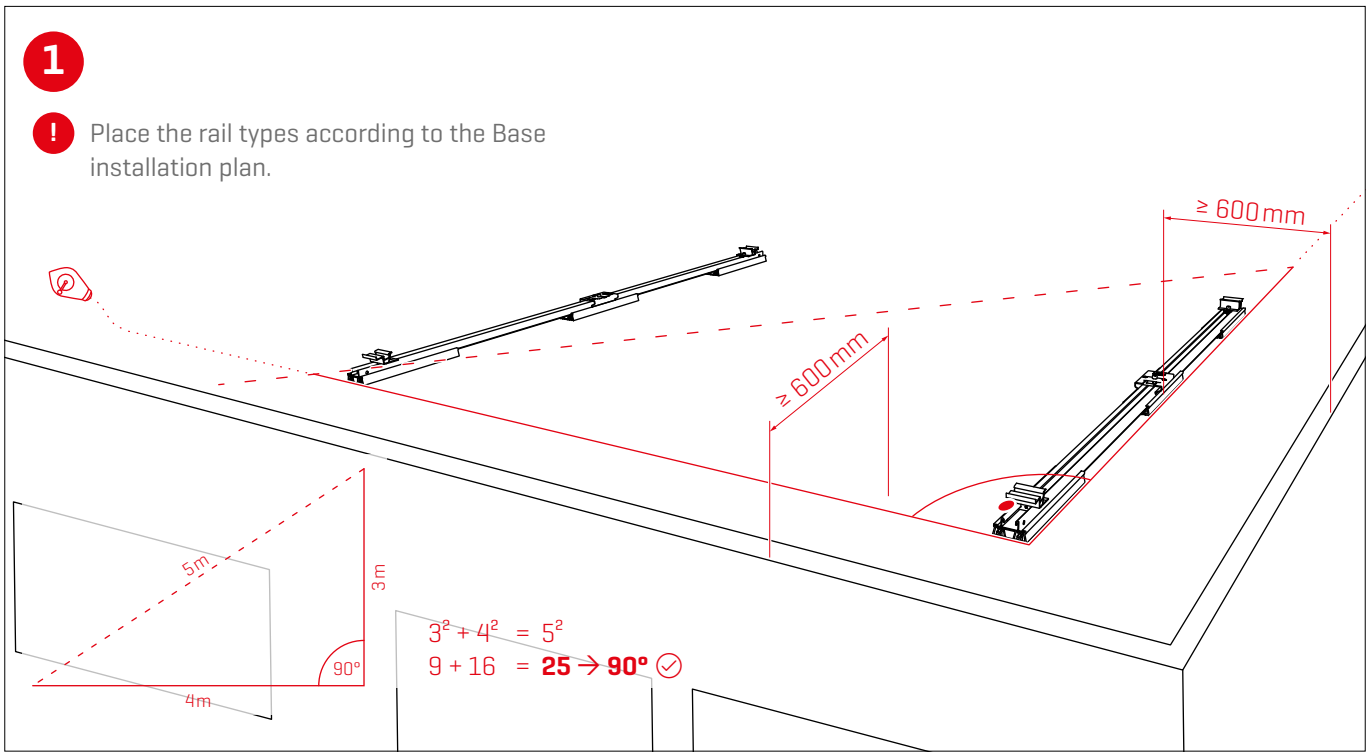

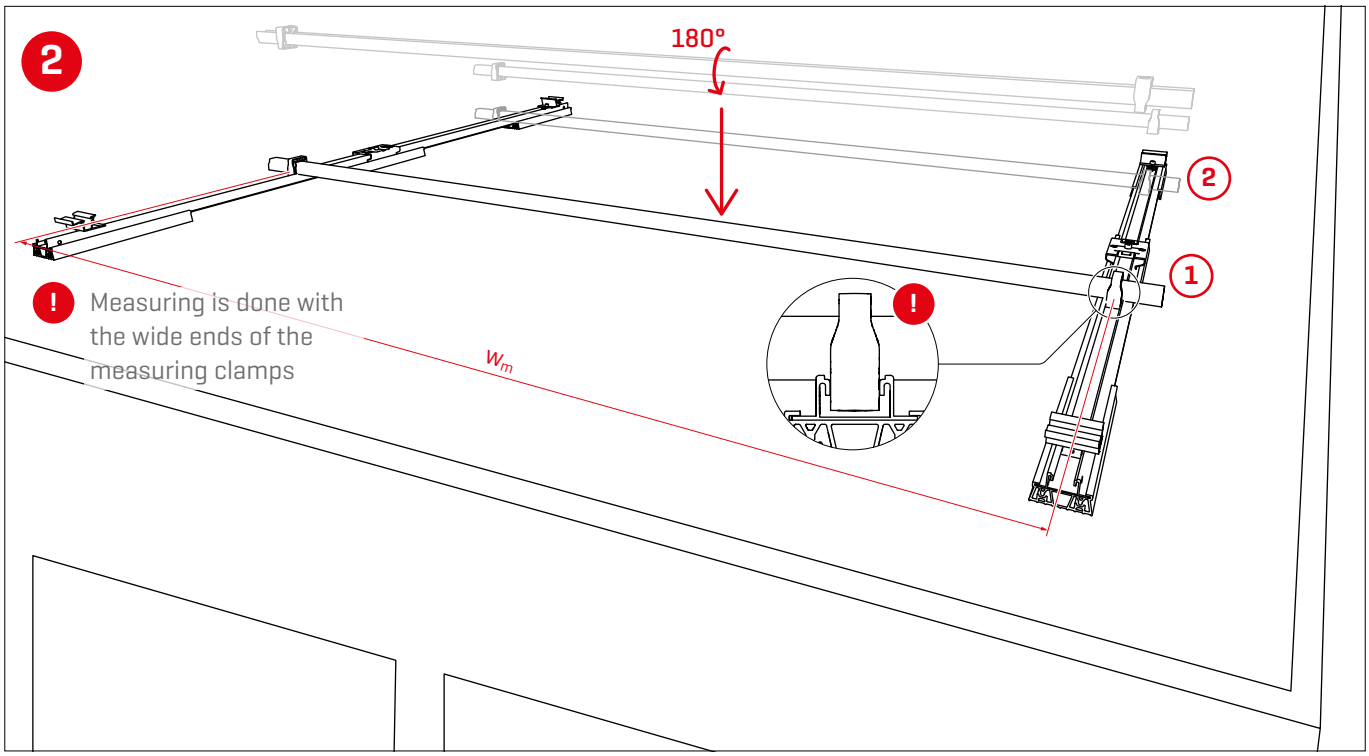

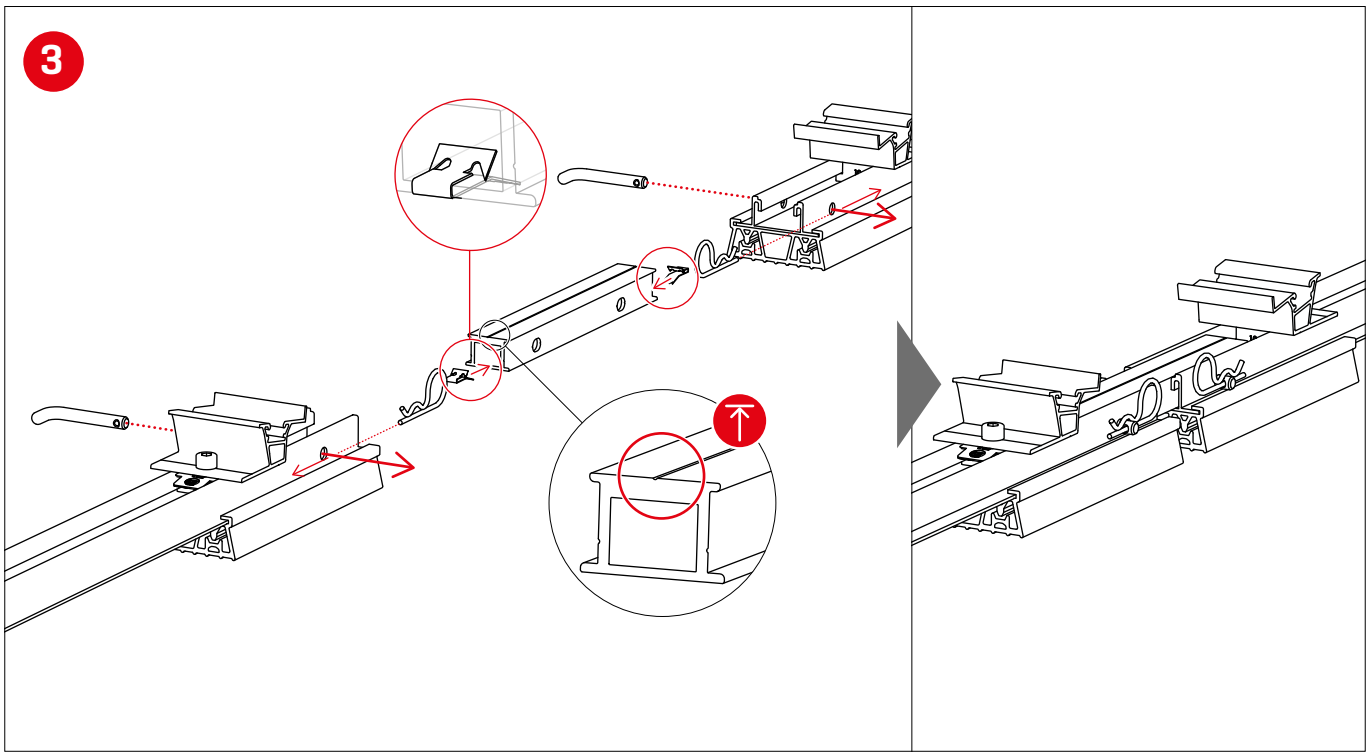
3

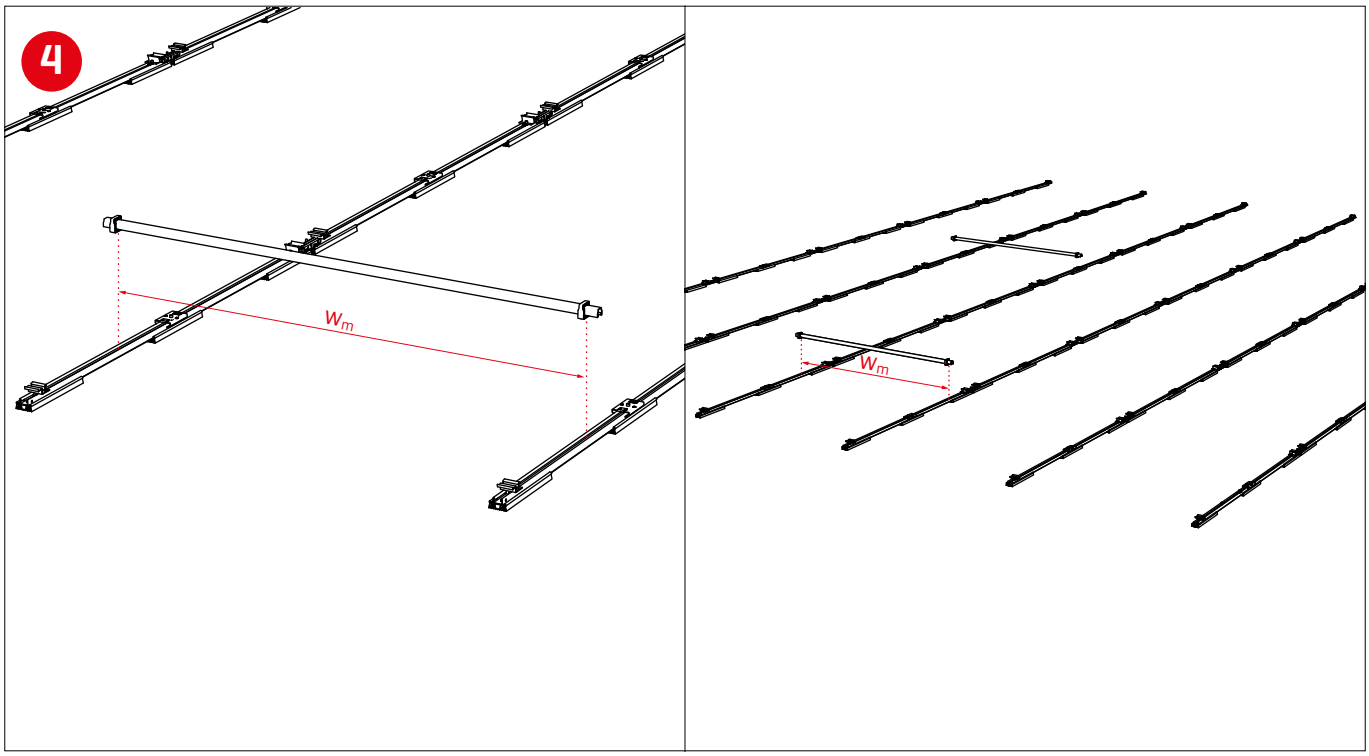
4
w_m
w_m

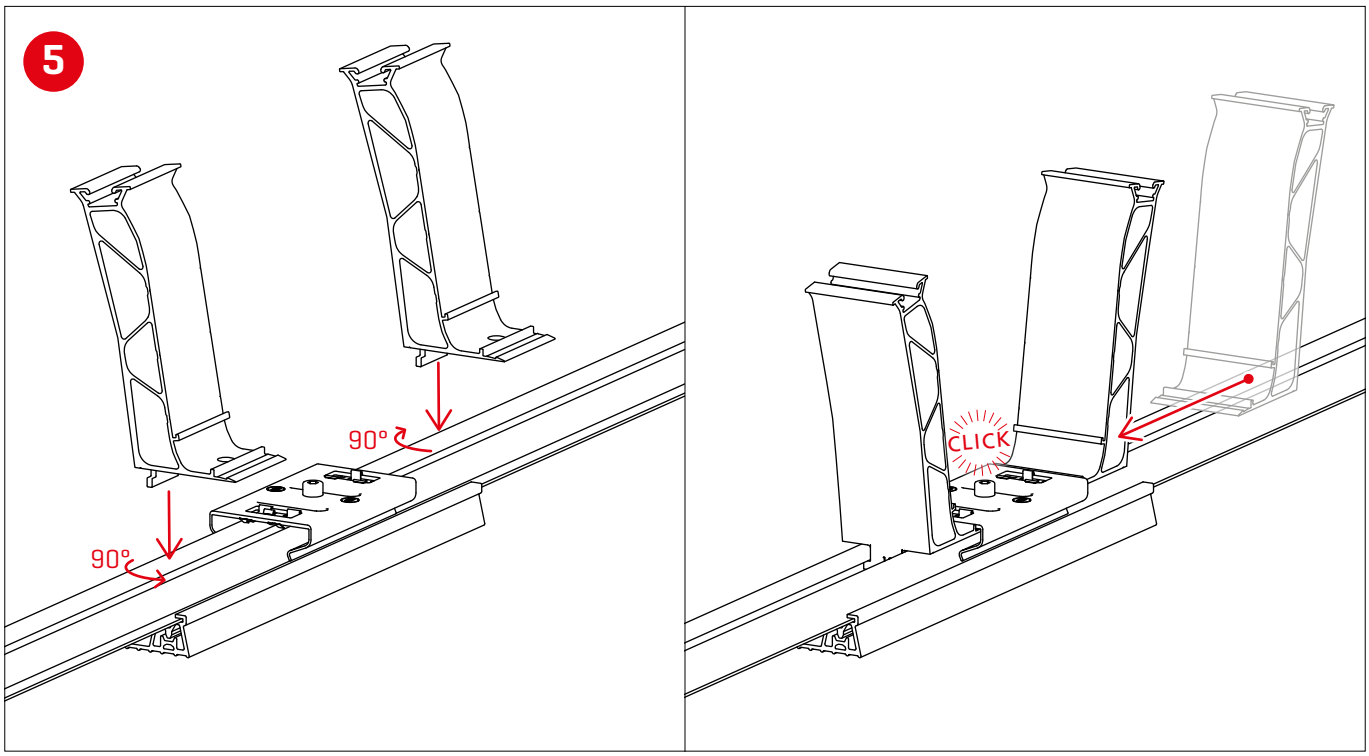
5
90°
90°
CLICK

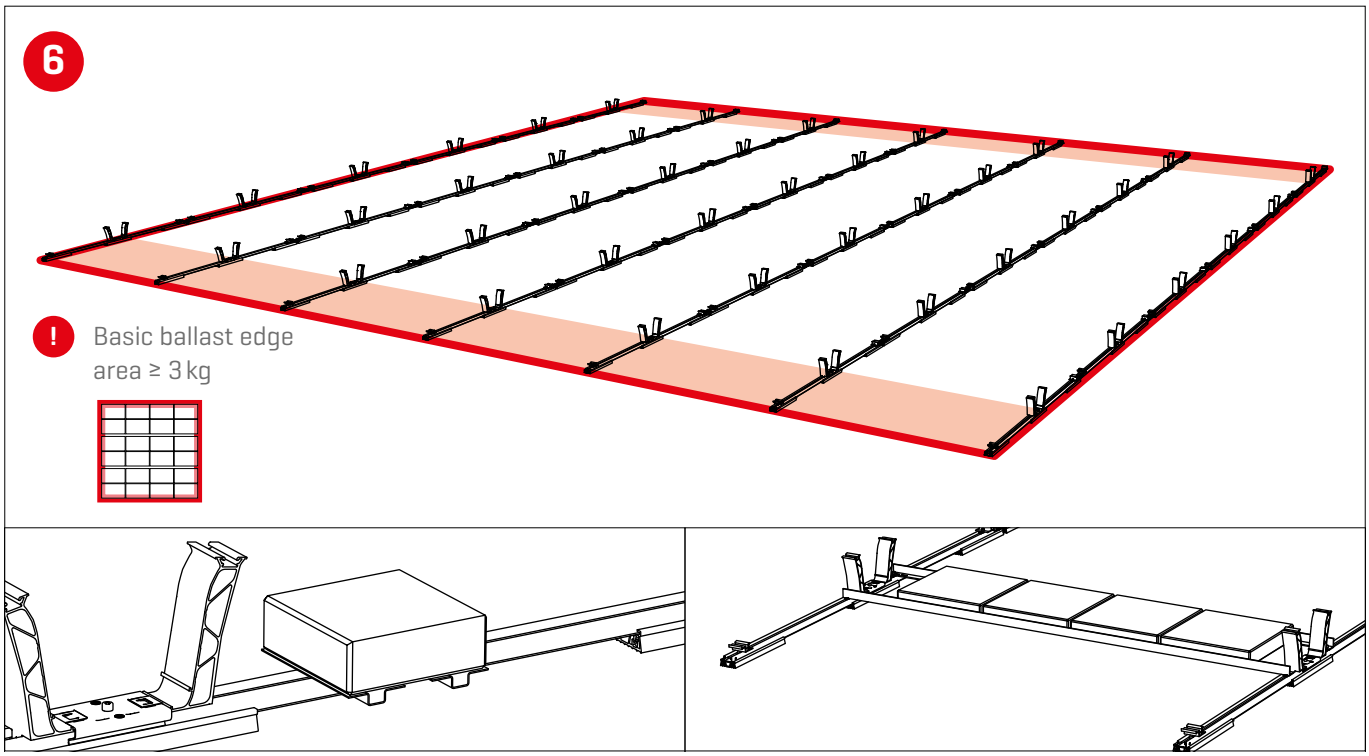
6
!
Basic ballast edge
area ≥ 3 kg

Module blocks with D-Dome 6 Classic

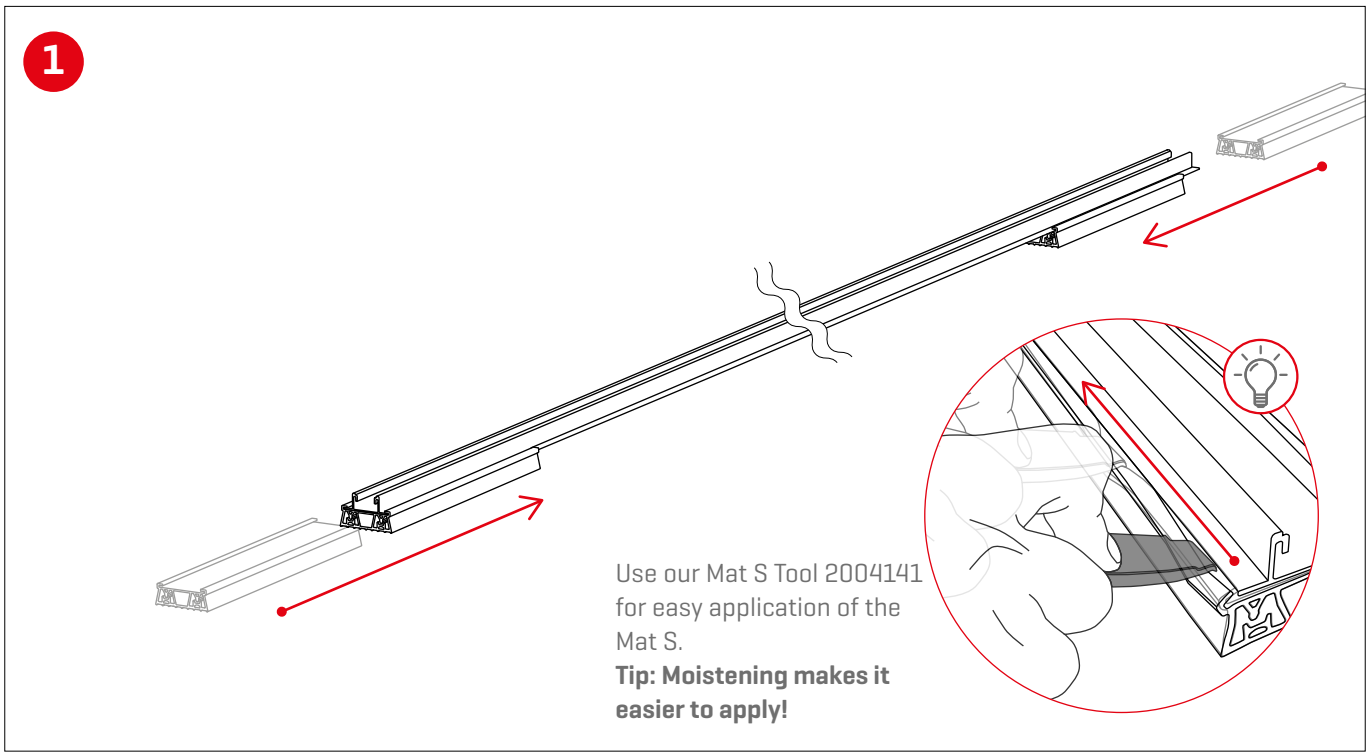

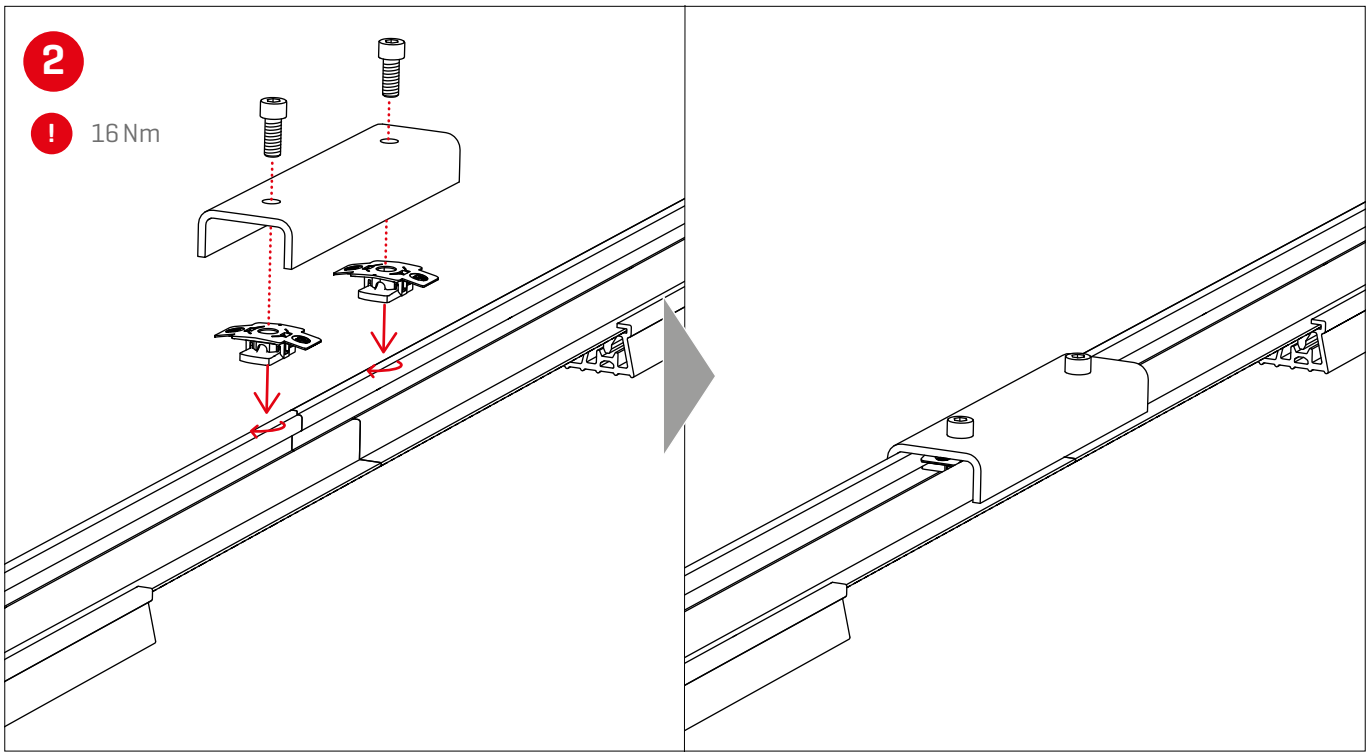

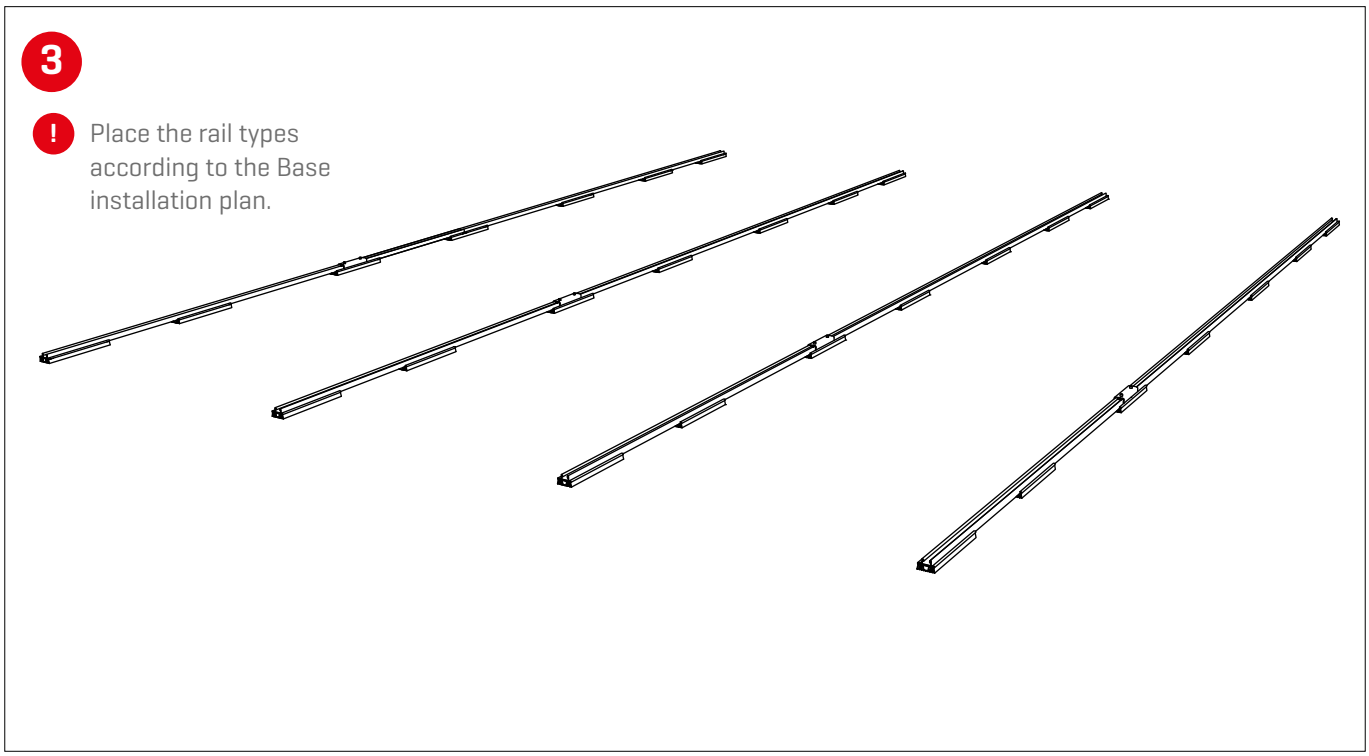
3
!
Place the rail types according to the Base installation plan.

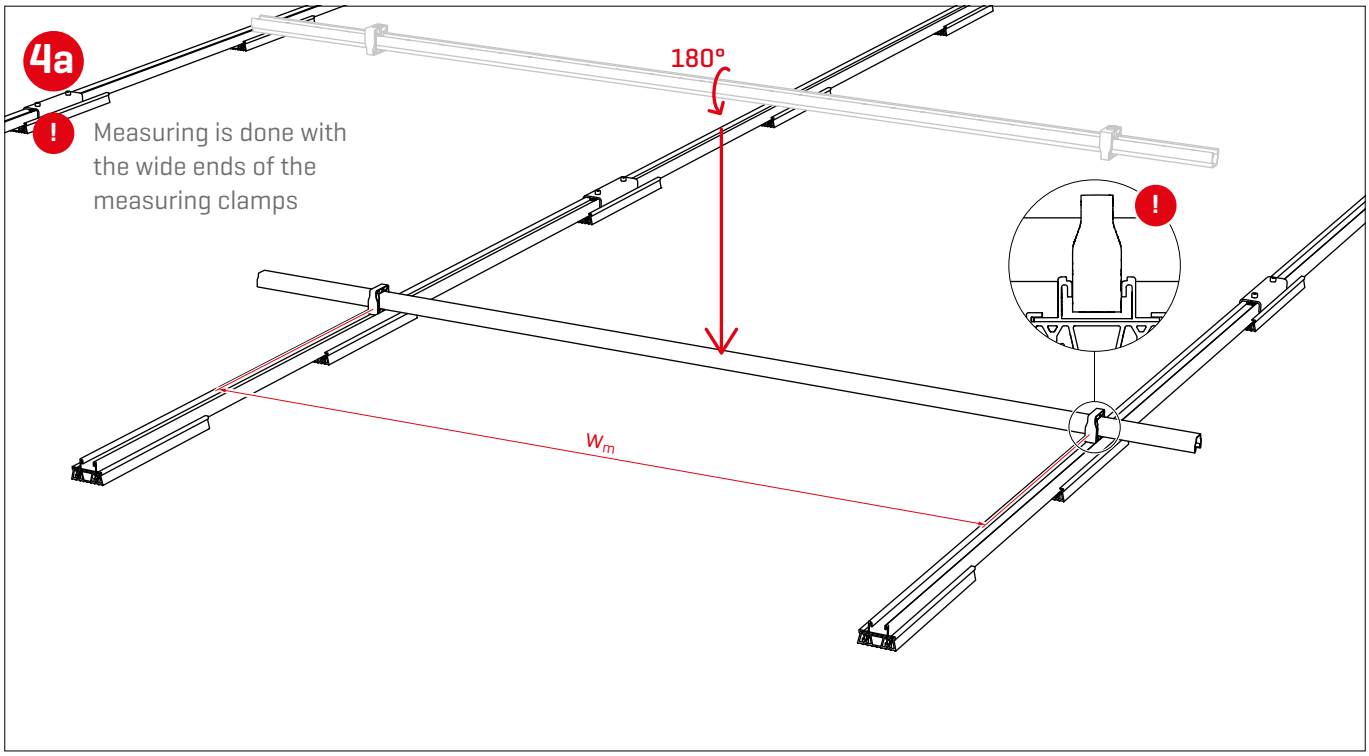
4a
!
Measuring is done with the wide ends of the measuring clamps
180°
!
w_m

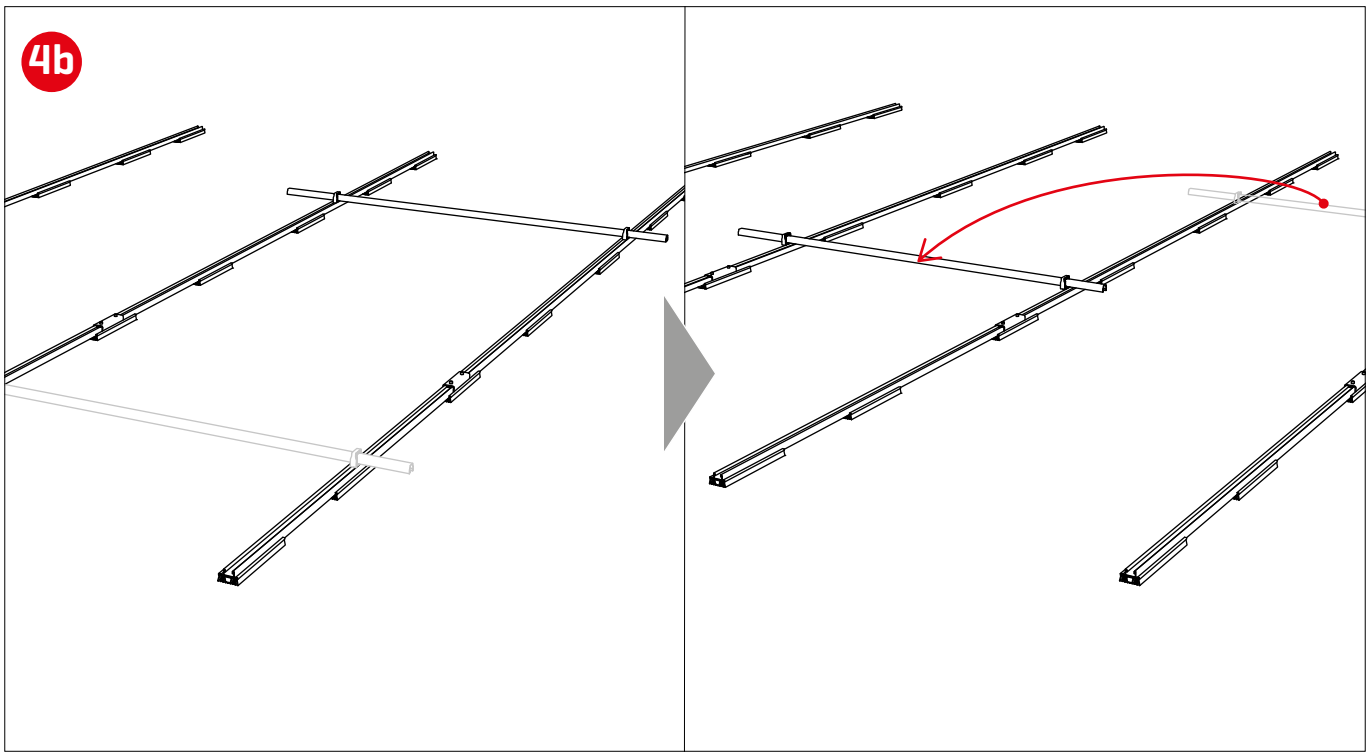
4b

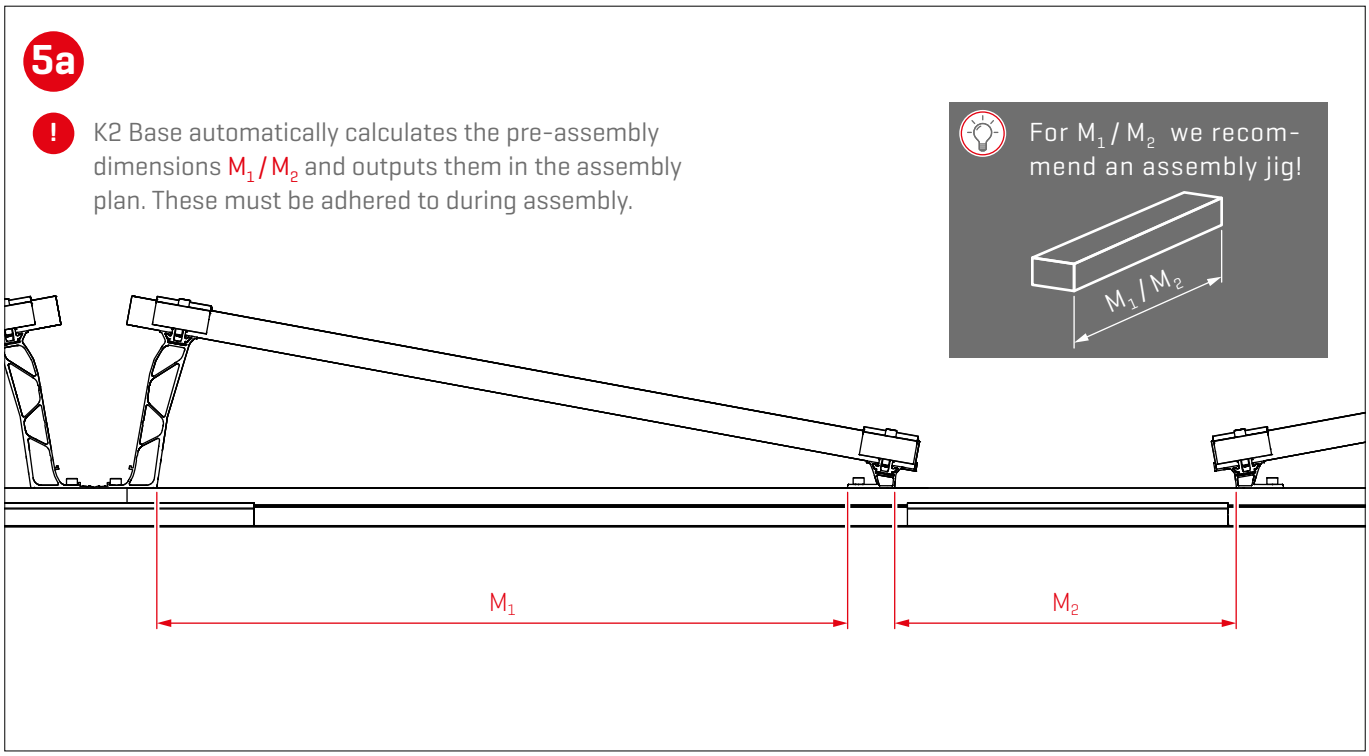
5a
! K2 Base automatically calculates the pre-assembly dimensions M_1 / M_2 and outputs them in the assembly plan. These must be adhered to during assembly.
For M_1 / M_2 we recommend an assembly jig!
M_1 / M_2
M_1
M_2

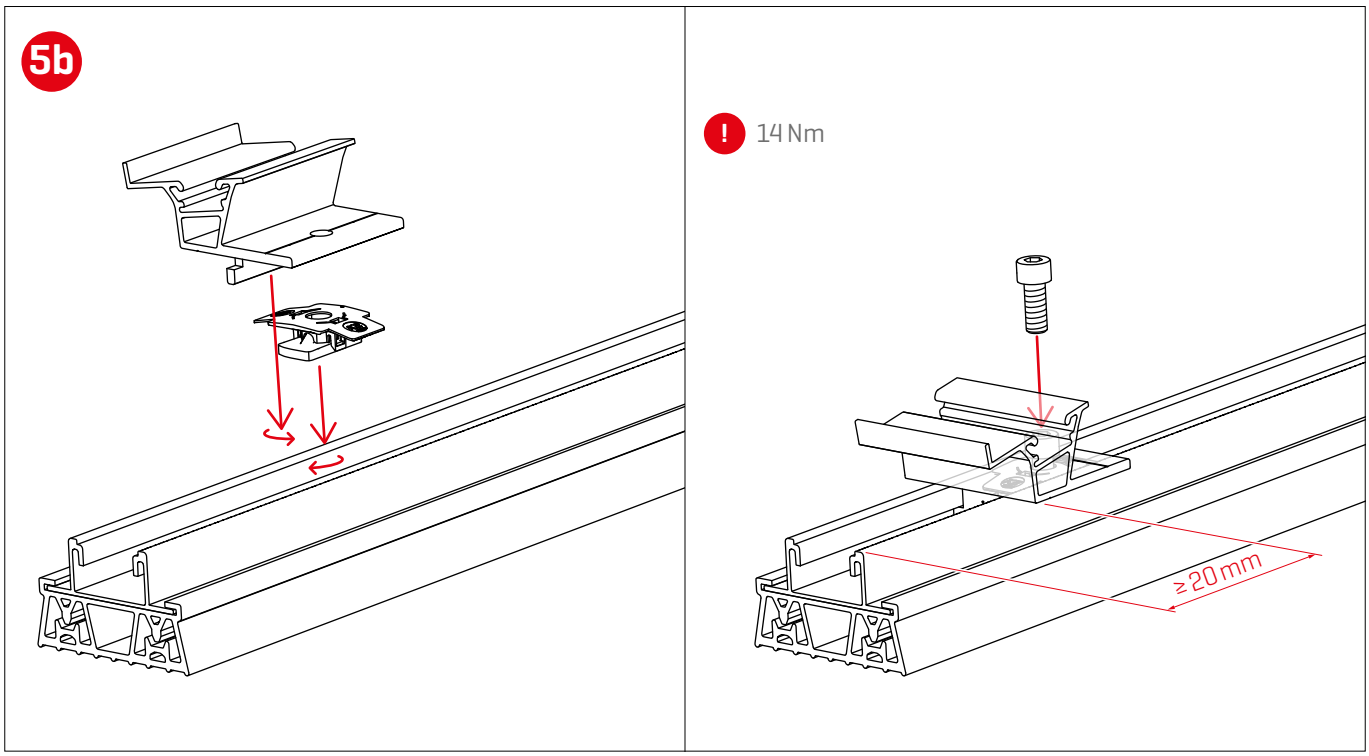
5b
!
14 Nm
≥ 20 mm

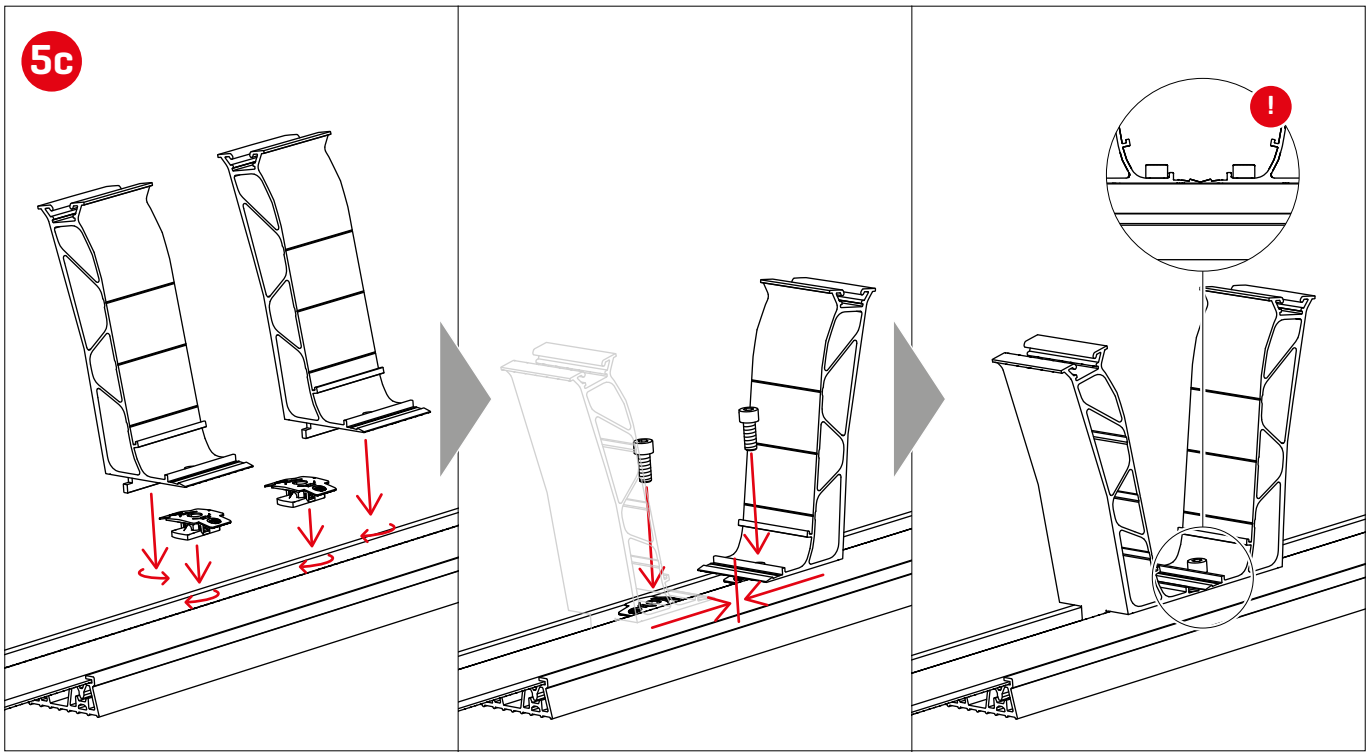
5c
!

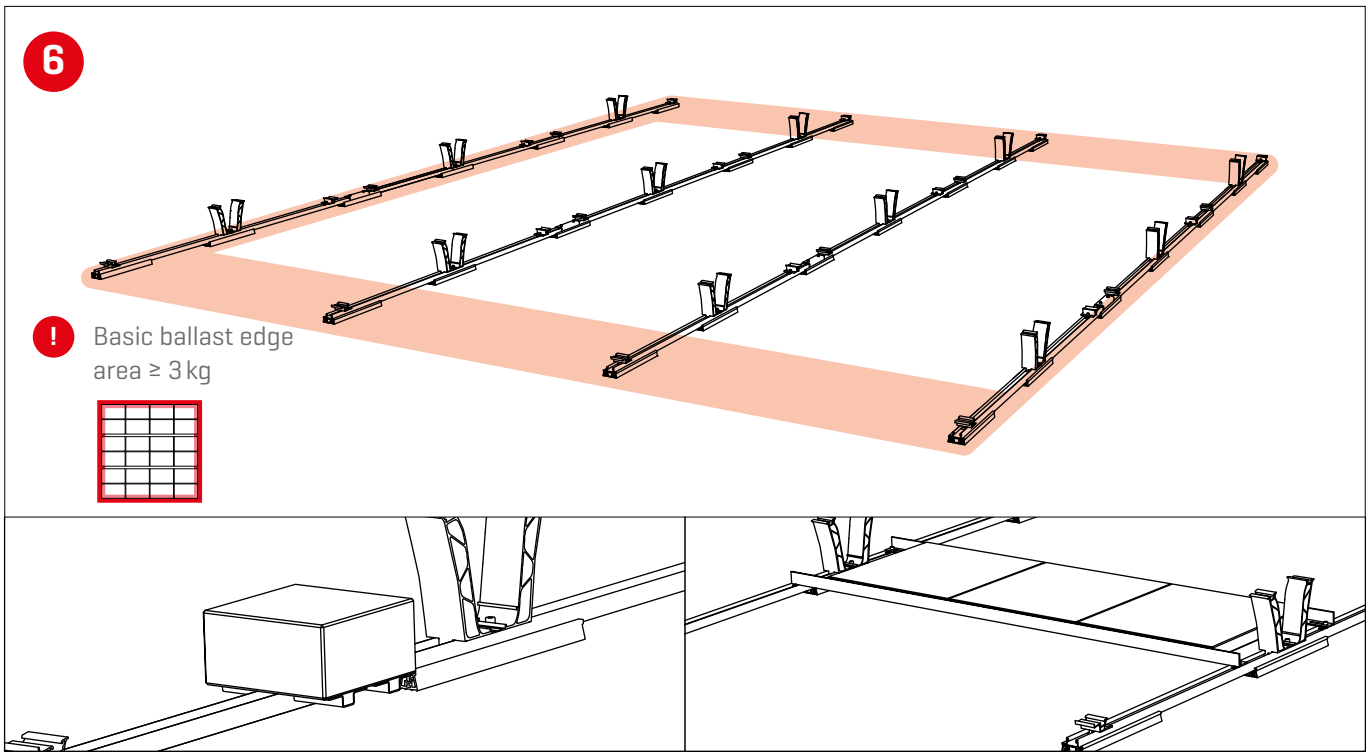
6
!
Basic ballast edge
area ≥ 3 kg

Ballasting options and specifications

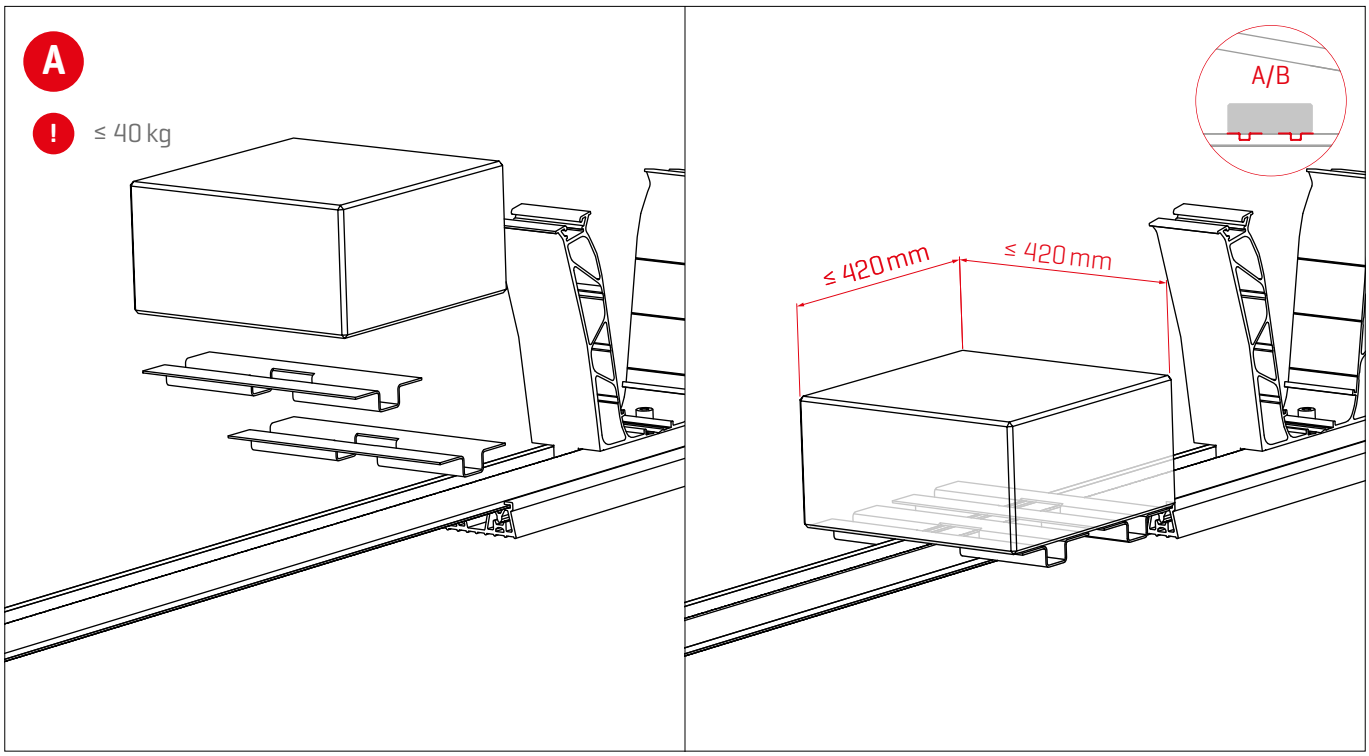

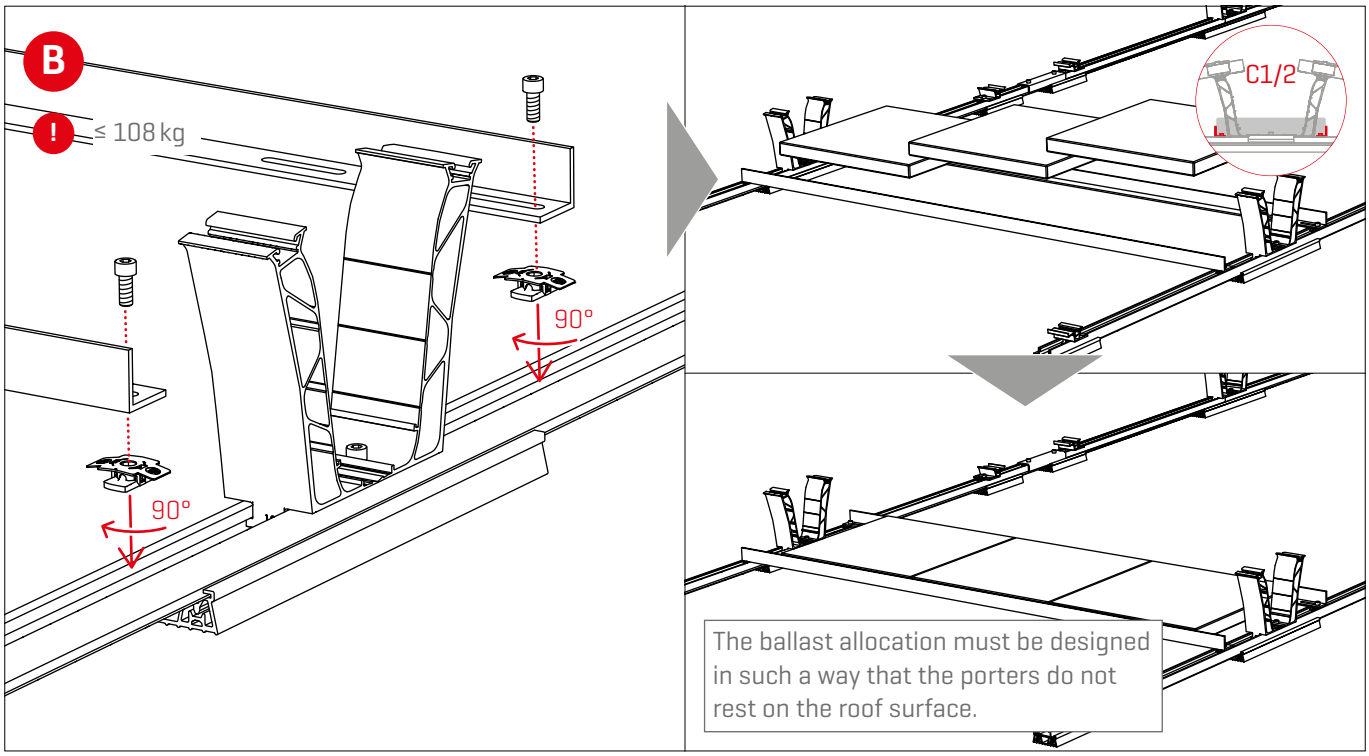

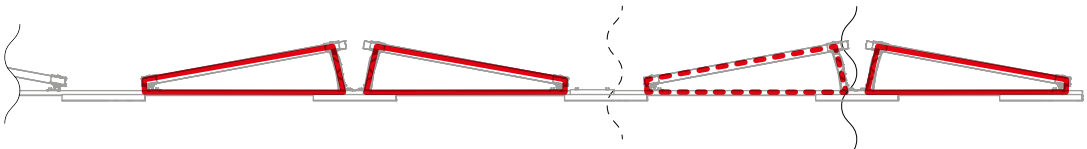

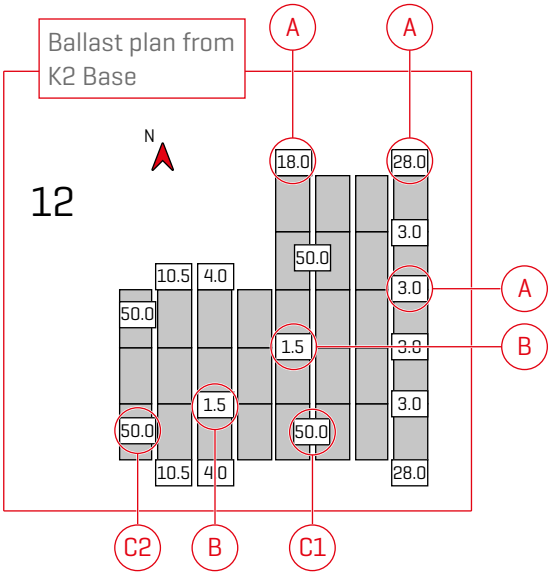

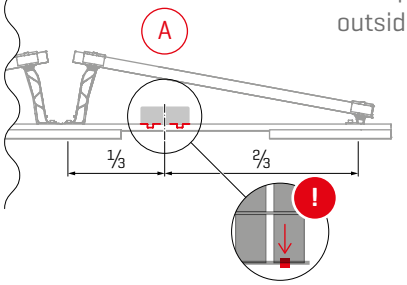

! If module in edge area, place ballast outside!

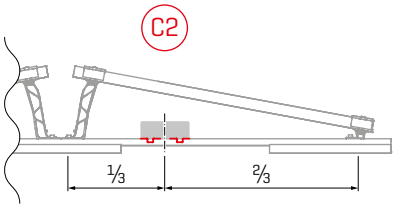

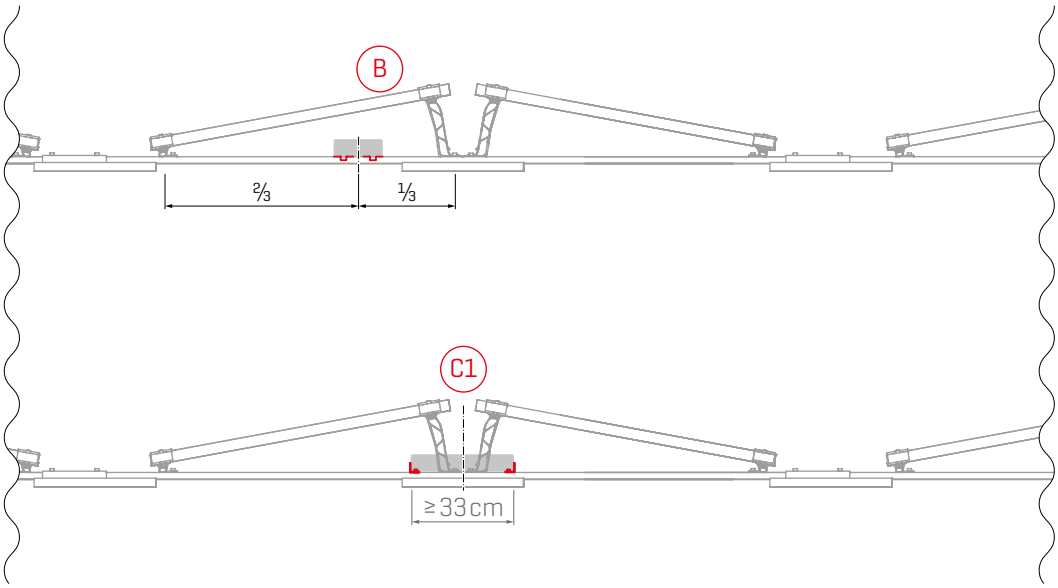

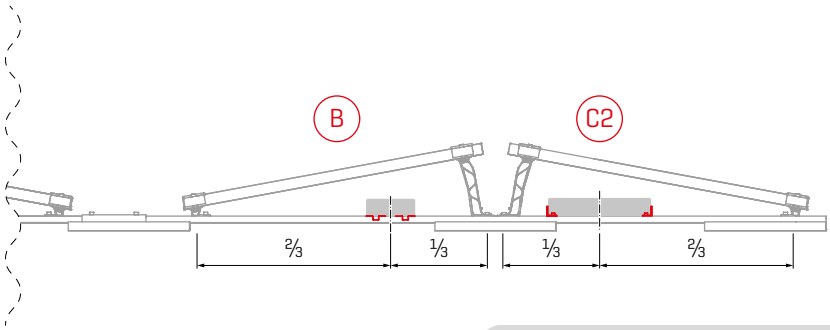

Module assembly

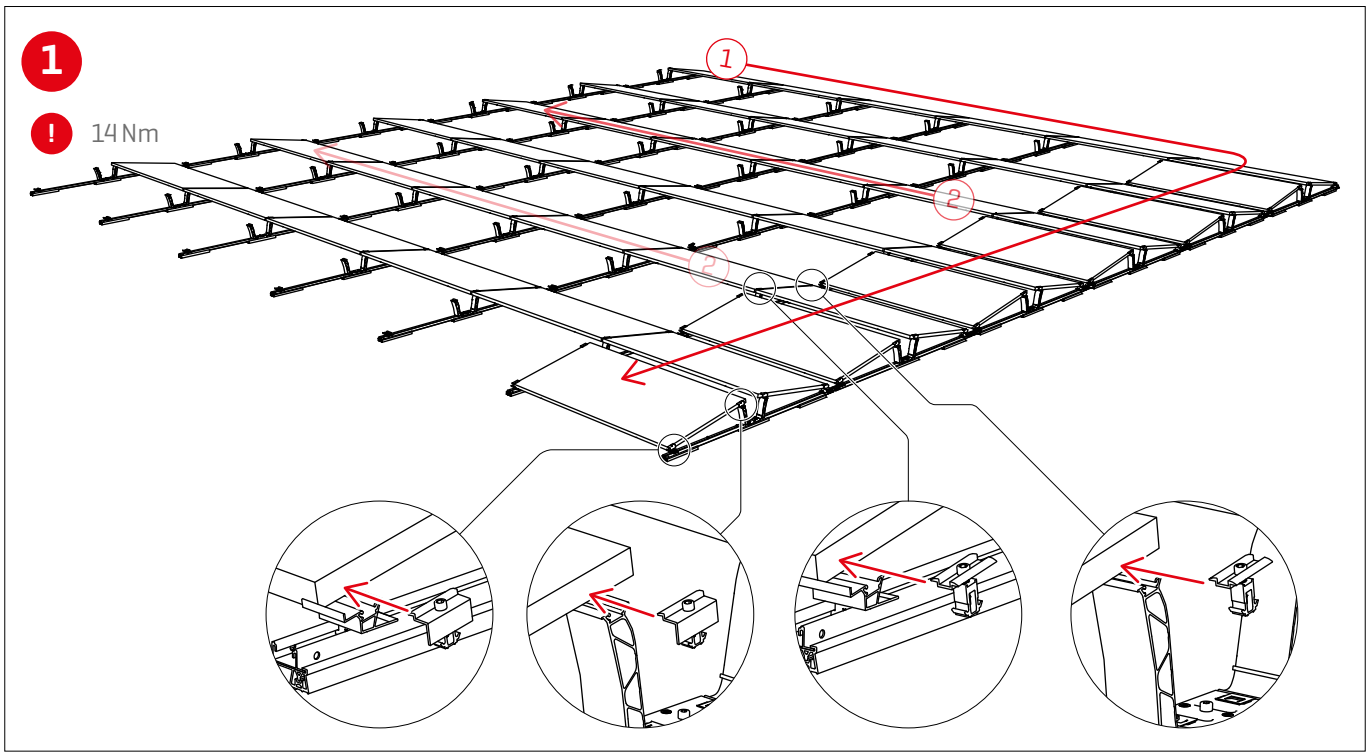

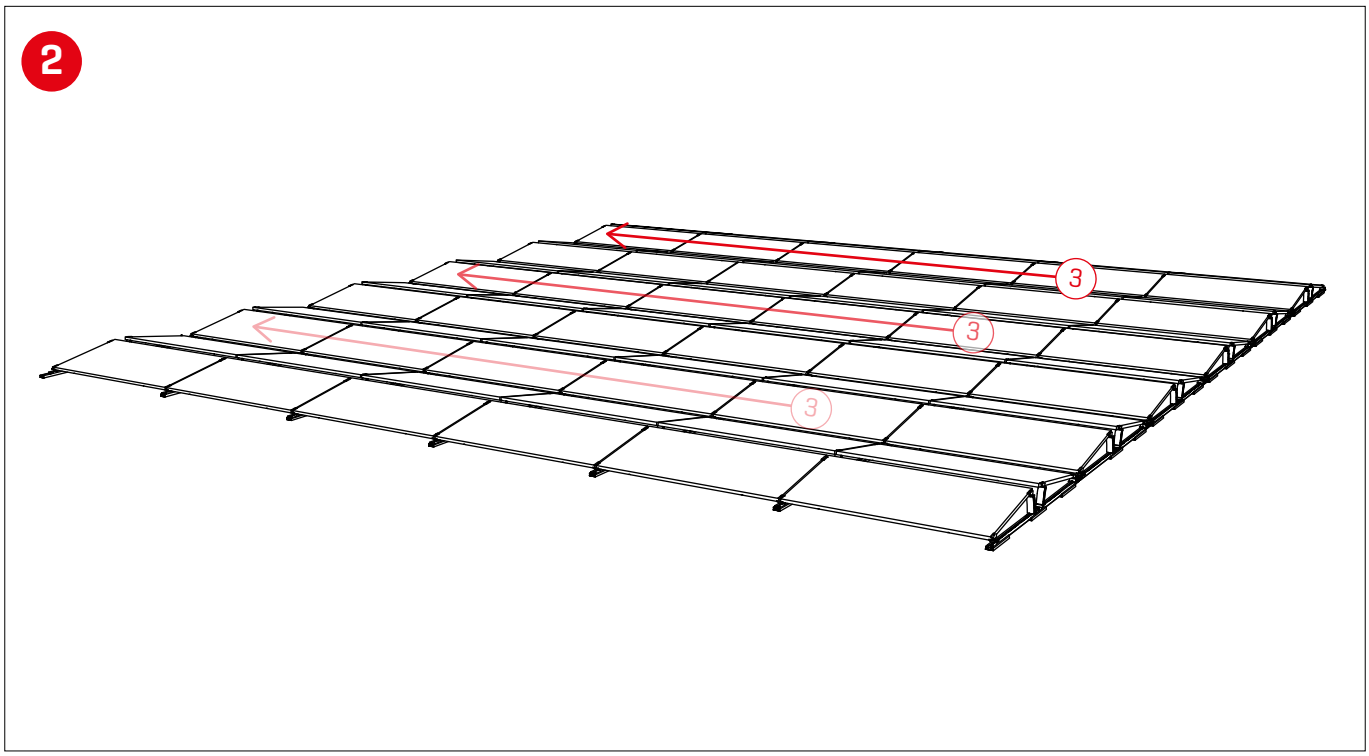

Optional assembly steps

Fixed connection with Dome FixPro using Solmont mounting base

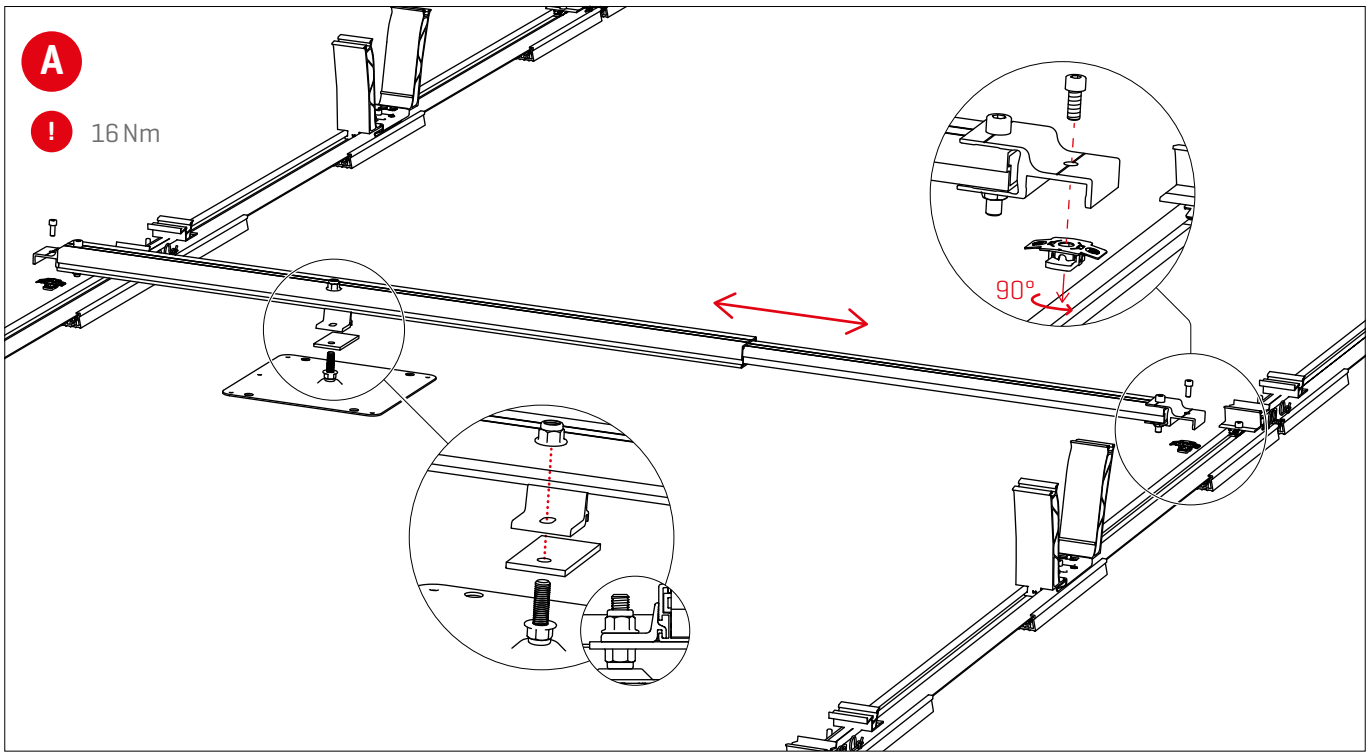

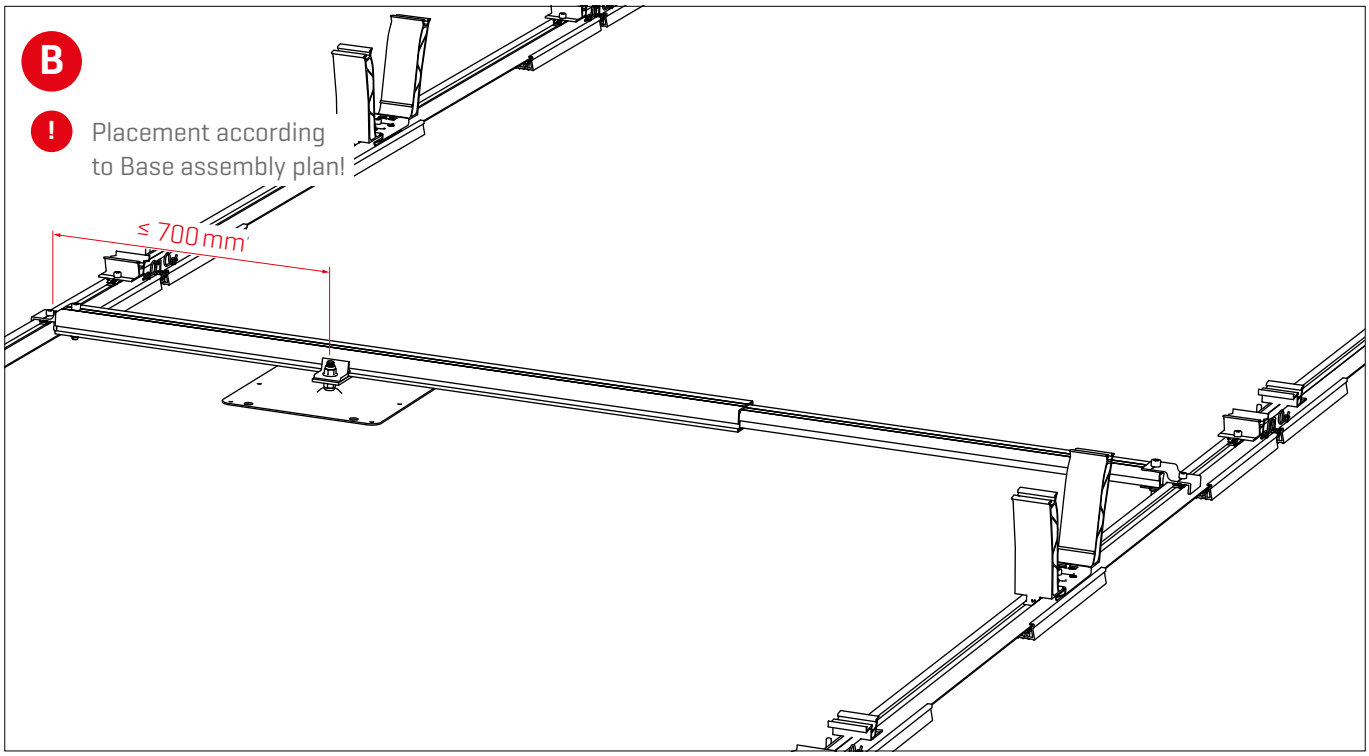

Cable-Manager

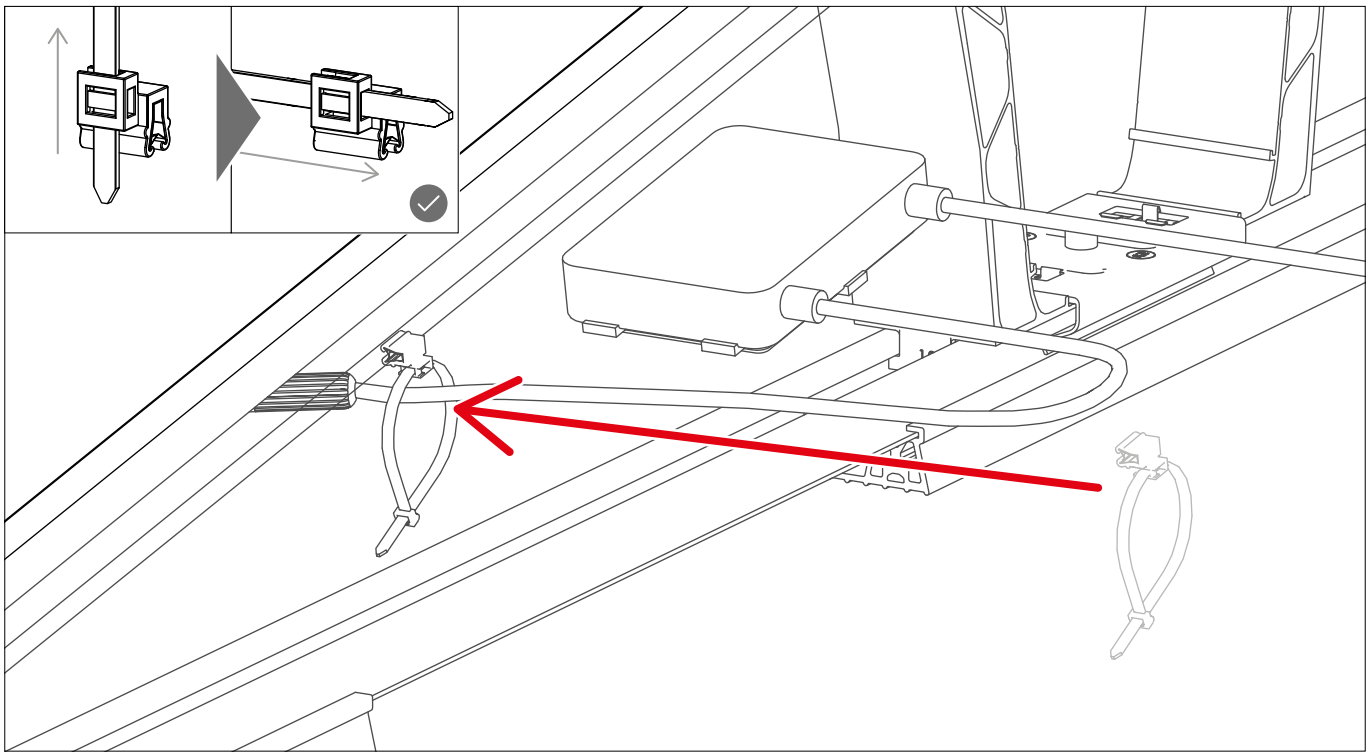

Module frame earthing with TerraGrif

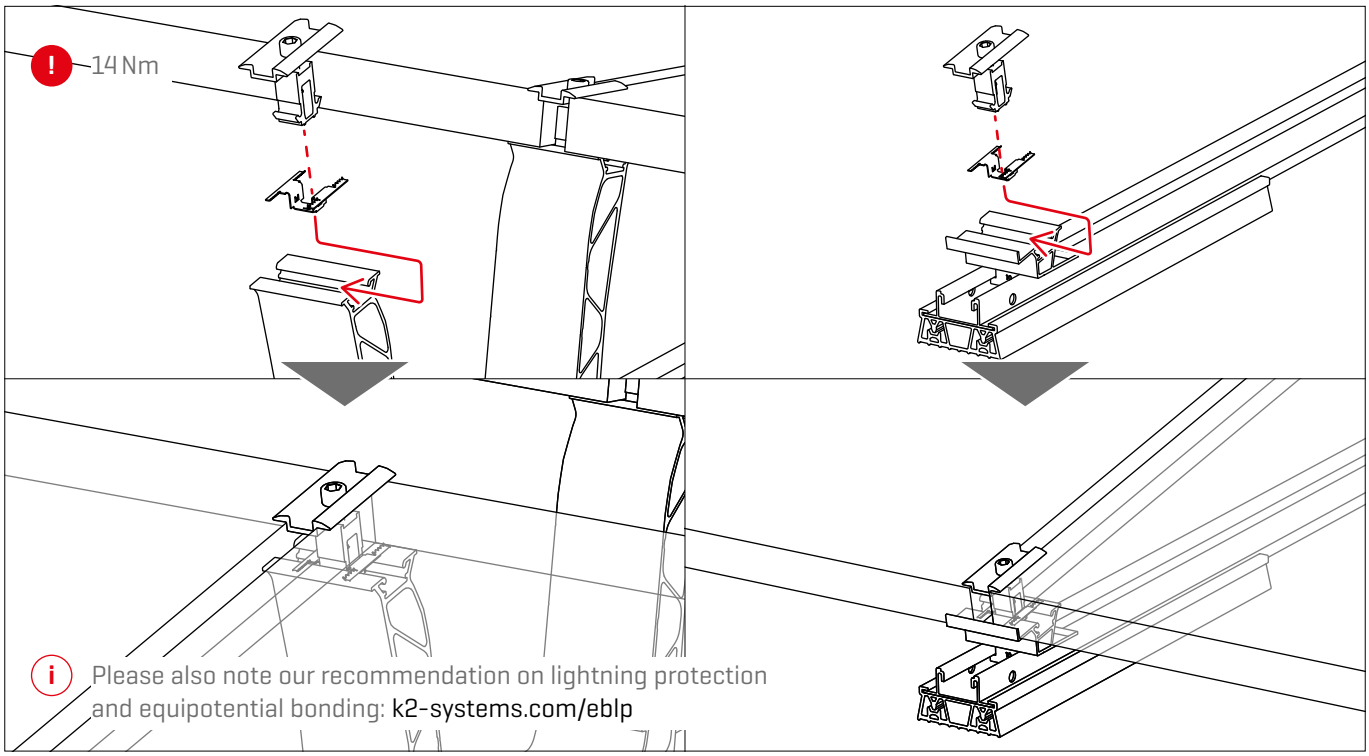

Please also note our recommendation on lightning protection and equipotential bonding: k2-systems.com/eblp

Cable management with PVX MultiMount

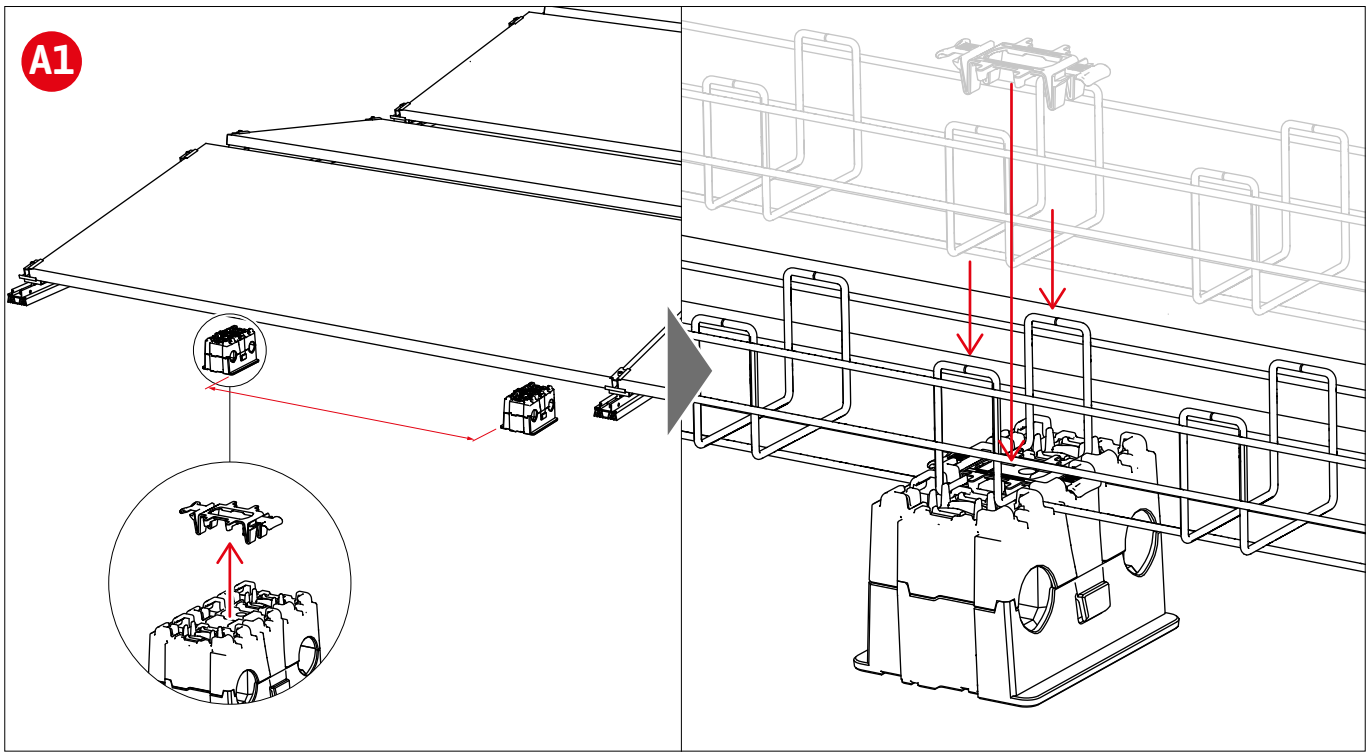

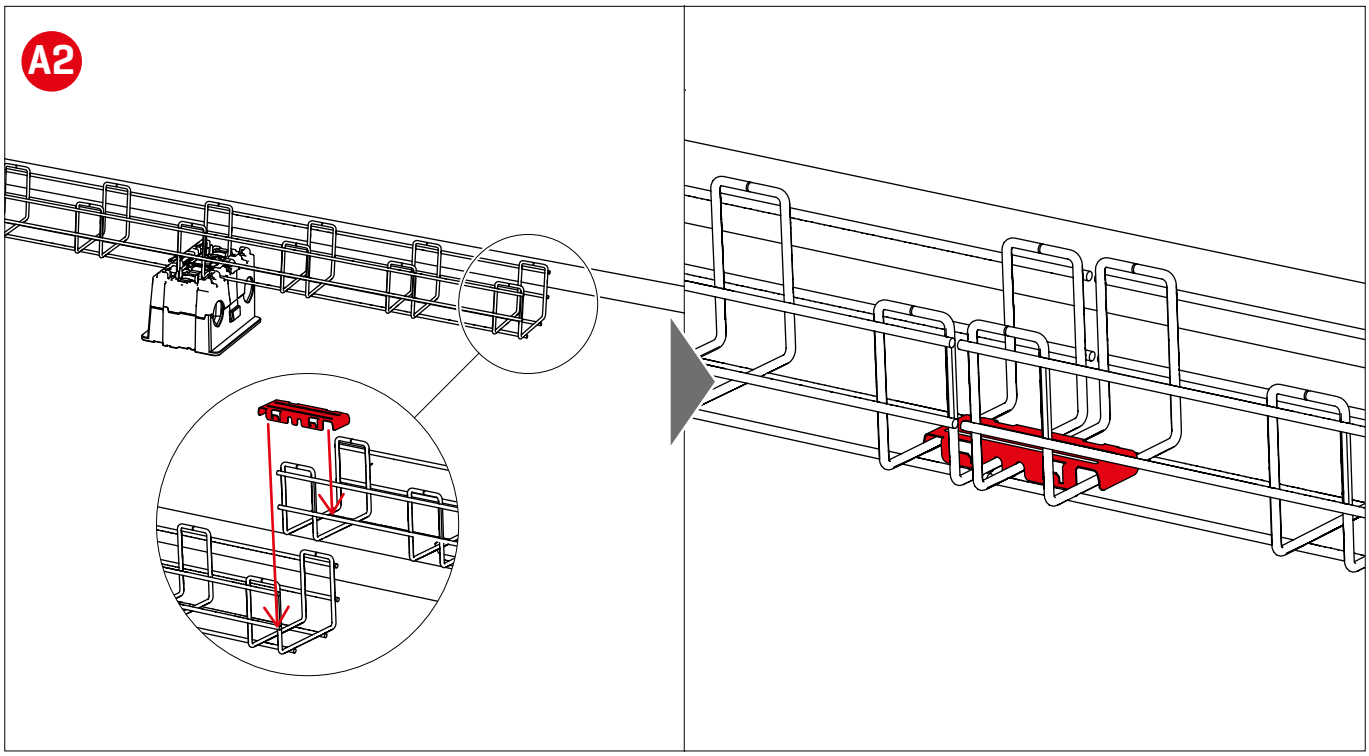

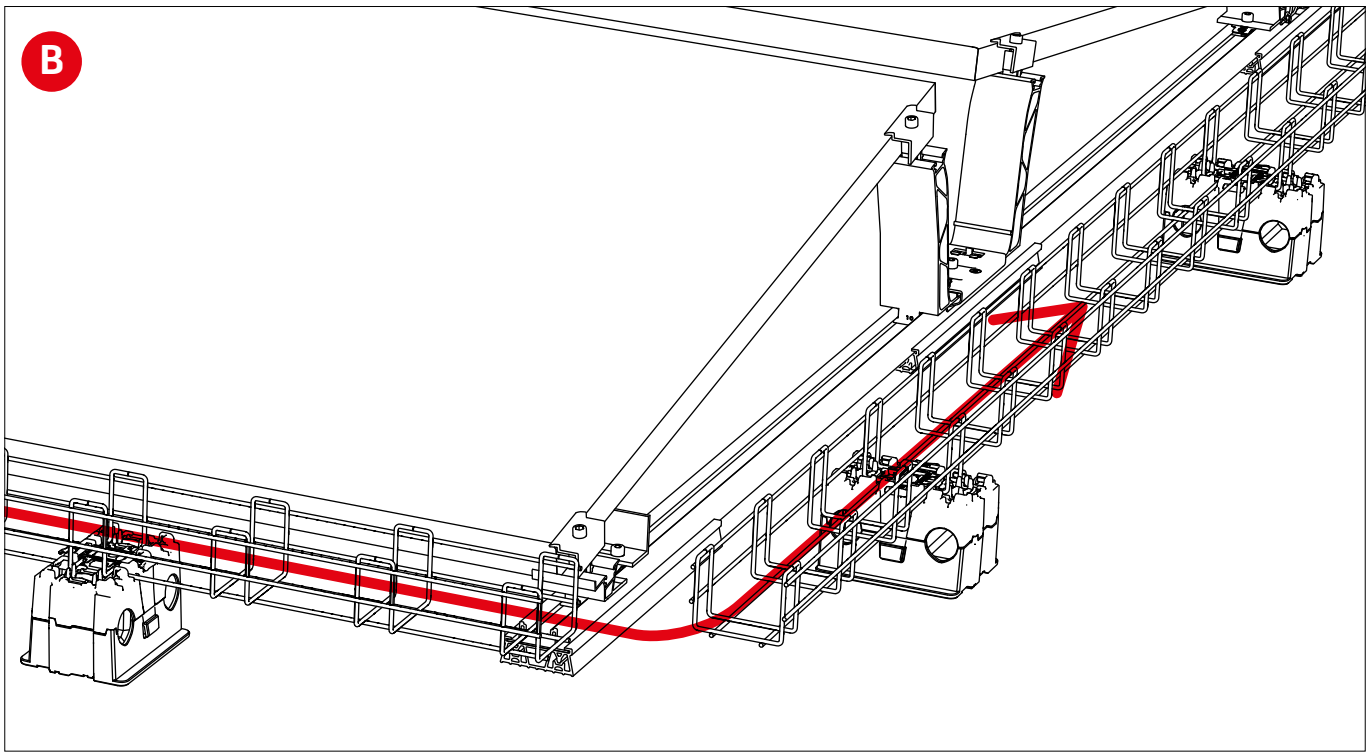
B

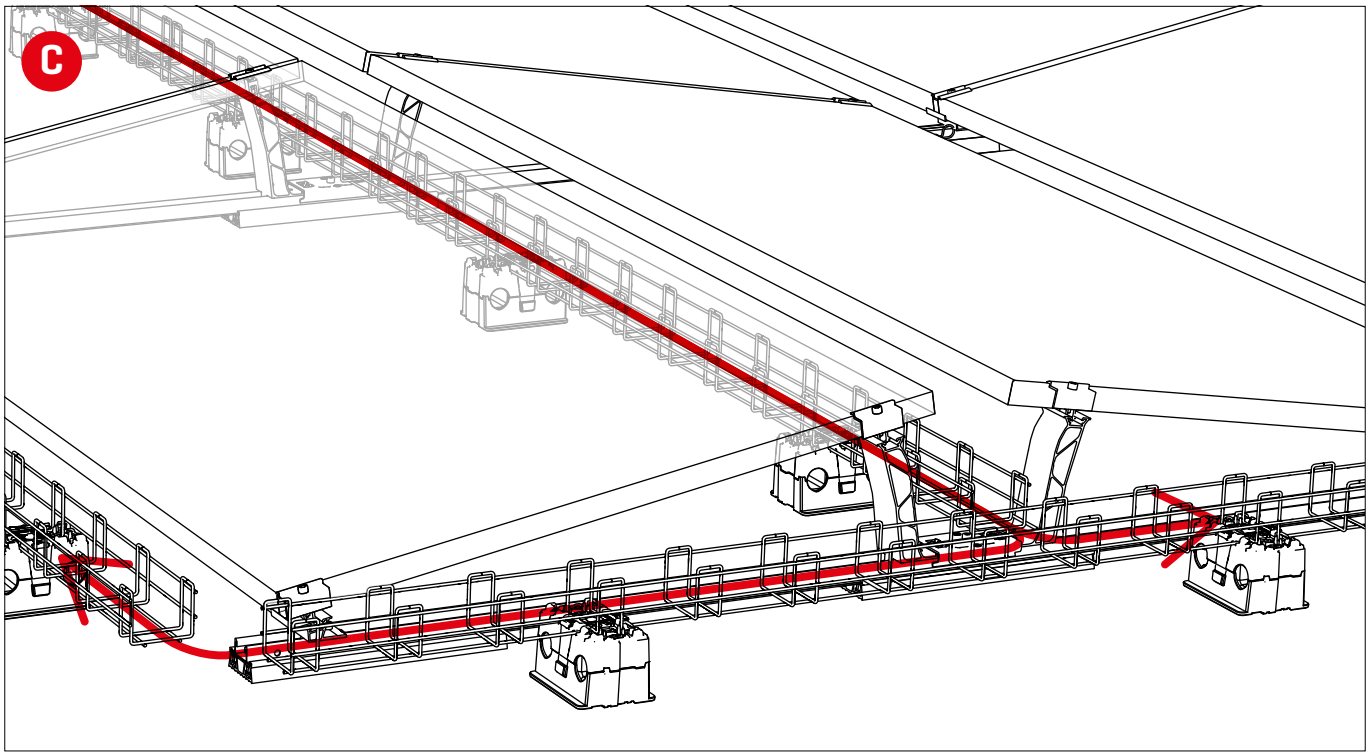
C

Notes

Notes

We support PV systems

Thank you for choosing a K2 mounting system.

Systems from K2 Systems are quick and easy to install. We hope these instructions have helped. Please contact us with any questions or suggestions for improvement.
Our contact data:

- **k2-systems.com/en/contact**
- **Service Hotline: +49 (0)7159 42059-0**

Our General Terms of Business apply. Please refer:
k2-systems.com

K2 Systems GmbH

Haldenstraße 1
71272 Renningen
Germany

+49 (0) 7159 - 42059 - 0
info@k2-systems.com
www.k2-systems.com