IQ Gateway

The IQ Gateway is the platform for energy management and integrates with the IQ Microinverters and the IQ Batteries to provide complete control and insights into the Enphase Energy System. The IQ Gateway delivers solar production and energy consumption data to the Enphase monitoring and analysis software for comprehensive, remote maintenance and management of the Enphase Energy System.

Key specifications	ENV-S-WB-230	ENV-S-EM-230
Nominal grid voltage	230 V (L-N)	230 V (L-N), 230/400 V (L-N/L-L) Wye
Nominal frequency	50 Hz	
Maximum power consumption	5 W	
Dimensions (H × W × D)	126 mm × 213 mm × 45 mm	
Ambient air temperature range	-40 to 65°C (if installed outdoors), -40 to 46°C (if installed in an enclosure)	
Environmental rating	IP30. If installed outdoors, use an outdoor-rated enclosure.	
Maximum altitude	2500 m	

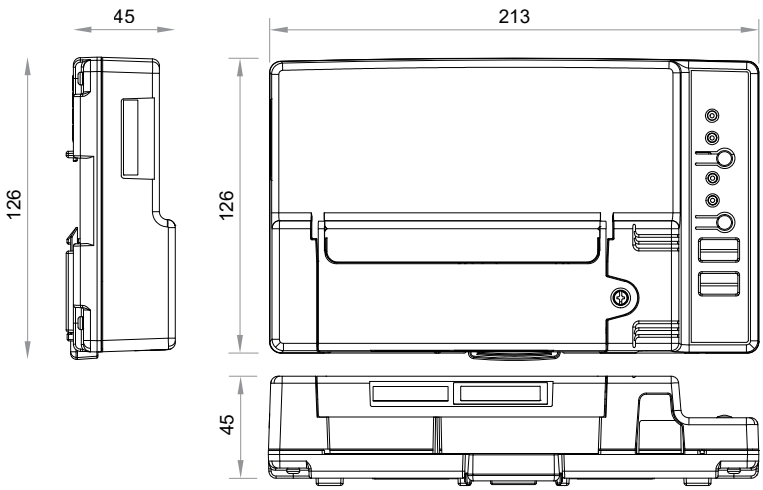

All dimensions in mm

Smart

- Enables web-based monitoring and control
- Bidirectional communication with IQ Microinverters, IQ Battery, and the Enphase Cloud for remote upgrade

Simple

- Easy system configuration using the Enphase Installer App
- Flexible networking with Wi-Fi, Ethernet, or cellular data
- DIN rail mounted

Reliable

- Designed for installation indoors or in an outdoor enclosure
- Five-year warranty

© 2025 Enphase Energy. All rights reserved. Enphase, the e and CC logos, IQ, and certain other marks listed at https://enphase.com/trademark-usage-guidelines are trademarks of Enphase Energy, Inc. in the U.S. and other countries. Data subject to change.

Product details	Units	ENV-S-WB-230	ENV-S-EM-230
Name	—	IQ Gateway Standard	IQ Gateway Metered
Description	—	Communications gateway with basic PV production monitoring (±5%) via PLC	Communications gateway with integrated PV and consumption metering. Includes two CTs (100 A primary circuit current).
Power measurement accuracy	—	Not supported	Production and consumption meter: ±1% accuracy

Power requirements	Units	ENV-S-WB-230	ENV-S-EM-230
Nominal grid voltage	V	230 (L-N)	230 (L-N), 230/400 (L-N/L-L) Wye
Minimum/Maximum grid voltage	V	184/276	
Nominal frequency	Hz	50	
Minimum/Maximum frequency	Hz	45/55	
Maximum overcurrent protection	A	20 (characteristic B)	
Maximum power consumption	W	5	
Average continuous power consumption	W	3	3 or 4 (with Communications Kit)

Capacity	Units	ENV-S-WB-230	ENV-S-EM-230
Maximum number of microinverters polled	—	Up to 300[1]	
Maximum number of IQ Batteries	—	Not supported	12 IQ Battery 3T or 4 IQ Battery 10T units 4 IQ Battery 5P units per phase

Mechanical data	Units	ENV-S-WB-230	ENV-S-EM-230
Dimensions (H × W × D)	mm	126 × 213 × 45	
Mounting	—	DIN rail	
DIN rail units width	modules	12	
Weight	kg	0.5	
Ambient air temperature range	°C	-40 to 65 (if installed outdoors), -40 to 46 (if installed in an enclosure)	
Relative humidity	%	85	
Overvoltage class AC port	—	III	
Overvoltage class relay port	—	II	
Environmental rating	—	IP30. If installed outdoors, use an outdoor-rated enclosure.	
Maximum altitude	m	2500	
USB ports	—	Two USB 2.0 ports, auto-sensing, auto-negotiation	
AC terminal block	—	N, L1 up to 6 mm^2	N, L1, L2, L3 up to 6 mm^2
CT terminal block	—	Not supported	Six double terminals, up to 1.5 mm^2
Digital I/O terminal block	—	Not supported	Five terminals, up to 1.5 mm^2

[1] Depends on geographic location and site configuration.

Communication interfaces	Units	ENV-S-WB-230	ENV-S-EM-230
Integrated Wi-Fi	—	802.11b/g/n (2.4 GHz, 5 GHz), for connecting to the Enphase Cloud via the internet	
Wi-Fi range (recommended)	m	10	
Ethernet	—	Optional, 802.3, Cat5E (or Cat 6) UTP Ethernet cable (not included), for connecting to the Enphase Cloud via the internet	
Mobile Connect	—	Optional, CELLMODEM-M1-06-AT-05[2] (not included)	
Digital I/O	—	Not supported	Digital input/output for grid operator control[3]
USB 2.0	—	For Mobile Connect	For Mobile Connect and Communications Kit
Access point (AP) mode	—	For a connection between the IQ Gateway and a mobile device running the Enphase Installer App	
Metering ports	—	Not supported	Up to three Consumption CTs, up to three Production CTs
Power line communication	—	Power line communication (PLC) 110 kHz–120 kHz (Class B), narrowband 200 Hz, to microinverters, IQ Relay, and ACB 1.5	
Web API	—	Refer to https://developer-v4.enphase.com	
Local API	—	Refer to the Guide for local API	
LED indicators	—	From top to bottom: Cloud connectivity, Wi-Fi access point mode, PV production state, PLC communications state	
Configured via	—	The Enphase Installer App and the Enphase Installer Platform	

Standards	Units	ENV-S-WB-230	ENV-S-EM-230
Grid compliance	—	EN50549-1, VDE-AR-N 4105, G100	
Safety	—	EN 61010-1, EN 62311	EN 61010-1, EN 61010-2-030, EN 62311
EMC	—	EN 61000-6-2, EN 61000-6-3, EN IEC 61000-3-2, EN 61000-3-3, EN 50065-1, EN 50065-2-2	
RED standard	—	EN 300 328, EN 301 489-1, EN 301 893	
Product labelling	—	CE, UKCA & RCM	
Cybersecurity	—	UK Product Security and Telecommunications Infrastructure Regulations 2023	

Scope of delivery	Units	ENV-S-WB-230	ENV-S-EM-230
Package dimensions (H × W × D)	mm	160 × 276 × 98	
Package weight	kg	1	
Aluminium DIN rail	mm	125	
Current transformers (CTs)	—	Not supported	Two CT-100-SPLIT-ROW included

Manufacturer:

Enphase Energy Inc., 47281 Bayside Pkwy., Fremont, CA, 94538, United States of America, PH: +1 (707) 763-4784

Importer:

Enphase Energy NL B.V., Het Zuiderkruis 65, 5215MV, 's-Hertogenbosch, The Netherlands, PH: +31 73 3035859

[2] Available in select countries.
[3] Function is activated in Germany, Austria, and Switzerland.

IQ Gateway accessories (order separately)

CELLMODEM-M1-06-AT-05

Mobile Connect

The Enphase Mobile Connect cellular modem delivers easy and reliable networking for Enphase Energy Systems—with multiple carrier options.

CT-100-SPLIT-ROW

Pack of four 100 A-rated split-core (CT), with accuracy ±1%. For use with IQ Gateway Metered in multi-phase applications, designed for smaller main panels with conductors up to 16 mm^2.

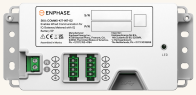

COMMS-KIT-INT-02

Communications Kit 2 INT

The Enphase Communications Kit 2 INT enables wired communication between IQ Gateway Metered and IQ Battery 5P using control cables.

Components of the Enphase Energy System

IQ Microinverters

IQ Microinverters pack more power into less space than other rooftop solar systems and make rooftop solar more productive, reliable, smart, and safe.

IQ Relay 1P and IQ Relay 3P

Production and storage, circuit integrated, network and system protection device with PLC-phase coupler (multi-phase) and DC current injection monitoring.[4]

IQ Battery 5P with FlexPhase

IQ Battery 5P's all-in-one AC-coupled storage system is powerful, reliable, simple, and safe. It has a total usable energy capacity of 5.0 kWh and includes embedded IQ8T-BAT Microinverters for reliable operation.

IQ Battery 5P

IQ Battery 5P all-in-one AC-coupled system is powerful, reliable, simple, and safe. It has a total usable energy capacity of 5.0 kWh and includes six embedded IQ8D-BAT Microinverters.

[4] IQ Relay is not required in all countries; check local grid connection requirements to confirm.

Revision history

Revision	Date	Description
DSH-00011-6.0	October 2025	Added IQ Battery 5P with FlexPhase details.
DSH-00011-5.0	July 2025	Internal updates.
DSH-00011-4.0	August 2024	Added IQ Battery 5P and Communication Kit 2 INT details.
DSH-00011-3.0	April 2024	Added the cybersecurity standards.
DSH-00011-2.0	February 2024	Updated the “Compliance” section and the CELLMODEM-M1-06-AT-05 details.
DSH-00011-1.0	May 2023	Initial release of consolidated IQ Gateway data sheet (IQ Gateway Standard and IQ Gateway Metered).
Previous releases.		