Quick Installation Guide

—— Triple Power Lithium-ion Battery

II Installation Prerequisites

Make sure that the installation location meets the following conditions:

- The building is designed to withstand earthquakes
- The location is far away from the sea, to avoid sea water and humid air
- The floor is flat and level
- There are no flammable or explosive materials nearby
- THE AMBIENCE IS SHADY AND COOL, KEEP AWAY FROM HEAT AND AVOID DIRECT SUNLIGHT.
- The ambient enironment is shady and away from heat as well as direct sunlight.
- The temperature and humidity stay at a constant level.
- There is minimal dust and dirt in the area.
- There is no corrosive gases present, including ammonia and acid vapor.
- The ambient temperature is within the range from 0°C to 55°C and the optimal ambient temperature is between 15°C and 35°C.

NOTE!

The Triple Power battery is rated at IP55 and thus can be installed outdoors as well as indoors. However, if installed outdoors, do not expose the battery to directly sunlight and moisture.

NOTE!

If the ambient temperature is beyond the operating range, the battery pack will stop operating to protect itself. The optimal temperature range for the battery pack to operate is form 15℃ to 35℃. Frequent exposure to harsh temperatures may deteriorate the performance and lifetime of the battery module.

NOTE!

For the first installation, the interval among manufacture dates of battery modules shall not exceed 3 months.

IV Overview of Installation

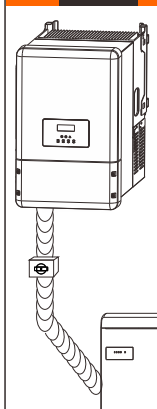

NOTE!

-One T-BAT system is allowed to install one T-BAT H 5.8 with another three battery packs at most. Connecting more than four batteries in total to the T-BAT system will blow the fuse, and the batteries will be damaged. Please keep in mind and follow this instruction.
-If the batteries have not been used for more than 9 months, these batteries must be charged to at least SOC 50 % each time.
-If one of the batteries is replaced, the SOC of the battery after replacement shall be consistent with those of batteries that have not been replaced, with the maximum difference of between -5% and 5%.
-If users want to increase their battery system capacity, please ensure that the SOC of the existing system capacity is about 40%. The manufacture date of the new battery shall not exceed 6 months; in case of exceeding 6 months, please charge the new battery to around 40%.

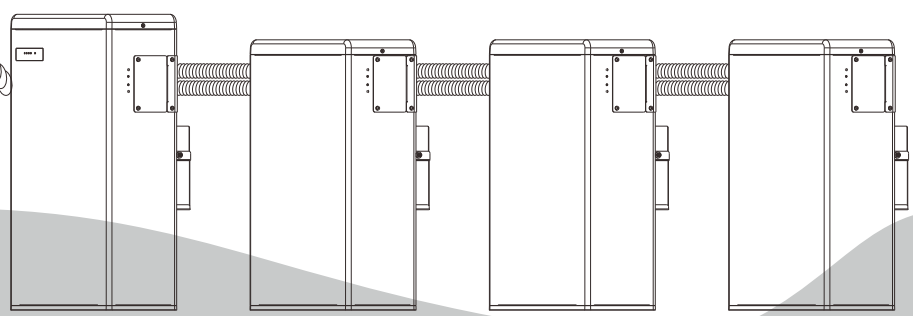

I Packing List (T-BAT H 5.8 and HV11550)

Note: The quick installation guide describes installation steps briefly. If you have any questions during the installation, please refer to the User Manual for more information.

T-BAT H 5.8

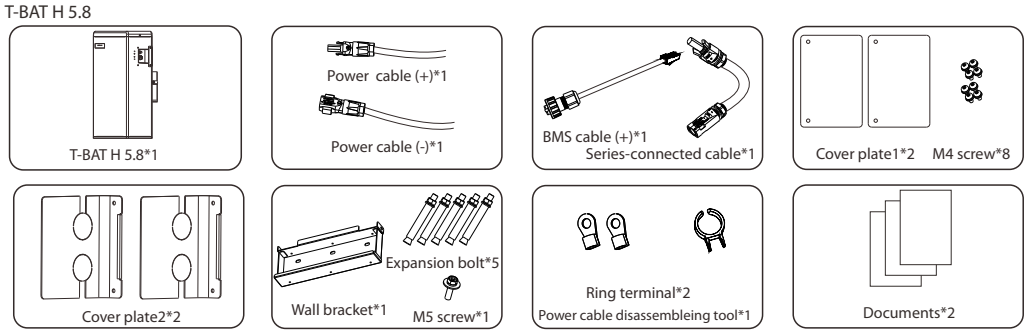

HV11550

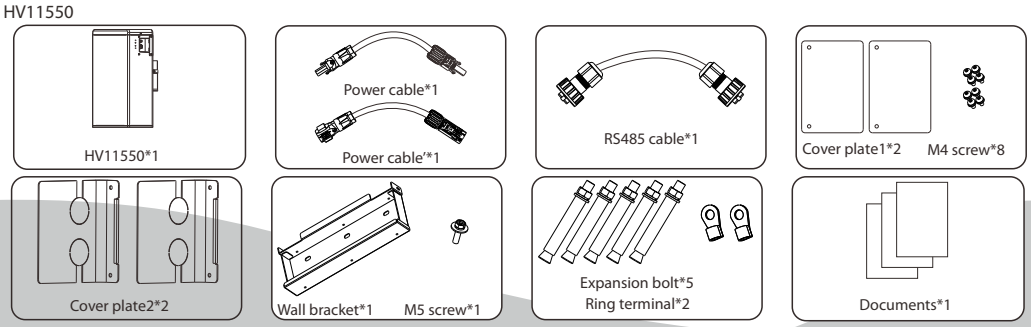

III Battery Installation

Note: 1. For T-BAT H 5.8 + 1~3 battery moduls, please finish the battery installation before connecting cables!
2. Please make sure that the inverter is completely switched off before you start connecting cables!

There are two installation ways, wall mounting and floor mounting.

I. Wall mounting

- Mark the position of the holes.

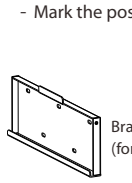

- Drill five holes with a Φ10 drill bit.
- Depth: at least 50mm.

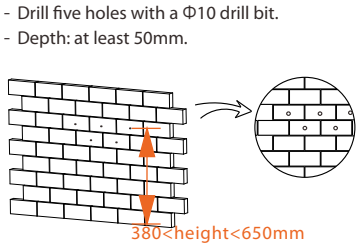

- Hammer the expension tubes into the holes.

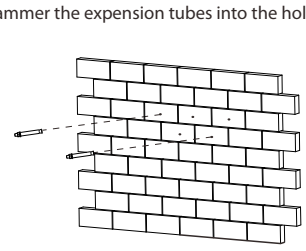

- Screw the expansion bolts.

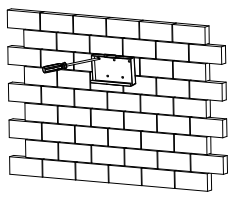

- Match the battery with the bracket.

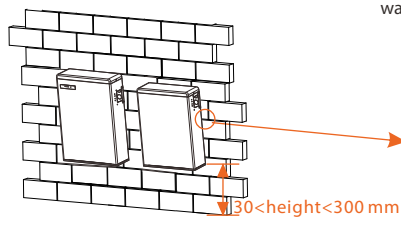

- Lock the joint between hanging board and wall bracket with M5 screw.

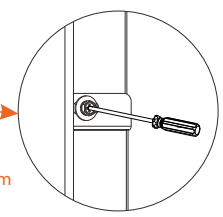

NOTE: 1. The distance between the bottom of the battery pack and floor shall not exceed 300mm.
2. It is recommended to keep a distance of at least 300mm between battery packs.

II. Floor mounting

- Mark the position of the holes.

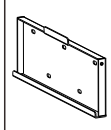

- Drill five holes with a Φ10 drill bit.
- Depth: at least 50mm.

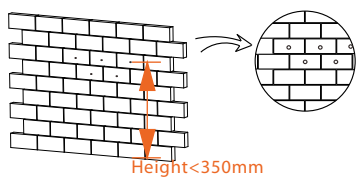

- Hammer the expension tubes into the holes.

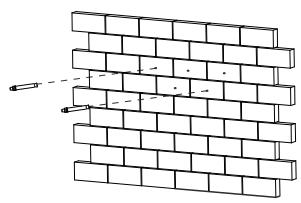

- Screw the expansion bolts.

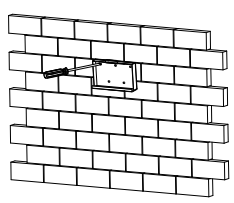

- Match the battery with the bracket.

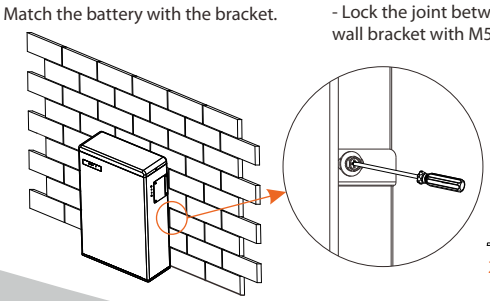

- Lock the joint between hanging board and wall bracket with M5 screw.

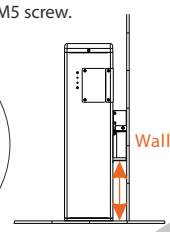

Note: To prevent the battery from becoming moist, it is recommended to place a foam cushion, or other cushion made up of other materials, with a height of 3 cm to 4 cm, under the battery.

V Overall Installation

1. Connect the cables.
2. Run the cables through the corrugated pipe.
3. DO REMEMBER TO INSERT THE SERIES-CONNECTED CABLE AT "-" AND "YPLUG" ON THE RIGHT SIDE OF LAST BATTERY MODULE TO COMPLETE THE INTERNAL CIRCUIT.
4. Set the cables into the groove of metal plates and screw them back to the battery module on both sides.

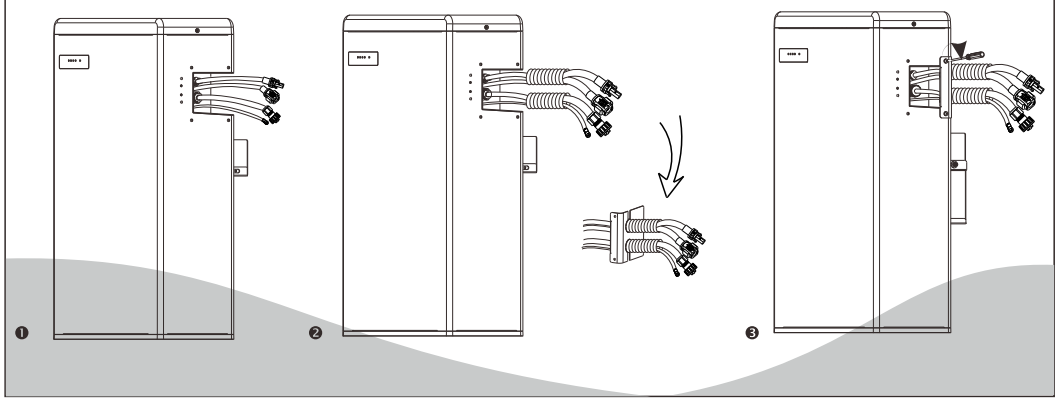

VI Power Cable Connection

For T-BAT H 5.8:

1. Insert the series-connected cable at "-" and "YPLUG" on the right side of T-BAT H 5.8 to make a complete the internal circuit.

For T-BAT H 5.8 + 1~3 battery packs:

1. Connect "-" on the right side of T-BAT H 5.8/HV11550 to "+" on the left side of the next battery packs.
2. Connect "YPLUG" on the right side of T-BAT H 5.8/HV11550 to "XPLUG" on the left side of the next battery packs.
3. The rest battery packs are connected in the same way.
4. Insert the series-connected cable at "-" and "YPLUG" on the right side of last battery packs to make a complete circuit.

> Note!
> Regardless of how many battery modules the user install, please put a waterproof cap on the unconnected communication port of the battery module.

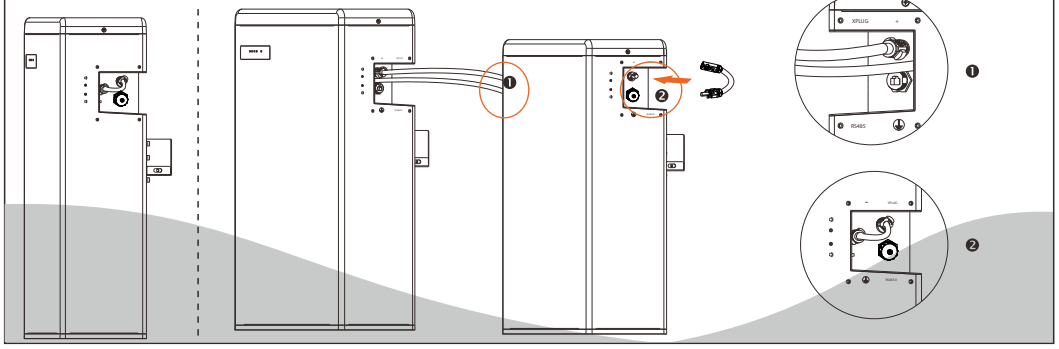

VII Power Cable Connection

1. Connect the the positive cable (+) and negative cable (-) to the BAT+ and BAT- respectively as shown in the following figure.
2. Keep the Inverter off. Connect the other end of charging cables (+,-) to the correct port on the Inverter.

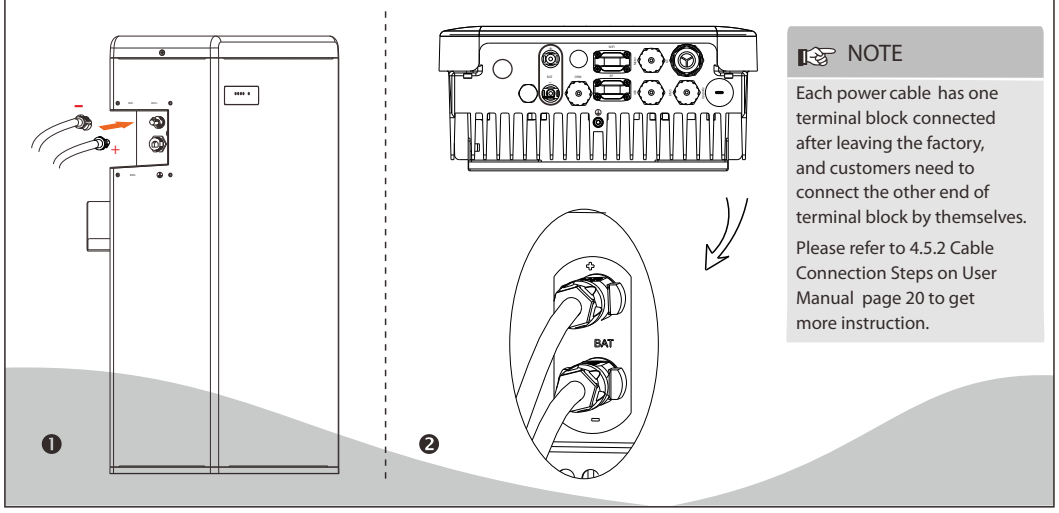

> NOTE
> Each power cable has one terminal block connected after leaving the factory, and customers need to connect the other end of terminal block by themselves.
> Please refer to 4.5.2 Cable Connection Steps on User Manual page 20 to get more instruction.

VIII Communication Cable Connection

For T-BAT H 5.8:

1. Insert one end of the BMS communication cable without cable nut directly to the BMS port of Inverter.
2. Insert the other end of the BMS communication cable to the BMS connector; then assemble cable gland and tighten cable cap.

For T-BAT H 5.8 + 1~3 battery packs:

1. Connect RS485 II of the first battery module (as show on the right) to RS485 I on the next battery module (as shown on the left).
2. Assemble cable gland and tighten cable cap.

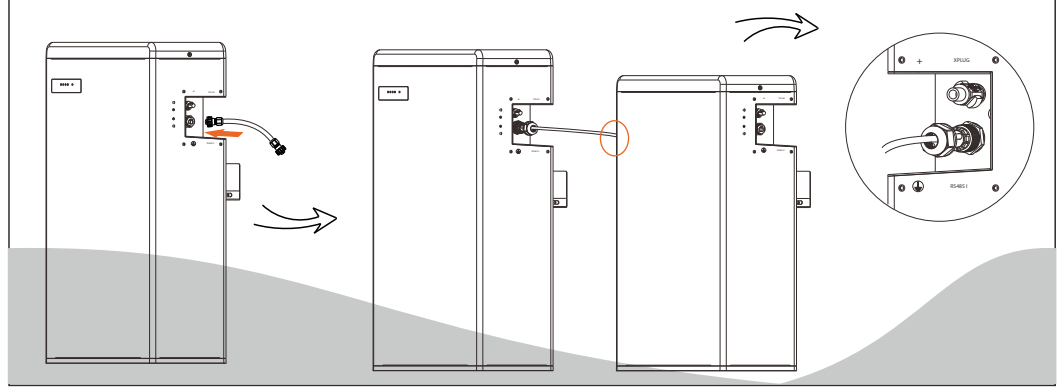

IX Ground Connection

The terminal point for GND connection is on the side of grooves as shown below:

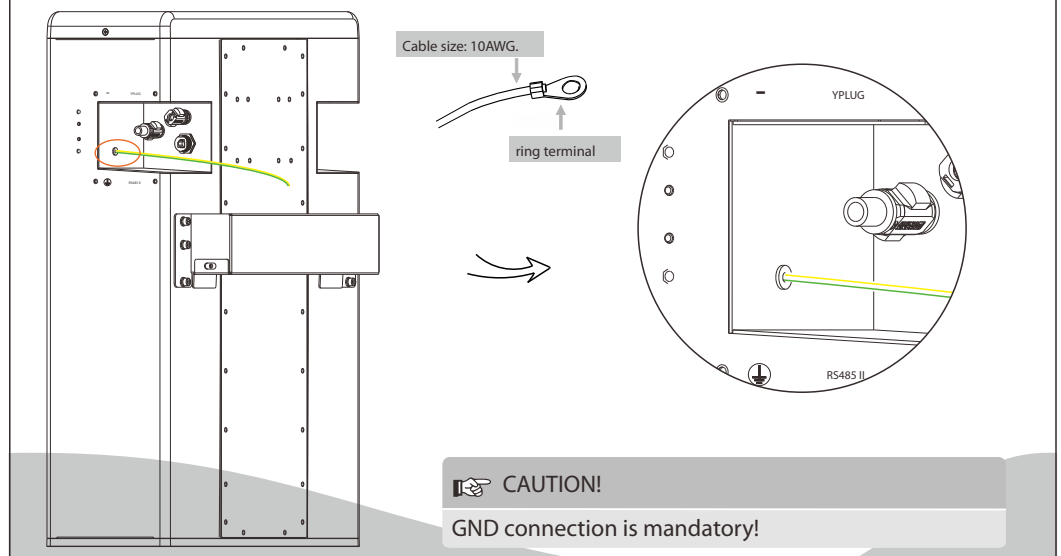

> CAUTION!
> GND connection is mandatory!

X Commissioning

If all the battery modules are installed, follow these steps to put it in operation.

1. Remove the upper cover board of T-BAT H 5.8;
2. Remove the small cover plate;
3. Rotate the DIP to corresponding number with small tool accroding to the number of battery pack(s) that has(have) been installed (please see the configuration on the right);
4. Switch the circuit breaker to ON ;
5. Press the POWER button to turn on the T-BAT system;
6. Put the small cover plate back;
7. Reinstall the upper cover board to T-BAT H 5.8;
8. Power on the Inverter.

DIP Configuration:

0- Matching T-BAT H 5.8 (default)
1- Matching T-BAT H 5.8 + 1*HV11550
2- Matching T-BAT H 5.8 + 2*HV11550
3- Matching T-BAT H 5.8 + 3*HV11550

