Power Optimizer

For Residential Installations

S440 / S500 / S500B / S650B



POWER OPTIMIZER

Enabling PV power optimization at the module level

- Specifically designed to work with SolarEdge residential inverters
- Detects abnormal PV connector behavior, preventing potential safety issues*
- Module-level voltage shutdown for installer and firefighter safety
- Superior efficiency (99.5%)
- Mitigates all types of module mismatch loss, from manufacturing tolerance to partial shading
- Faster installations with simplified cable management and easy assembly using a single bolt
- Flexible system design for maximum space utilization
- Compatible with bifacial PV modules

* Functionality subject to inverter model and firmware version

Power Optimizer

For Residential Installations

S440 / S500 / S500B / S650B

	S440	S500	S500B	S650B	UNIT
INPUT					
Rated Input DC Power[1]	440 / 490[2]	500 / 550[2]	500 / 650[2]	650	W
Absolute Maximum Input Voltage (Voc)	60		125	85[3]	Vdc
MPPT Operating Range	8 – 60		12.5 – 105	12.5 – 85	Vdc
Maximum Continuous Input Current	14.5 / 15[2]	15			Adc
Maximum Short-Circuit Current (Isc) of Connected PV Module for Residential SolarEdge Home Hub Inverters	16.5				Adc
Maximum Short-Circuit Current (Isc) of Connected PV Module for All Other SolarEdge Inverters	15				Adc
Maximum Efficiency	99.5				%
Weighted Efficiency	98.6				%
Overvoltage Category	II				
OUTPUT DURING OPERATION					
Maximum Output Current	15				Adc
Maximum Output Voltage	60		80		Vdc
OUTPUT DURING STANDBY (POWER OPTIMIZER DISCONNECTED FROM INVERTER OR INVERTER OFF)					
Safety Output Voltage per Power Optimizer	1 ± 0.1				Vdc
STANDARD COMPLIANCE[4]					
EMC	FCC Part 15 Class B; IEC 61000-6-2; IEC 61000-6-3; CISPR 11; EN 55011				
Safety	IEC 62109-1 (class II safety); UL 1741				
Material	UL 94 V-0, UV Resistant				
RoHS	Yes				
Fire Safety	VDE-AR-E 2100-712:2018-12				
INSTALLATION SPECIFICATIONS					
Maximum Allowed System Voltage	1000				Vdc
Dimensions (W x L x H)	129 x 155 x 30		129 x 165 x 45		mm
Weight	720		790		gr
Input Connector	MC4[5]				
Input Wire Length	0.1				m
Output Connector	MC4				
Output Wire Length	(+) 2.3, (-) 0.10				m
Operating Temperature Range[6]	-40 to +85				˚C
Protection Rating	IP68				
Relative Humidity	0 – 100				%

(1) Rated power of the module at STC will not exceed the Power Optimizer Rated Input DC Power. Modules with up to +5% power tolerance are allowed.
(2) For installations after April 1st, 2024.
(3) For S650B-**9**DM4MBM, available only in the Netherlands and the United Kingdom, the Absolute Maximum Input Voltage (Voc) is 125V.
(4) For details about CE compliance, see Declaration of Conformity – CE.
(5) For other connector types please contact SolarEdge.
(6) Power derating is applied for ambient temperatures above +85°C for S440 and S500, and for ambient temperatures above +75°C for S500B. Refer to the Power Optimizers Temperature Derating technical note for details.

© SolarEdge Technologies, Ltd. All rights reserved. SOLAREDGE, the SolarEdge logo, OPTIMIZED BY SOLAREDGE are trademarks or registered trademarks of SolarEdge Technologies, Inc.
All other trademarks mentioned herein are trademarks of their respective owners. Date: February 1, 2026 DS-000091-ENG. Subject to change without notice.

CE RoHS

/ Power Optimizer

For Residential Installations

S440 / S500 / S500B / S650B

PV System Design Using a SolarEdge Inverter[7]		SolarEdge Home Wave/Hub Inverter Single Phase	SolarEdge Home Short String Inverter Three Phase	Three Phase for 230/400V Grid	Three Phase for 277/480V Grid	
Minimum String Length (Power Optimizers)	S440, S500	8	9	16	18	
	S500B, S650B	6	8	14		
Maximum String Length (Power Optimizers)		25	20	50[8]		
Maximum Continuous Power per String		5700	5625	11,250	12,750	W
Maximum Allowed Connected Power per String[9] (In multiple string designs, the maximum is permitted only when the difference in connected power between strings is 2000 W or less)	Inverter's Rated AC Power ≤ Maximum Continuous Power per String	Per the inverter's maximum input DC power	Per the inverter's maximum input DC power	Per the inverter's maximum input DC power	Per the inverter's maximum input DC power	W
	Inverter's Rated AC Power > Maximum Continuous Power per String	6000[10] 6800 for inverters with Rated AC Power ≥ 8000 W that are connected to two or more strings		13,500	15,000	
Parallel Strings of Different Lengths or Orientations		Yes				

(7) It is not allowed to mix S-series and P-series Power Optimizers in new installations in the same string.
(8) For the SolarEdge Nexis Inverter 3ph, the Maximum String Length allowed is 33 Power Optimizers.
(9) Refer to the Single String Design Guidelines application note for further details.
(10) Valid only for installations performed after January 1st, 2025. For earlier installations, the Maximum Allowed Connected Power per String is 5700 W.

S440, S500, S500B[10] (Flat Bracket)	S500B[10], S650B (Bent Bracket)
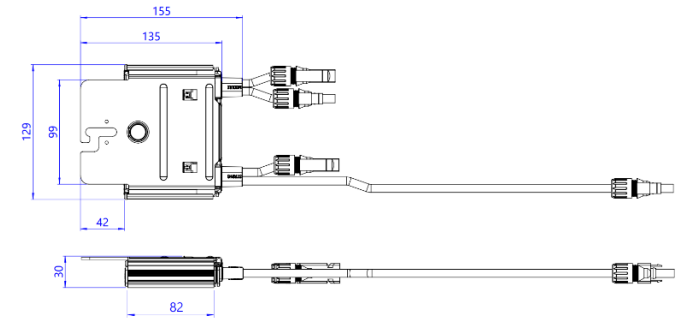	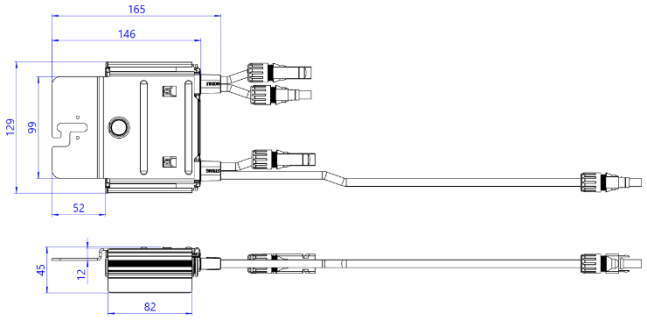

(11) S500B has either a flat bracket or a bent bracket. S500B-1GM4M**R**M has a flat bracket, and S500B-1GM4M**B**M has a bent bracket.

© SolarEdge Technologies, Ltd. All rights reserved. SOLAREDGE, the SolarEdge logo, OPTIMIZED BY SOLAREDGE are trademarks or registered trademarks of SolarEdge Technologies, Inc.
All other trademarks mentioned herein are trademarks of their respective owners. Date: February 1, 2026 DS-000091-ENG. Subject to change without notice.

CE RoHS

SolarEdge is a global leader in smart energy technology. By leveraging world-class engineering capabilities and with a relentless focus on innovation, SolarEdge creates smart energy solutions that power our lives and drive future progress.

SolarEdge developed an intelligent inverter solution that changed the way power is harvested and managed in photovoltaic (PV) systems. The SolarEdge DC optimized inverter maximizes power generation while lowering the cost of energy produced by the PV system.

Continuing to advance smart energy, SolarEdge addresses a broad range of energy market segments through its PV, storage, EV charging, UPS, and grid services solutions.



SolarEdge
@SolarEdgePV
@SolarEdgePV
SolarEdgePV
SolarEdge
www.solaredge.com/corporate/contact

solaredge.com

© SolarEdge Technologies, Ltd. All rights reserved. SOLAREDGE, the SolarEdge logo, OPTIMIZED BY SOLAREDGE are trademarks or registered trademarks of SolarEdge Technologies, Inc. All other trademarks mentioned herein are trademarks of their respective owners. Date: February 19, 2026 DS-000091-ENG Subject to change without notice.

Cautionary Note Regarding Market Data and Industry Forecasts: This brochure may contain market data and industry forecasts from certain third-party sources. This information is based on industry surveys and the preparer's expertise in the industry and there can be no assurance that any such market data is accurate or that any such industry forecasts will be achieved. Although we have not independently verified the accuracy of such market data and industry forecasts, we believe that the market data is reliable and that the industry forecasts are reasonable.

CE

solaredge