We support PV systems

Insertion System

ASSEMBLY INSTRUCTIONS

k2-systems.com

Content

- Tools overview 3
- General safety information 4
- The following guidelines apply 5
  - Planning with K2 Base 5
  - Roof requirements 5
  - Structural requirements 5
  - Important mounting instructions 5
- Components 6
  - Insertion system on pantiles 6
  - Insertion system on corrugated fibre cement 8
- Assembly 9
  - Portrait and Landscape 9
- Notes 15

Quality tested – severeal certifications

K2 Systems stands for secure connections, highest quality and precision. Our customers and business partners have known that for a long time. Independent institutes have tested, confirmed and **certified our capabilities and components.**

Please find our quality and product certificates under:
www.k2-systems.com/en/technical-information

Tools overview

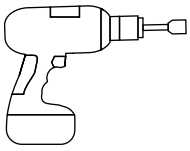

3/4/5 mm TX25/40 7/9/13 mm 7/8,5 mm 14/15 mm

6 - 35 Nm
(4,5 - 22,2 lb-ft)

3/4/5/6 mm 7/9/13 mm

15/19 mm

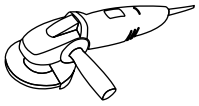

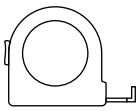

≥ 3,0 m

≥ 6,0 m

Digital Toolbox

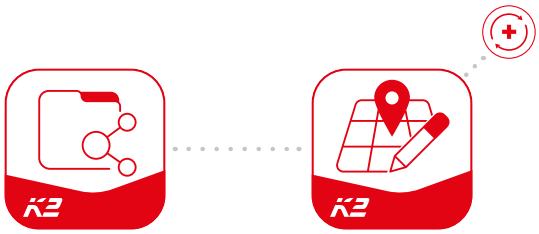

Do you already know our digital services? Use our K2 DocuApp now and record the first important data directly at the customer or project site. Simply transfer the data to our online planning software K2 Base. Here you can plan your project easily, safely and quickly. You receive a detailed project report with assembly plan and static report.
The K2+ interface enables seamless project data transfer to the planning tools of well-known inverter manufacturers or yield planning tools.

Get started and register now:

docuapp.k2-systems.com

base.k2-systems.com

General safety information

Please note that our general mounting instructions must be followed at all times and can be viewed online at www.k2-systems.com/en/technical-information.

- The equipment may only be installed and operated by qualified and adequately trained installers.
- Prior to installation, ensure that the product complies with on-site static loading requirements. For roof-mounted systems, the roof load-bearing capacity must always be checked.
- National and local building regulations and environmental requirements must be adhered to.
- Compliance with health and safety regulations, accident prevention guidelines and applicable standards is required.
  - Protective equipment such as safety helmet, boots and gloves must be worn.
  - Roofing works must be in accordance with roofing regulations utilising fall protection safeguards when eaves height exceeds 3 m.
  - At least two people must be present for the duration of the installation work in order to provide rapid assistance in the event of an emergency.
- K2 mounting systems are continuously developed and improved and the installation process may thereby change at any time. Prior to installation consult our website at www.k2-systems.com/en/technical-information for up-to-date instructions.
  We can send you the latest version on request.
- The assembly instructions of the module manufacturer must be adhered to.
- Equipotential bonding/grounding/earthing between individual parts is to be performed according to country specific standards, as well as national laws and regulations.
- At least one copy of the assembly instructions should be available on site throughout the duration of the installation.
- Failure to adhere to our general safety and assembly instructions and not using all system components, K2 is not liable for any resulting defects or damages. We do not accept liability for any damage resulting in the use of competitor's parts. Warranty is excluded in such cases.
- K2 Systems GmbH reserves the right to exclude liability in case of disregard of our General Safety Instructions as well as in case of installation or mounting of components of a competitor.
- If all safety instructions are adhered to and the system is correctly installed, there is a product warranty entitlement of 12 years! We strongly recommend reviewing our terms of guarantee, which can be viewed at www.k2-systems.com/en/technical-information
  We will also send this information on request.
- Dismantling of the system is performed in reverse order to the assembly.
- K2 stainless steel components are available in different corrosion resistance classes. Each structure or component must be carefully checked for possible corrosion exposure.

The following guidelines apply

The insertion system can be used without further testing by K2 systems in the following standard conditions. To calculate maximum distances between supports we recommend using our calculation tool K2Base. The system is also suitable for higher requirements. However, if a value exceeds the standard conditions, please contact K2 Systems.

Planning with K2 Base

We recommend our free online software K2 Base for the planning. In five steps, you can plan the right assembly system and get a construction recommendation, parts list and the structural analysis report. Simply register and start planning:
base.k2-systems.com

Roof requirements

- The sufficient holding force of the roof covering at the support or substructure must be ensured on site.
- Roof pitch: 5 - 75°
- If the roof pitch is less than 12 °, the module must be secured with a module earthing clip or by pulling in a wire rope upwards in the insertion profile.

Structural requirements

The static verification of the component is automatically calculated with the K2 Base On planning software for the respective location. The design provided in a project report must be followed.

Important mounting instructions

- On-site general standards and regulations for lightning protection must be observed and consultation with a specialist to create a lightning protection concept is recommended (use lightning protection clamp if necessary). Country-specific regulations must be observed.
- The minimum distance between two assembled horizontal rails must be at least 7 mm.
- Thermal separation of the module blocks:
  - Module support rails: max. 17.6 m (min. distance 3.0 cm)
  - Insertion rails / module level: max. 21.0 m
- To avoid tiles breaking under high snow loads, arrange for supporting the bracket with a suitable metal support plate.
- Do not step on roof hooks or rails, aren't climbing assists.
- Dimensioning and positioning of the woodscrews subject to the European Technical approvals (ETA) of the screw manufacturers.
- Special requirements apply with on-rafter insulation or counter battening: special fit-for-purpose spacer screws have to be used.

Components

Insertion system on pantiles

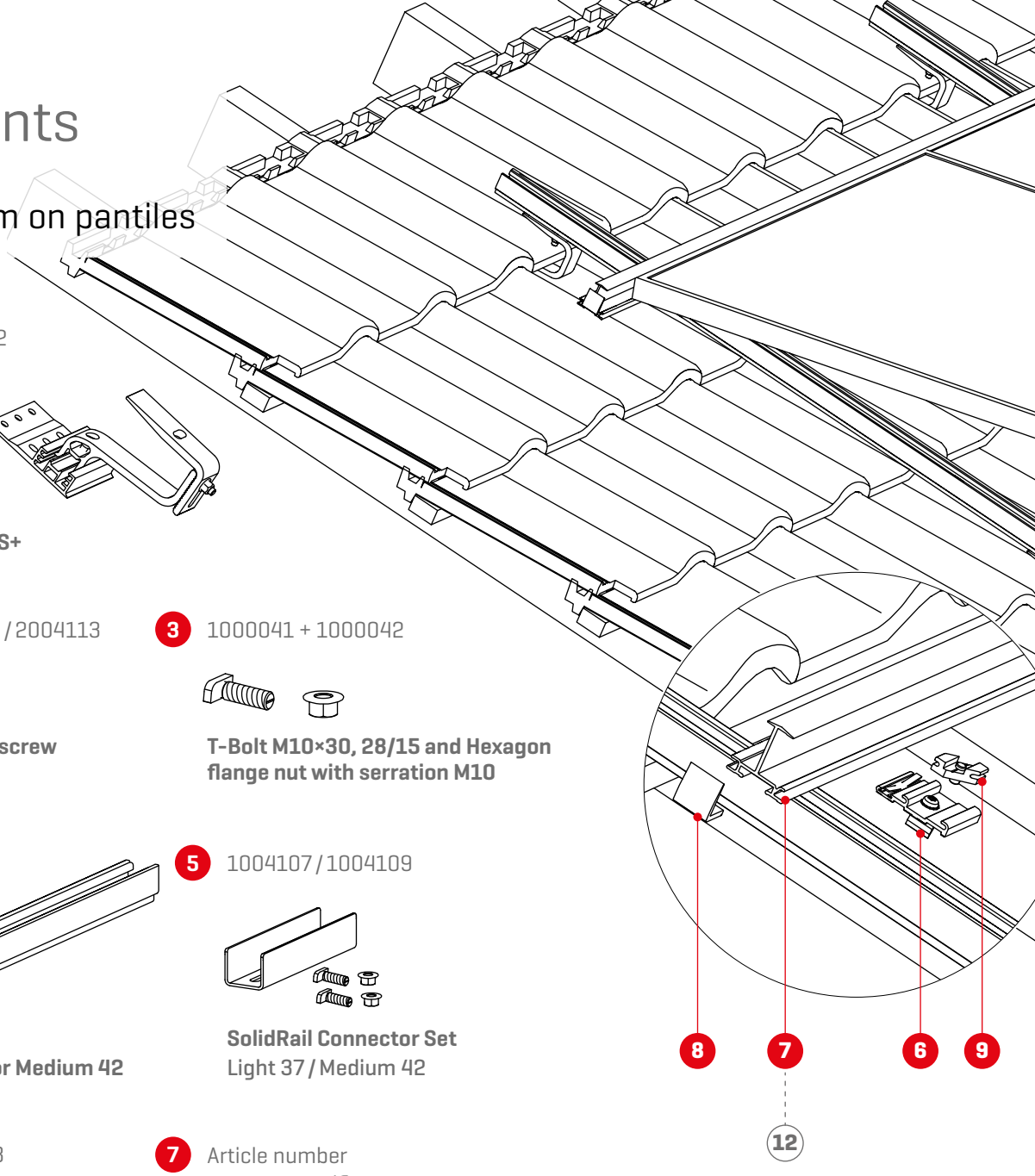

1 2002390 / 2002402

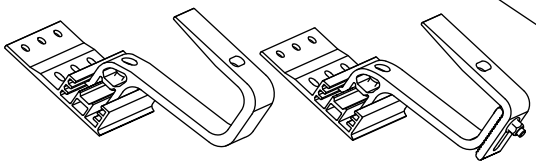

SingleHook 3S+ / 4S+

2 2004111 / 2004112 / 2004113

HECO-TOPIX wood screw
8×80/100/120 mm

3 1000041 + 1000042

T-Bolt M10×30, 28/15 and Hexagon flange nut with serration M10

4 Article number system-specific

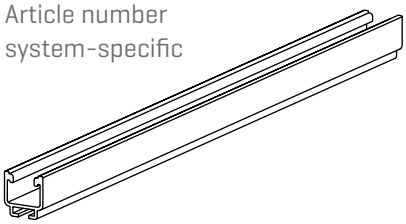

SolidRail Light 37 or Medium 42

5 1004107 / 1004109

SolidRail Connector Set
Light 37 / Medium 42

6 2002762 / 2002763

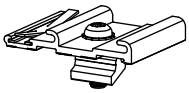

Cross Connector
aluminium mill finish / black anodised

7 Article number system-specific

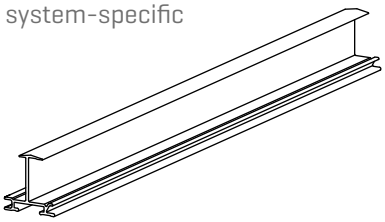

InsertionRail
30 / 35 / 40 mm frame height;
aluminium mill finish / black anodised

8 2002760 / 2002761

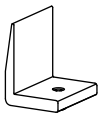

InsertionRail EndStop
aluminium mill finish / black anodised

9 2002766

InsertionRail FixStop

10 2002764

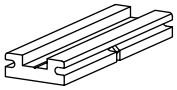

InsertionRail Connector

1 2 3 4 5 10

Optional components

11 2002767

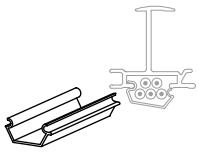

InsertionRail CableClip

12

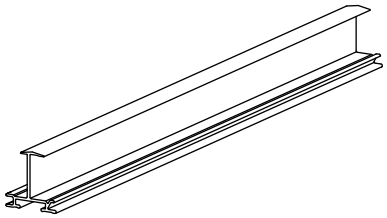

InsertionRail :
More heights on request!

13 2002397

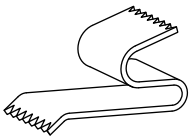

TerraGrif S

Components

Insertion system on corrugated fibre cement

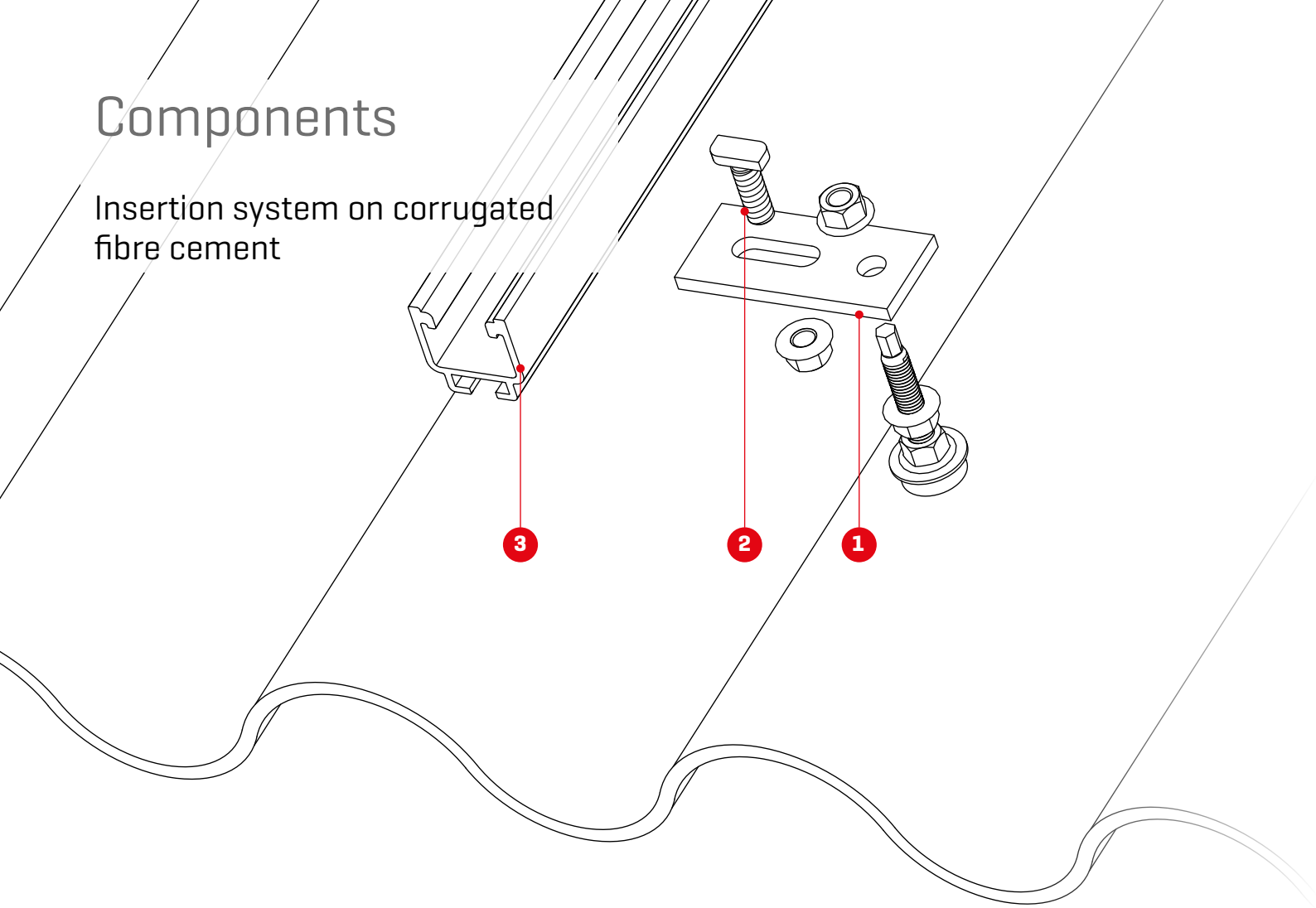

1 Article number system-specific !

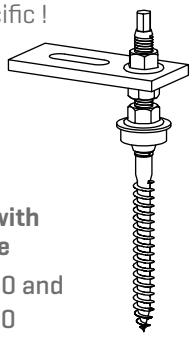

Hangerbolt with Adapter plate

M10×200/250 and M12×200/250

2 1000041 + 1000042

T-Bolt M10×30, 28/15 and Hexagon flange nut with serration M10

3 Article number system-specific !

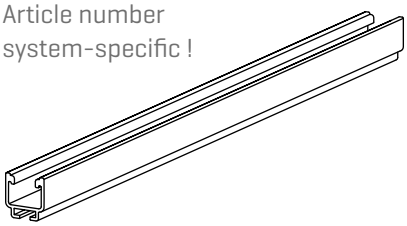

SolidRail Light or Medium

All other components mounted above the SolidRail mounting rail are the same as on page 6.

Assembly

Portrait and Landscape

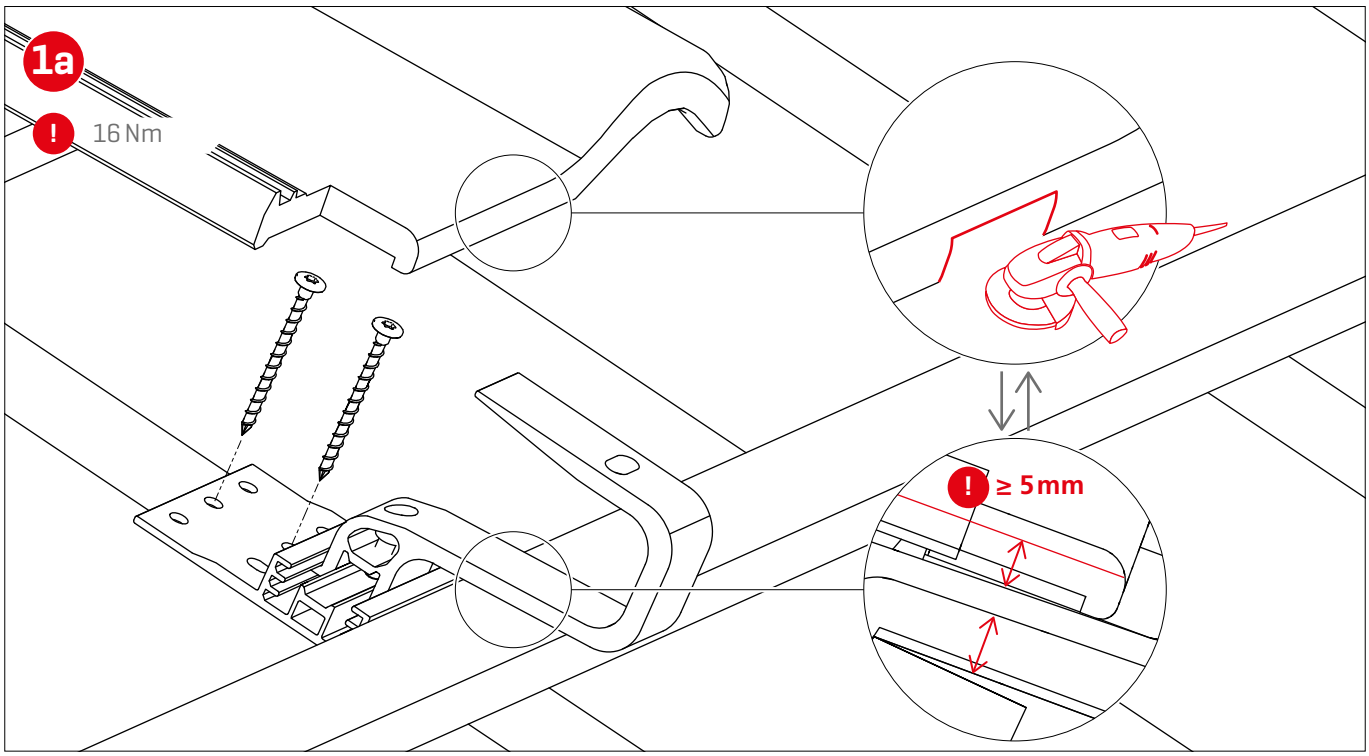

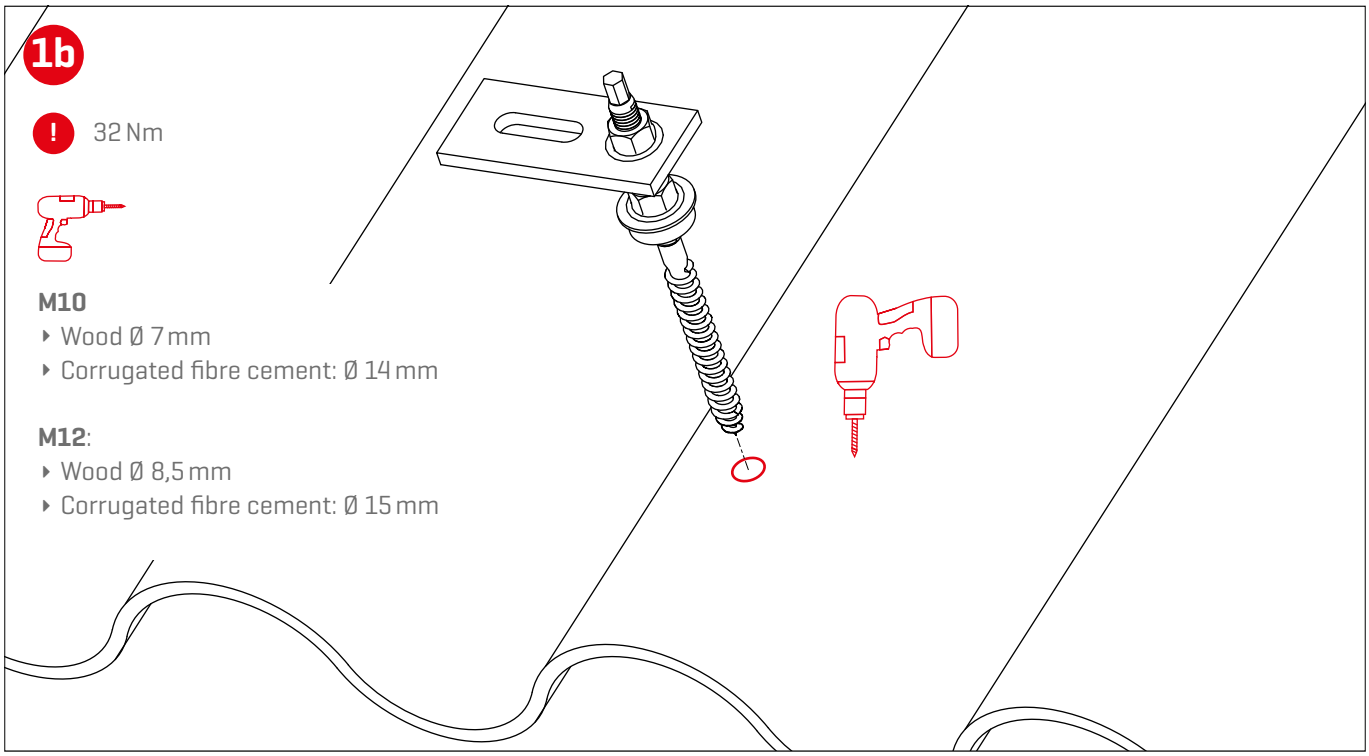

Important dimensions for module arrays or blocks and thermal separations

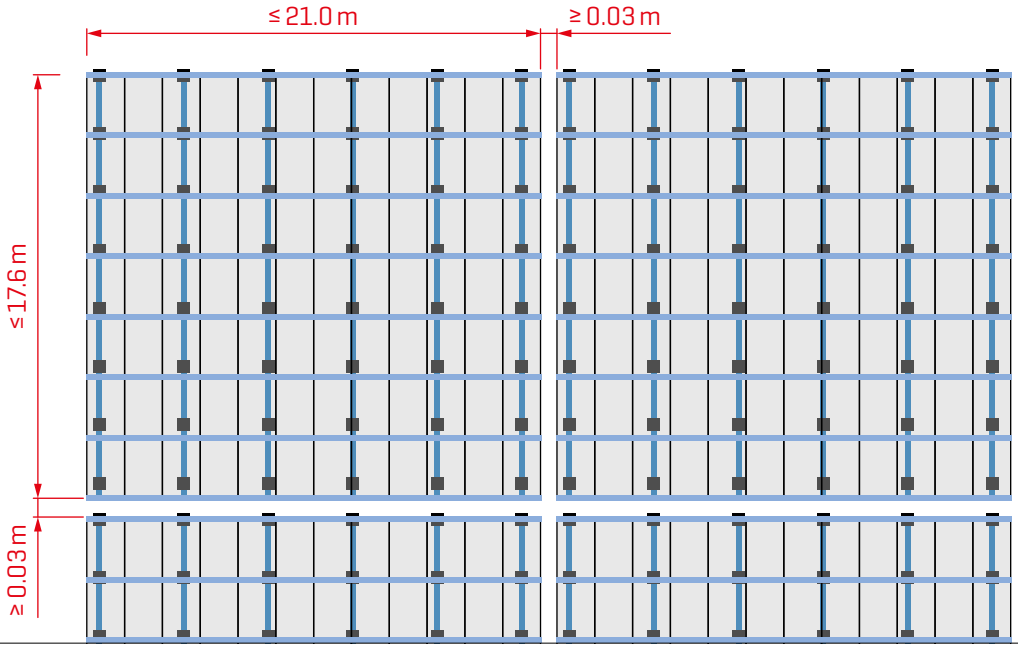

2

35 Nm

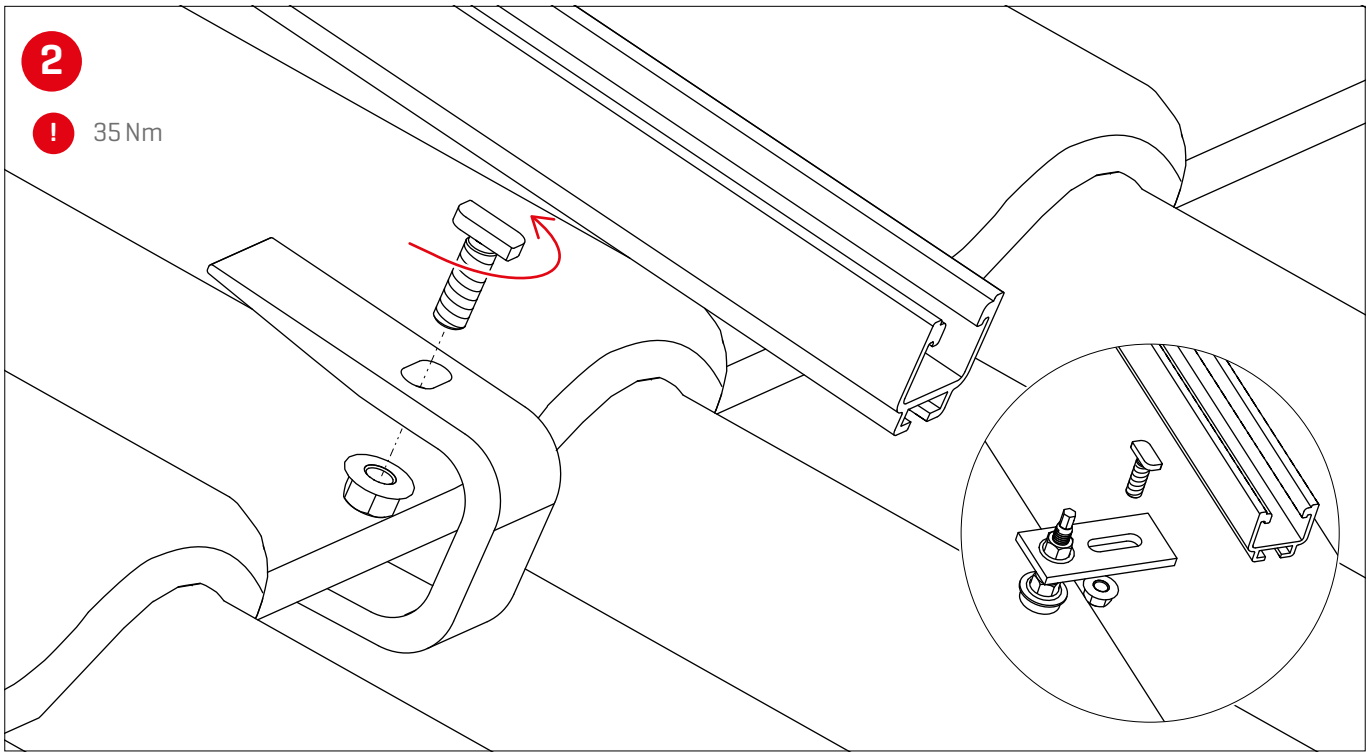

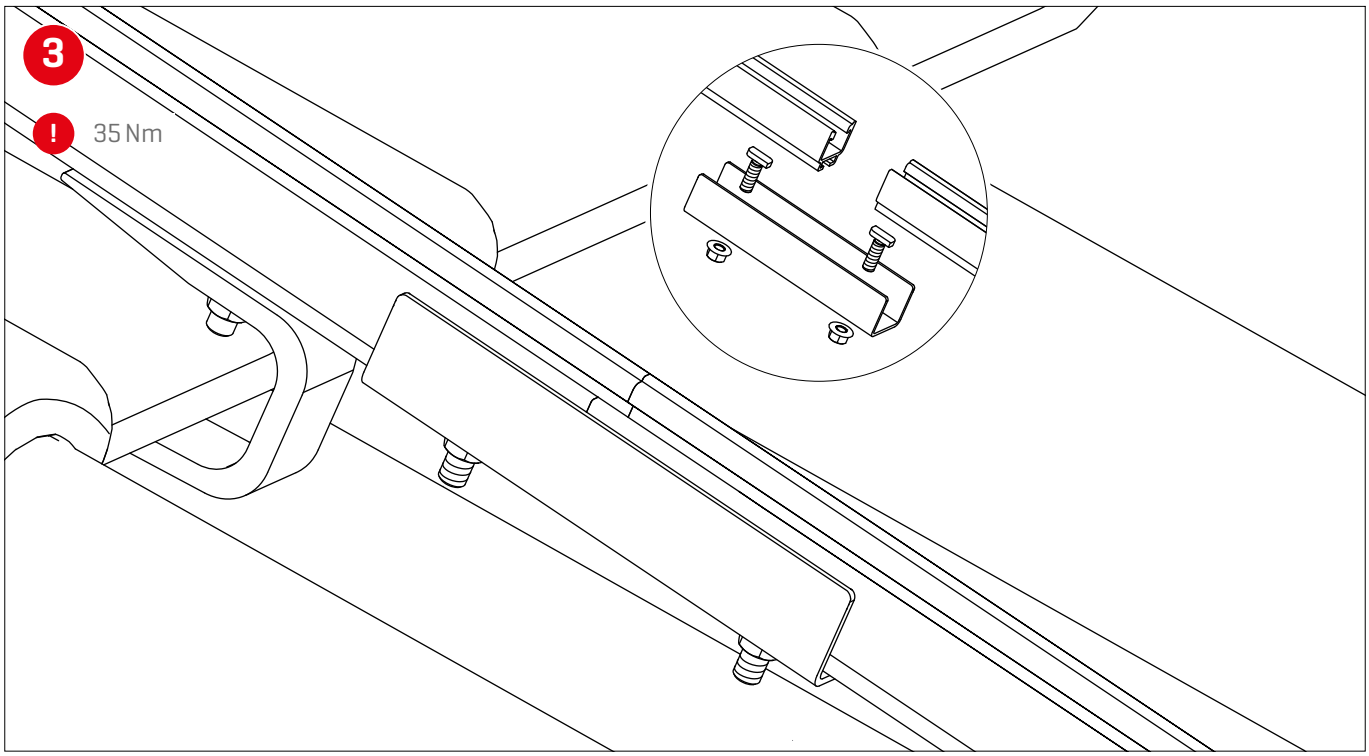
3
!
35 Nm

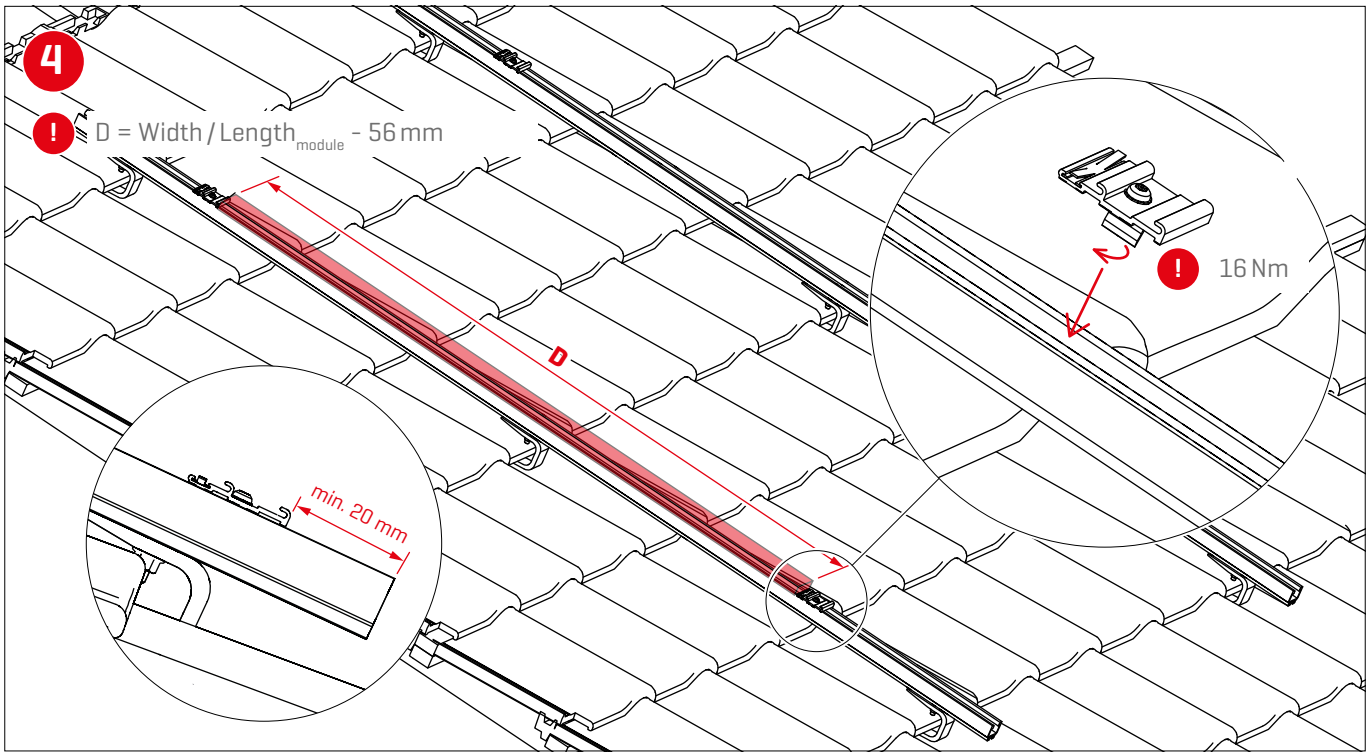
4
!
D = Width / Length module - 56 mm
D
min. 20 mm
!
16 Nm

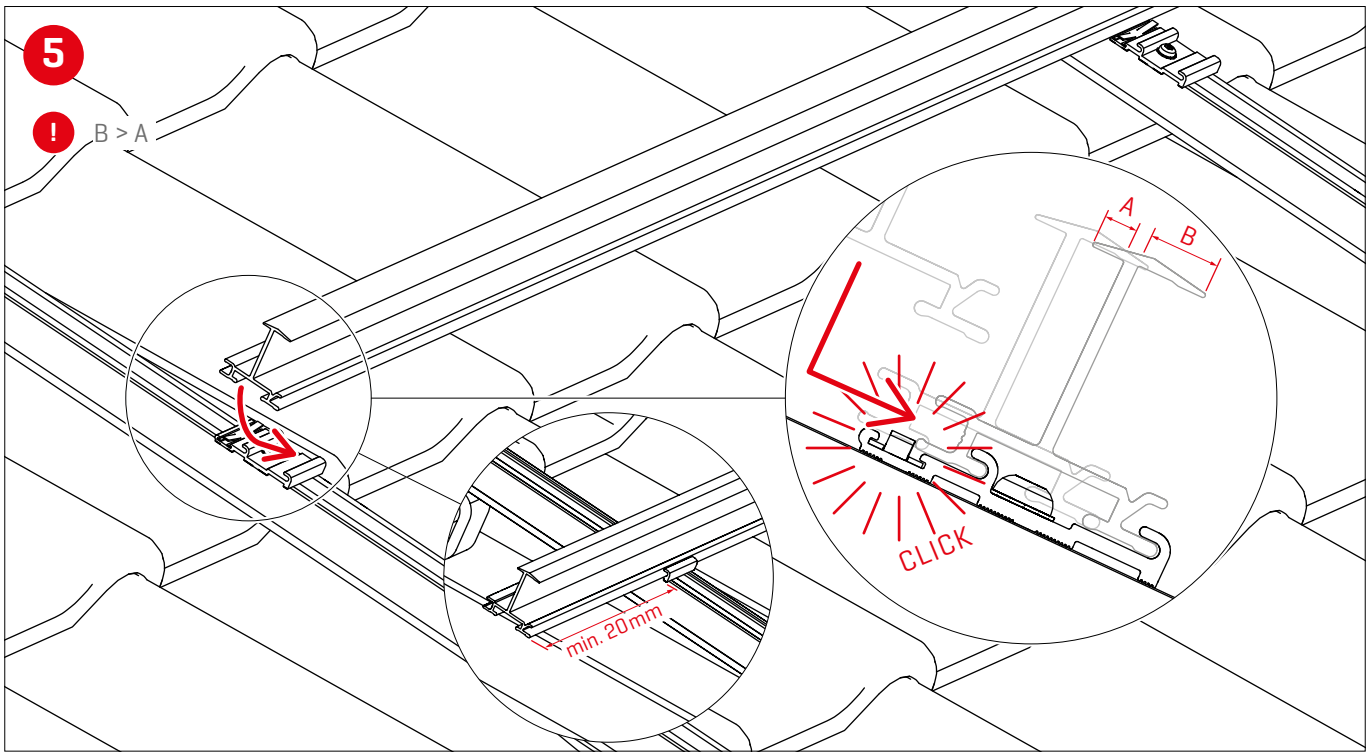
5
!
B > A
A
B
CLICK
min. 20 mm

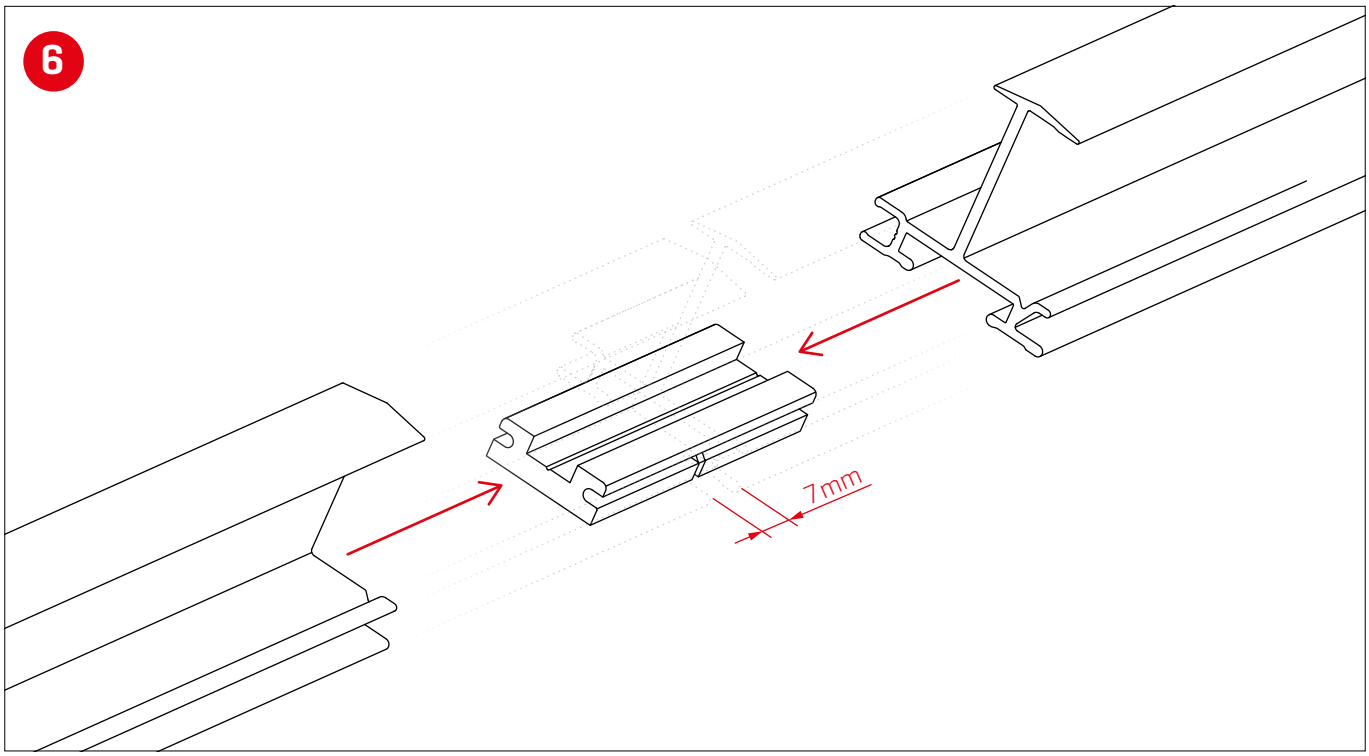
6
7 mm

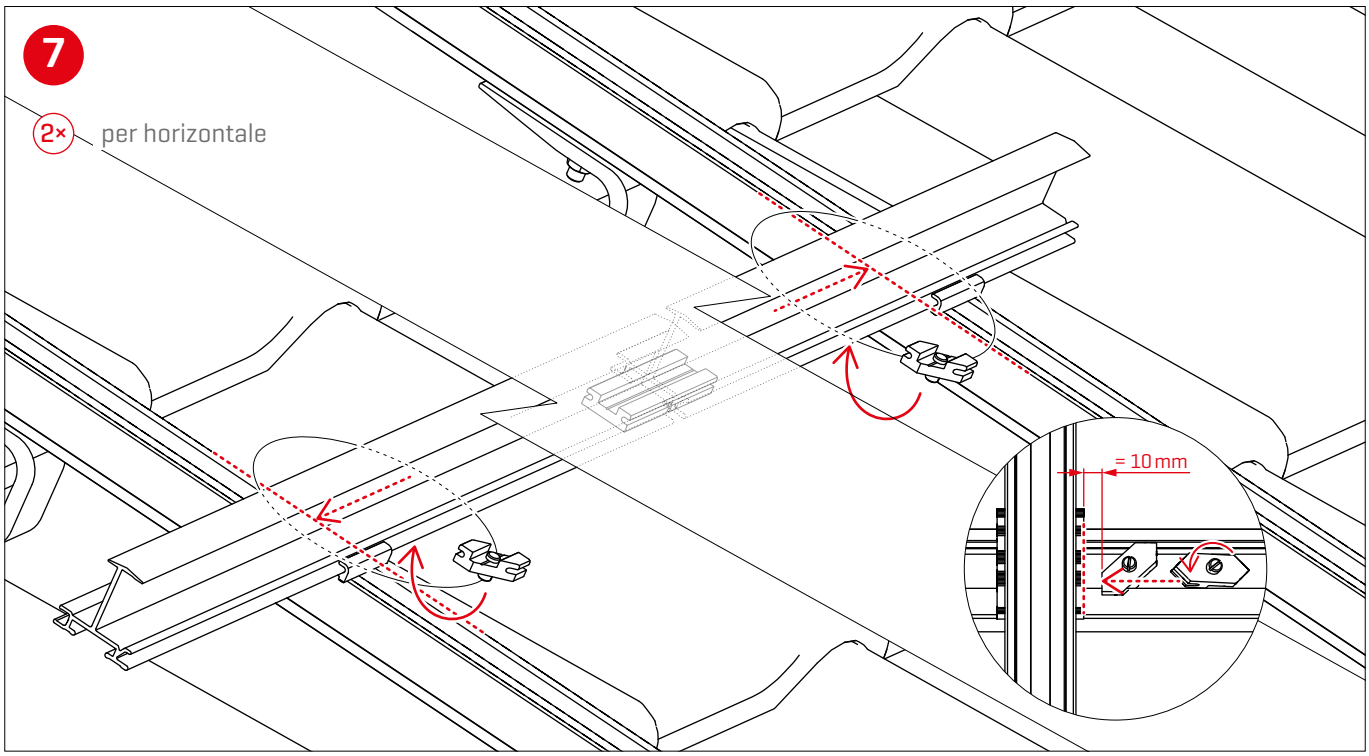

Thermal separations

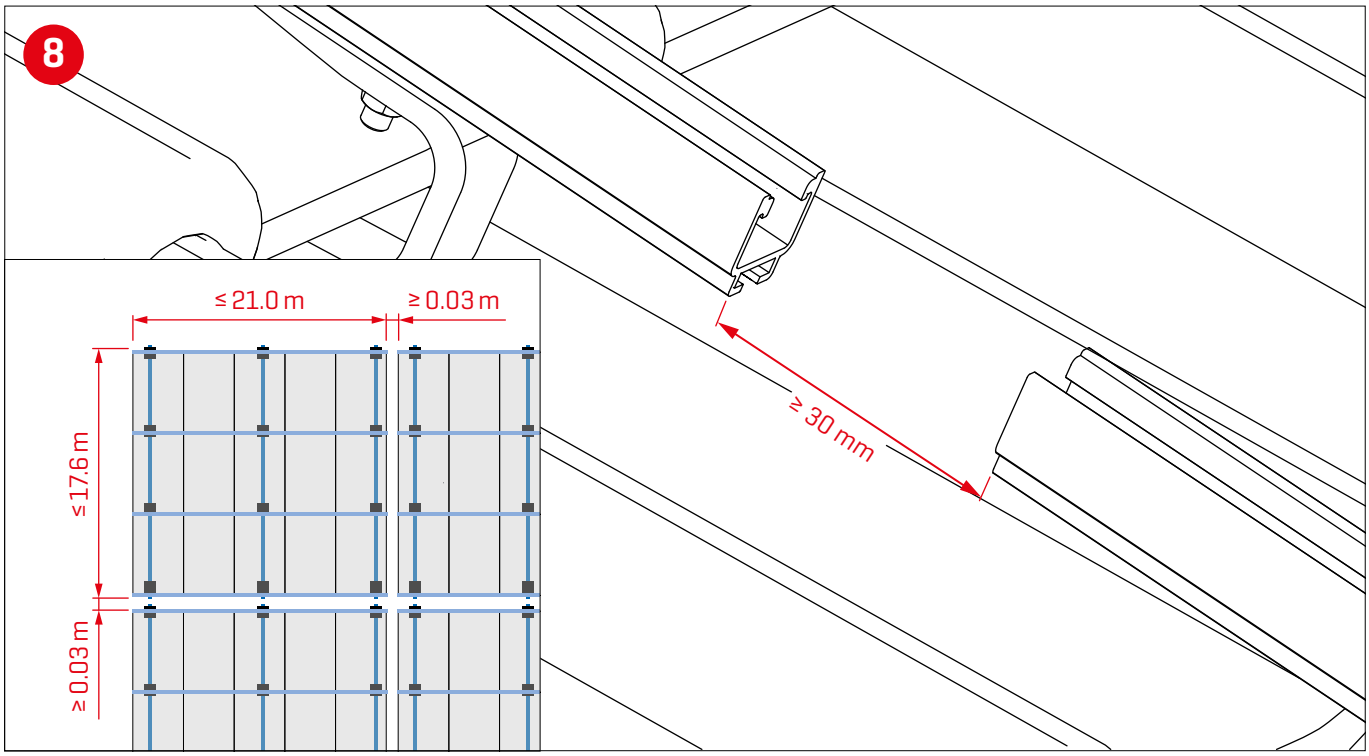

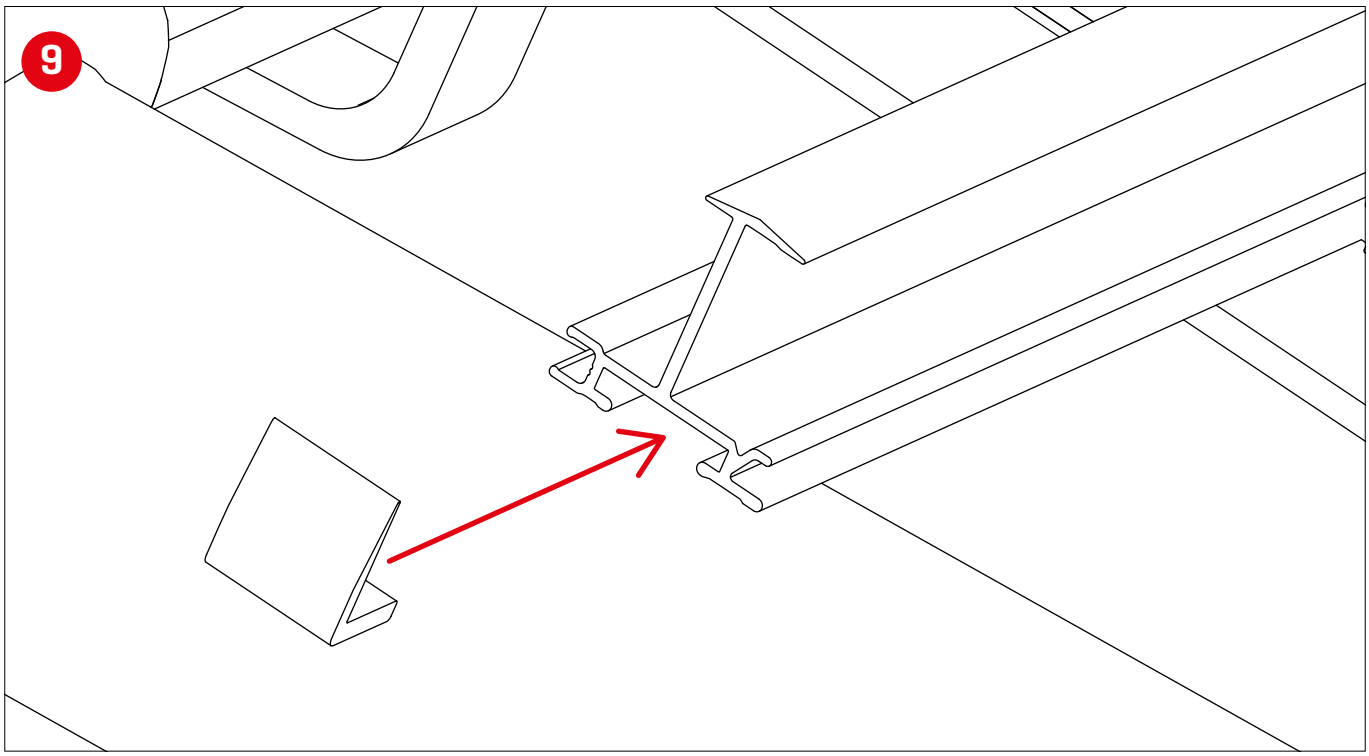
9

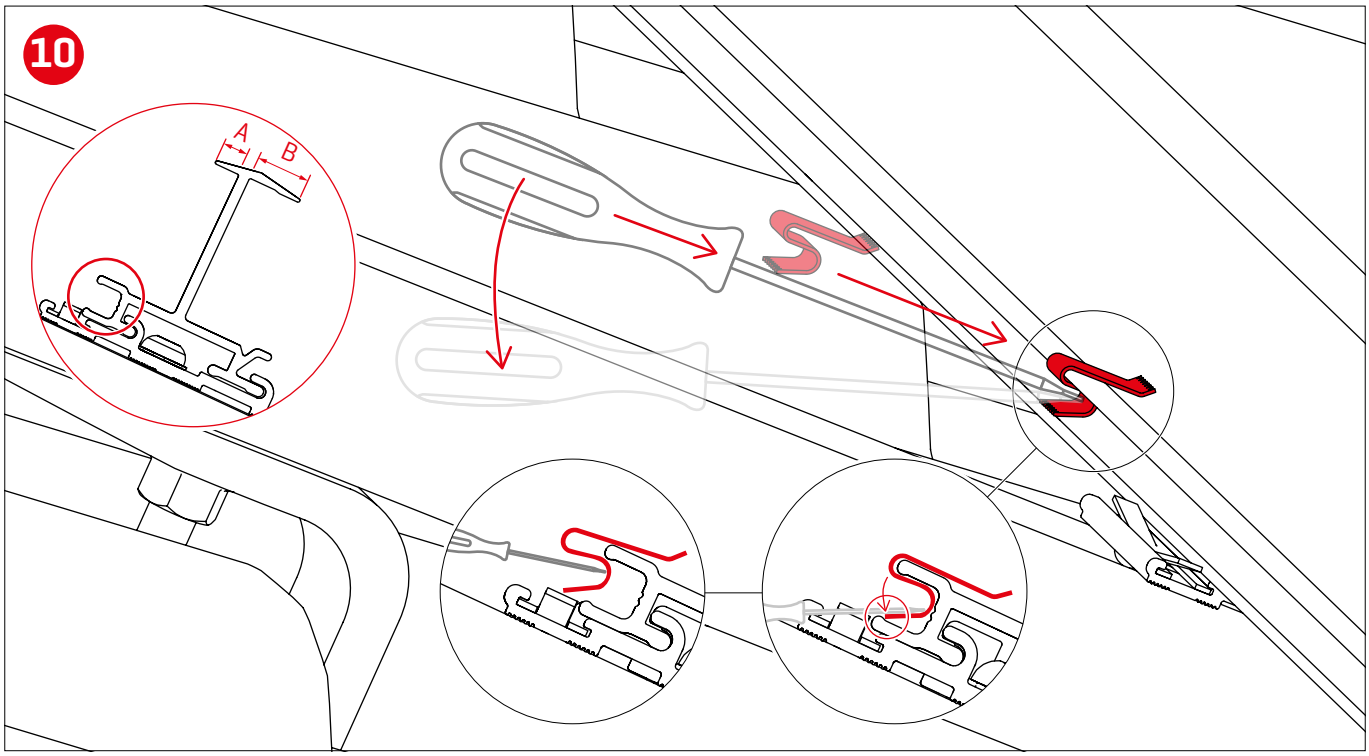
10
A
B

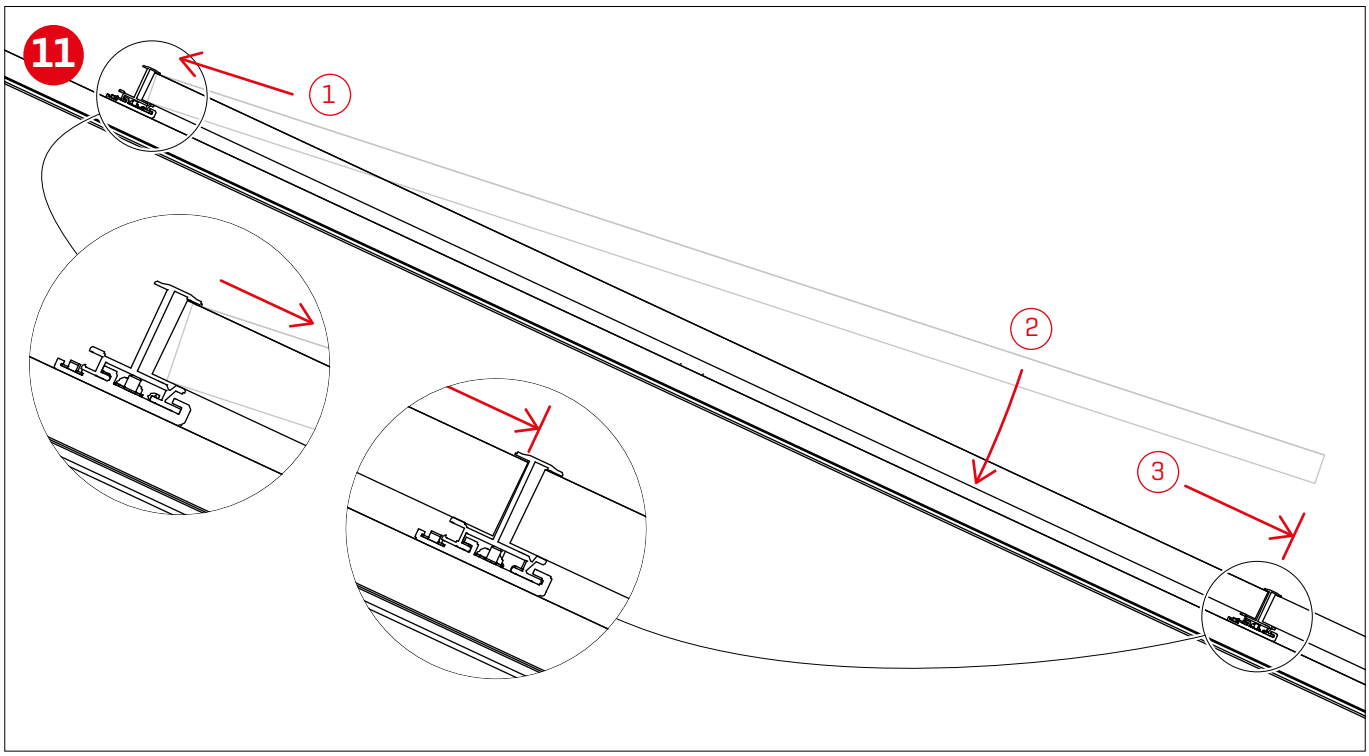
11
1
2
3

We support PV systems

Thank you for choosing a K2 mounting system.

Systems from K2 Systems are quick and easy to install. We hope these instructions have helped. Please contact us with any questions or suggestions for improvement.
Our contact data:

- **www.k2-systems.com/en/contact**
- **Service Hotline: +49 (0)7159 42059-0**

Our General Terms of Business apply. Please refer:
k2-systems.com

K2 Systems GmbH

Industriestraße 18
71272 Renningen
Germany

+49 (0) 7159 - 42059 - 0
info@k2-systems.com
www.k2-systems.com