ESDEC

INNOVATIVE **MOUNTING SYSTEMS**

ARABIC TILES

CORRUGATED ROOF

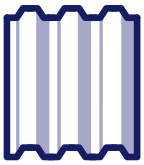

STEEL ROOF

BITUMEN

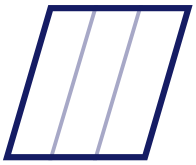

EPDM

MANUAL

CLICKFIT EVO HANGER BOLT

CLICKFIT EVO

www.esdec.com

TABLE OF CONTENTS

Introduction **3**
About this document 3
Other relevant documents 3
Earthing and bonding 3
Symbols used in this manual 3

Warranty and liability **4**
Warranty 4
Liability 4

Product information **4**
Intended use 4
Improper use 4
Compatible solar panel flange dimensions 4
Specifications 5

System and application **6**
Components **6**

Application **7**

Safety **8**
Personal protective equipment **8**
Safety warnings and regulations **8**

Installation **9**
Preparation **9**
Tightening torques 9
Preparing and sizing mounting rails **12**

Install the hanger bolts **13**
Attaching the mounting rails **18**
Optional: Attaching the MLPE clips **20**
ClickFit EVO MLPE Clip Light Weight 20
ClickFit EVO MLPE Clip Heavy Weight 21

Mounting solar panels with 60mm panel clamps **22**
Mounting the first panel **22**
Mounting the following panels **24**
Mounting the last panel **25**

Mounting the solar panels with 35 mm panel clamps **26**
Mounting the first panel **26**
Mounting the following panels **30**
Mounting the last panel **31**
Mounting multiple rows **34**

Removal and recycling **34**
General 34

INTRODUCTION

ABOUT THIS DOCUMENT

In this manual you will find the installation instructions for the ClickFit EVO mounting system for solar panels on Arabic tiles, bitumen or EPDM roof material, corrugated iron roofs and sheet metal roofs.

The system is suitable for mounting solar panels in portrait and landscape orientation.

These instructions are addressed at qualified technical personnel.

You can download the latest version of this manual from www.esdec.com.

OTHER RELEVANT DOCUMENTS

When installing the ClickFit EVO mounting system, you will need the following documents:

- The project plan, which you can create in the calculator at https://www.esdec.com/en/calculator.
- The installation manuals for the solar panels, inverters and any other components.

During the installation of the mounting system, it is important to adhere to the installation manual, the installation manual of the components, and the accompanying standards to prevent accidents. Pay special attention to (local) standards, regulations and legislation (among others):

- Local Building Regulations (latest version)
- Health and Safety at Work etc Act 1974
- Health and Safety in Roof work - HSE
- Eurocodes 0 (EN 1990 - Structural Design)
- Eurocodes 1 (EN 1991 - (Influences on structures)
- HD-IEC 60364 series - Electrical installations for low voltage
- EN-IEC 62305-2 - Protection lightning - Risk Management
- MIS 3002 – The solar PV standard
- MCS012 - Product Certification Scheme Requirements: Pitched Roof Installation Kits

EARTHING AND BONDING

Our ClickFit EVO systems are VDE certified for corrosion and bonding. According to the electrical standard HD-IEC 60364 – chapter 712, functional bonding for inverter's isolation check is necessary.

In the Esdec ClickFit EVO Series functional bonding is achieved through the EVO universal module clamp for the module frames and EVO rails. The final functional bonding connection is made by proper mounting of a separate bonding cable onto the EVO rail and an adequate bonding connection with the inverter or earthing contact.

For detailed instructions on grounding and bonding, consult the electrical standard HD-IEC 60364 and any local regulations. Please, follow the instructions of the inverter's manual. This operation needs to be done by a certified electrician.

SYMBOLS USED IN THIS MANUAL

⚠	**Warning!**	Failure to follow this instruction could result in serious injury or major damage to the product.
!	**Caution!**	Failure to follow this instruction could result in personal injury or damage to the product.
i	**Note**	Emphasises an instruction.

WARRANTY AND LIABILITY

WARRANTY
Esdec extends a 20 year product warranty. The warranty is subject to the warranty terms and general terms & conditions of Esdec. These can be found on the www.esdec.com website.

LIABILITY
The manufacturer accepts no liability for damage or injury caused by the failure to comply (strictly) with the safety guidelines and instructions in this manual, or by negligence during installation of the product and the accessories listed in this document.

Esdec reserves the right to change this document without notice.

PRODUCT INFORMATION

INTENDED USE
The ClickFit EVO mounting system is designed for mounting solar panels on pitched roofs. With this mounting system, solar panels can be positioned on the roof either with the short side at the bottom (portrait) or with the long side at the bottom (landscape).

IMPROPER USE
The mounting system is not suitable for use on types of roof other than the one specified.

COMPATIBLE SOLAR PANEL FLANGE DIMENSIONS
The universal module clamp is suitable for solar panels with a frame height between 29-50mm and a frame width of at least 12mm, where a sufficient clamping force can be applied.

Check the documentation of the solar panel supplier if the intended solar panel can withstand the loads and clamping force.

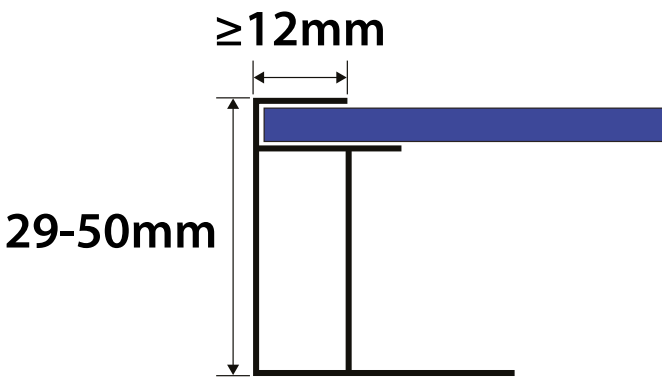

SPECIFICATIONS

Orientation of solar panels	Portrait and landscape
Maximum area of solar panels	3.92m²
Maximum field size	For horizontal and vertical rails: 15m per segment
Rail protrusion range	90-350mm
Dilatation gap	125mm
Roof material	Bitumen (insulated and non-insulated) EPDM (insulated and non-insulated) ! The thermal effect of some types of EPDM and bitumen roofing can have a negative effect on the waterproofing, causing it cannot be guaranteed on every roof. Consult the roofing supplier to determine whether the ClickFit EVO hanger bolts can be used without taking additional steps.
	Corrugated sheets ! On a corrugated roof with standard corrugation type 177/51 (NEN EN 494), use the ClickFit EVO corrugated sheet bracket (article number 1008090). At www.esdec.com you will find the corresponding manual.
	Arabic tiles
	Sheet steel
Roof structure	Purlins
	Trusses
	Engineered wood boards
Roof pitch	2-60° ! At an inclination angle of <10°, the self-cleaning effect of the panel is affected.
Maximum roof height	i Subject to Eurocode guidelines and national additions. Use the calculator to calculate the possibilities of your project.
Edge zone	30cm distance to the ridge, 30cm to the side of the roof and 30 cm to the gutter.

[1] Ensure that the module frame is compatible with the ClickFit EVO clamps before installation.

[2] Always consider the right measures related to fire spread and compartmentalization. This might influence the modules segment size.

! Enter the data in the calculator, so you are sure of choosing the right system for the terrain category, snow loads and wind zone that applies to your project.

i Depending on the roof and the result obtained from the calculator, you can lay several segments with solar panels next to each other. Always leave a minimum of 12mm of space between segments to allow for expansion of the roof.

i If your project has different specifications than these, please contact Esdec.

SYSTEM AND APPLICATION

1 COMPONENTS

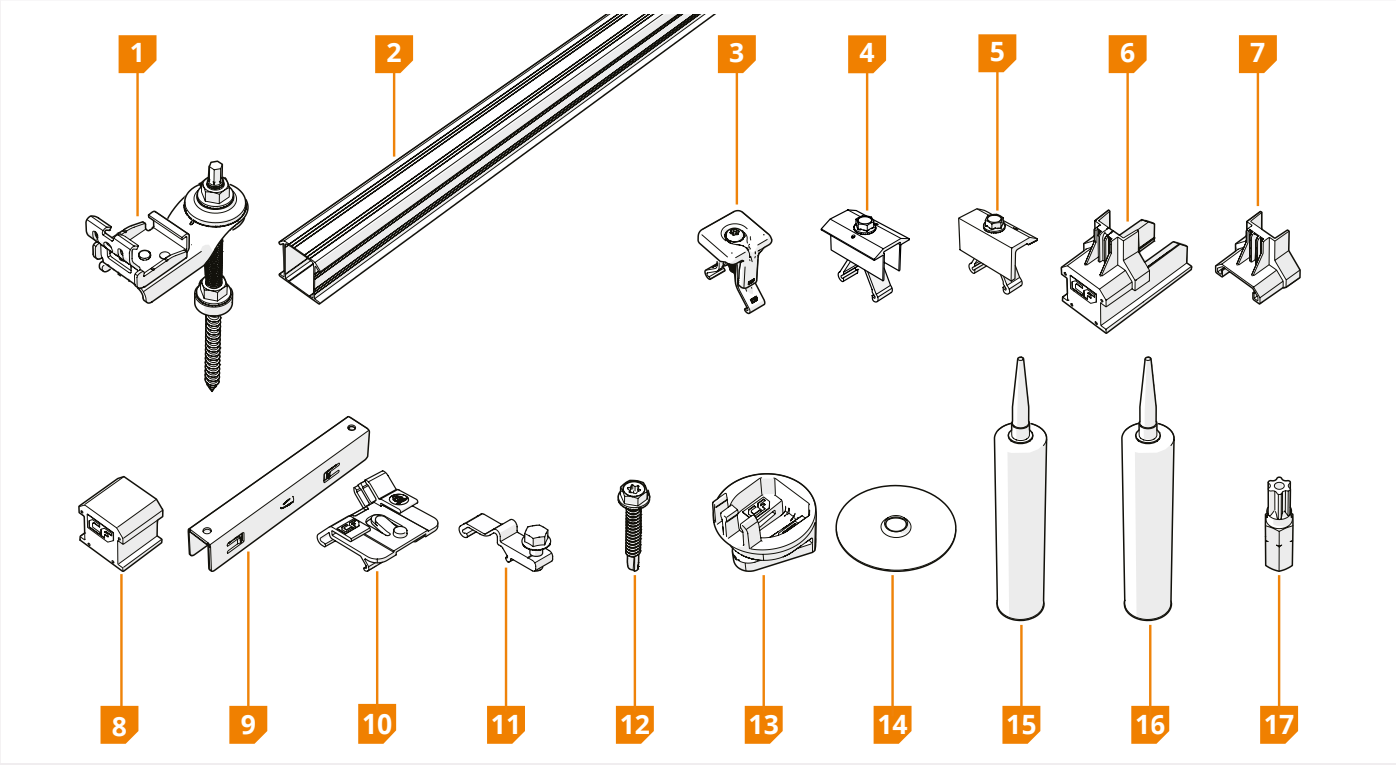

COMPONENT	ARTICLE NUMBER
1 ClickFit EVO Hanger bolt	100801 _
2 ClickFit EVO Mounting Rail	10081_ _
3 ClickFit EVO Module Clamp	1008020(-B)
4 ClickFit EVO 60 Mid Clamp Black	1008021-B
5 ClickFit EVO 60 End Clamp Black	1008022-B
6 ClickFit EVO 35 Mounting Rail End Cap	1008060(-B)
7 ClickFit EVO 35 End Clamp Support	1008065(-B)
8 ClickFit EVO End Cap without end clamp support	1008066(-B)

ACCESSORY	ARTICLE NUMBER
9 ClickFit EVO Mounting Rail Coupler	1008061
10 ClickFit EVO MLPE Clip Light Weight	1008067
11 ClickFit EVO MLPE Clip Heavy Weight	1008068
12 ClickFit EVO Self-drilling screw 6,3x42mm SW10/T30	1003016
13 ClickFit EVO mounting set	1008064
14 Hanger bolt washer Inox 80mm	1003070
15 Sealing kit for bitumen roofing	
16 Kit for EPDM Roofing	
17 ClickFit EVO Screw Bit Torx 30	1008069

Check that the correct components are present in the required numbers according to the project plan generated by the calculator.

2 APPLICATION

Use the calculator to determine the correct rail orientation for your project. The calculator takes into account, for example, the type of roof covering and the structure supporting the roof.

1. Check the roof type and the roof structure type. Is it a roof with purlins or trusses, or with solid engineering wood boards?
2. Look up the type of roof covering of your project in the table.
3. Check the table for the recommended orientation of the solar panels and rails.

ROOF MATERIAL	TRUSSES	PURLINS	ENGINEERED WOOD BOARDS
BITUMEN INSULATED	Portrait panels and horizontal rails	Landscape panels and vertical rails	Portrait panels and horizontal rails Landscape panels and vertical rails
BITUMEN UNINSULATED	×	×	Portrait panels and horizontal rails Landscape panels and vertical rails
EPDM (INSULATED AND NON-INSULATED)	×	×	Portrait panels and horizontal rails Landscape panels and vertical rails
ARABIC TILES	×	×	Portrait panels and horizontal rails Landscape panels and vertical rails
CORRUGATED SHEETS	×	Portrait panels and horizontal rails Landscape panels and vertical rails	×
STEEL ROOF TRAPEZOIDAL	×	Landscape panels and vertical rails	×
STEEL ROOF CORRUGATED SHEETS	×	Landscape panels and vertical rails	×
STEEL ROOF TILES SHEETS	Portrait panels and horizontal rails	Landscape panels and vertical rails	Portrait panels and horizontal rails Landscape panels and vertical rails

Ensure the threaded part of the Hangerbolt is inserted at least 50mm into the substructure without protruding through.

SAFETY

1 PERSONAL PROTECTIVE EQUIPMENT

	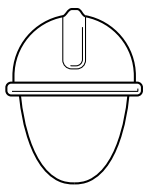				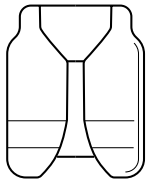	
Hearing protection	Safety helmet	Safety glasses	Face masks	Safety gloves	Safety clothing	Safety shoes

2 SAFETY WARNINGS AND REGULATIONS

Warning!

- Installation work should always be carried out by at least two skilled people.
- Do not use components from other mounting systems.
- Do not leave out parts.
- Always work according to the current regulations for working on roofs.
- Do not perform the installation in strong winds, or when the roof is slippery or wet.
- Always work on the roof with fall protection and, if necessary, with safety nets and edge protection.
- Never stand on or in the gutter.
- Always use a lifting aid or hoisting device when moving heavy equipment.
- Always place ladders on a strong, stable surface.

Caution!

- Walk as little as possible on the roof. Use an aerial platform, ladder or other solution.
- Never walk on the system or on the solar panels.

INSTALLATION

1 PREPARATION

1 INSPECT THE ROOF.

☐	The roof is in good condition.
☐	The roof construction has sufficient bearing capacity to support the installation, taking into account wind and snow loads.
☐	! The thermal effect of some types of EPDM and bitumen roofing can have a negative effect on the waterproofing, causing it cannot be guaranteed on every roof. Consult the roofing supplier to determine whether the ClickFit EVO hanger bolts can be used without taking additional steps.

2 CHECK THE PROJECT PLAN AND COMPONENTS.

☐	Check the project plan. Is there no project plan? Then create one in the online calculator before starting installation.
☐	Check that all components are present (page 5).
☐	Determine the position of the hanger bolts. Use the purlins or trusses if present.

3 MAKE SURE ALL THE REQUIRED TOOLS ARE AT HAND.

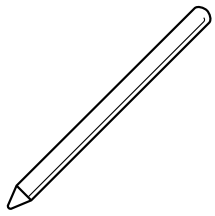	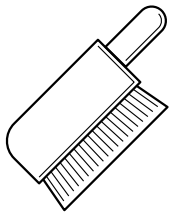	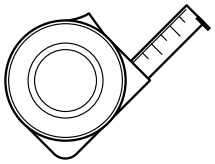	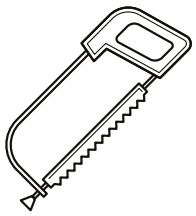	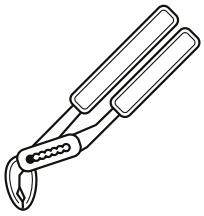
Marker or chalk	Brush	Tape measure	Hacksaw	Water pump pliers
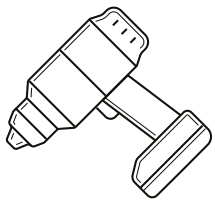	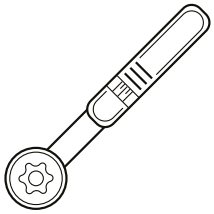	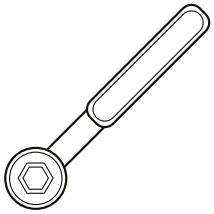	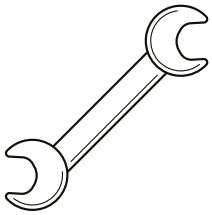	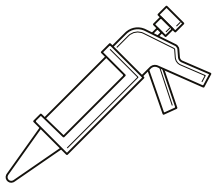
Cordless screwdriver	Torque wrench	Ratchet with hexagon socket S13	Open-end wrench (2x)	Mastic gun

	Hanger bolt M10	Hanger bolt M12
Drill through roofing material	12.5mm	14mm
Predrill holes in roof structure	5mm	7mm
Hexagon socket	S7	S10
Open-end wrench	S15	S19

TIGHTENING TORQUES

! Always use a torque wrench. Make sure that the bit is correctly and completely inserted in the screw head when tightening, in view of the high tightening torque.

Screw	Tightening torque
ClickFit EVO Module Clamp	4.5 Nm
Mounting screw for vertical rail	1 Nm
ClickFit EVO MLPE Clip Heavy Weight	8-12 Nm
ClickFit EVO 60 End Clamp Black	16.5 Nm
ClickFit EVO 60 Mid Clamp Black	16.5 Nm

4 CLEAN AND TIDY THE ROOF.

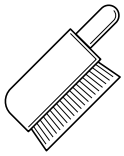

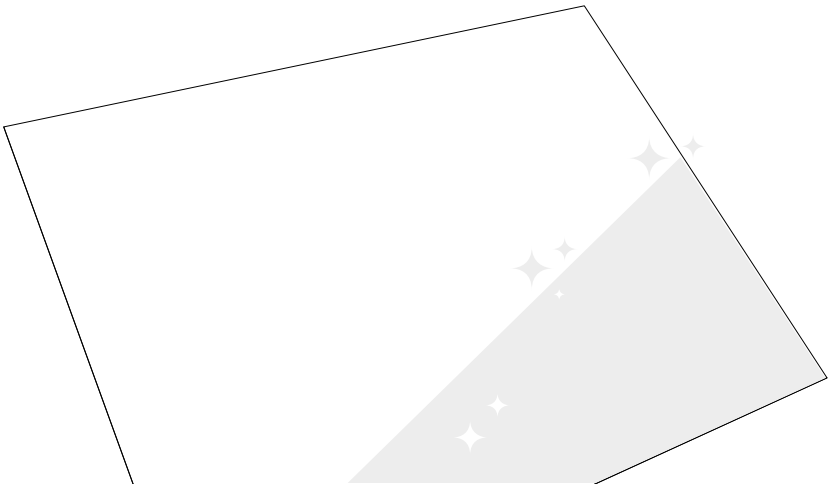

5 DETERMINE THE POSITION OF THE SOLAR PANELS ON THE ROOF

- Consider the (local) fire regulations for photovoltaic installations. To mitigate the risk of fire spread, the fire compartments of the object must be respected. The PV system should not be placed over fire partition walls and a minimum distance of 30 cm must be kept. Likewise, it is wise to keep space in relation to skylights, lighting globes, corners and potential fire hazards.
- Develop a project plan using the ESDEC calculator and adhere to its guidelines. Access the calculator at calculator.eu.esdec.com.
- The distance from the edge of solar panels to both the ridge and the gutter must be at least 30cm.
- The distance from the solar panels to the side of the roof must be at least 30cm.
- Take into account sunlight and shade over the whole year. If necessary, use a power optimizer or micro inverter to get the most out of your installation.

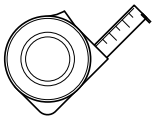

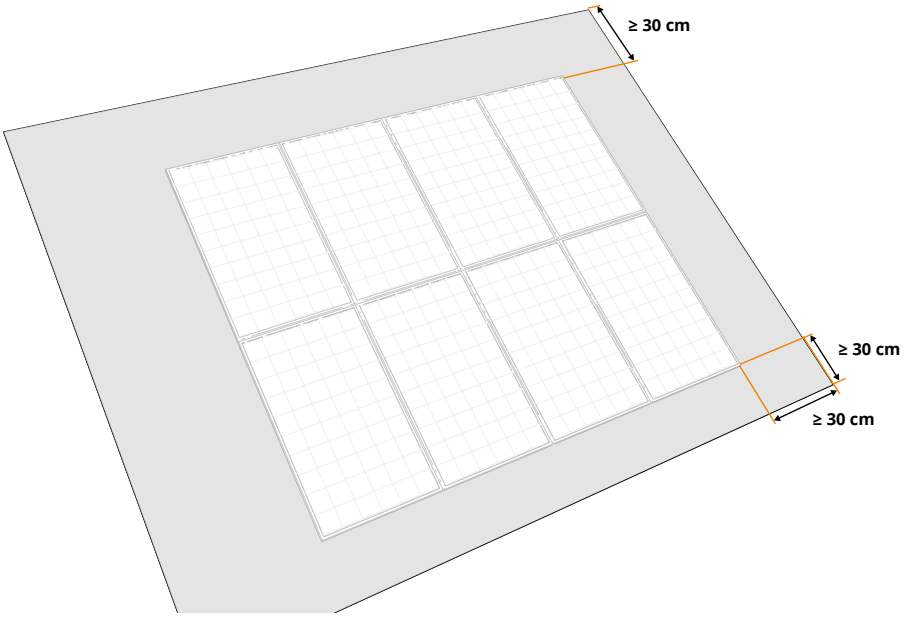

6 DRAW THE LINES AND END POINTS FOR THE MOUNTING RAILS

Consult the project plan to determine the position of the mounting rails for your panel.

Rail lengths can be found in the project plan.

For mounting in landscape orientation, the mounting rails should be placed at around ¼ of the short sides of the panel.

For mounting in portrait orientation, the mounting rails should be placed at around ¼ of the long sides of the panel.

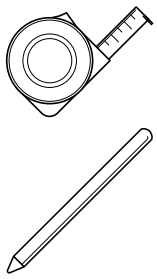

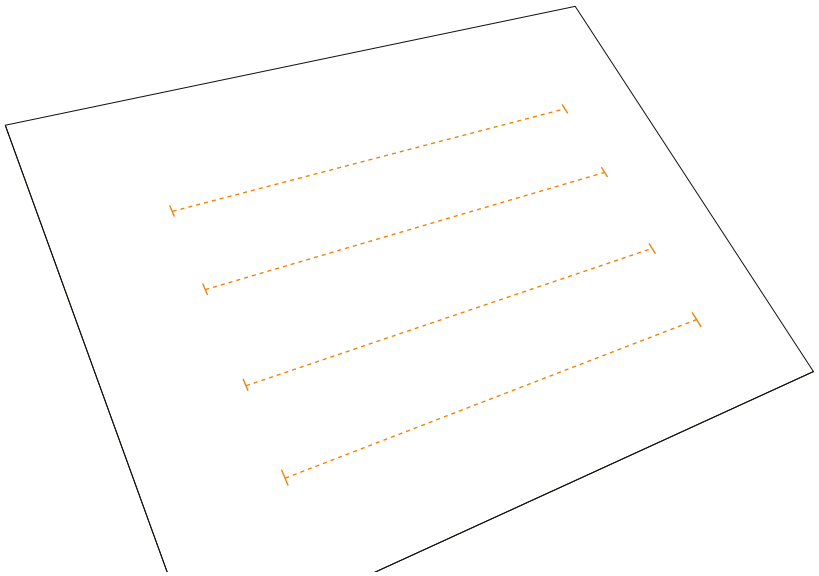

7 MARK THE POSITION OF THE HANGER BOLTS.

Preferably use existing screw holes for the installation of the hanger bolts, especially on corrugated roofs. If you use too many screws in a corrugated sheet roof, it means that the roof material may have too little space to compensate for thermal expansion/contraction.

Consult the project plan to determine the position of the hanger bolts for your project.

When measuring and marking the field, take into account the position of the purlins or trusses.

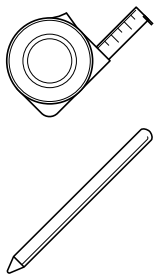

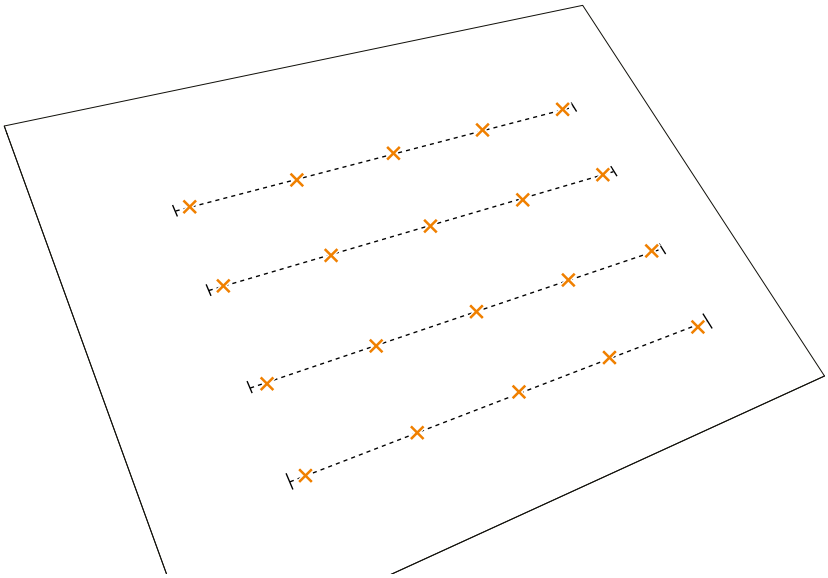

2 PREPARING AND SIZING MOUNTING RAILS

1 CONSULT THE PROJECT PLAN FOR THE OVERALL LAYOUT OF THE SOLAR PANEL SEGMENTS.
2 CALCULATE THE FULL LENGTH OF THE SOLAR PANEL LAYOUT, ACCOUNTING FOR GAPS AND/OR SPACING.
3 CALCULATE THE NECESSARY MOUNTING RAIL EXTENSIONS AND ADJUSTMENTS.

Measure the solar panels and add 12mm between each solar panel for the universal module clamp (20mm for the ClickFit EVO 60mm clamp). Add 20-35mm on each side for mounting the end clamp and end cap (50-70mm for the ClickFit EVO 60mm clamp).

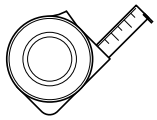

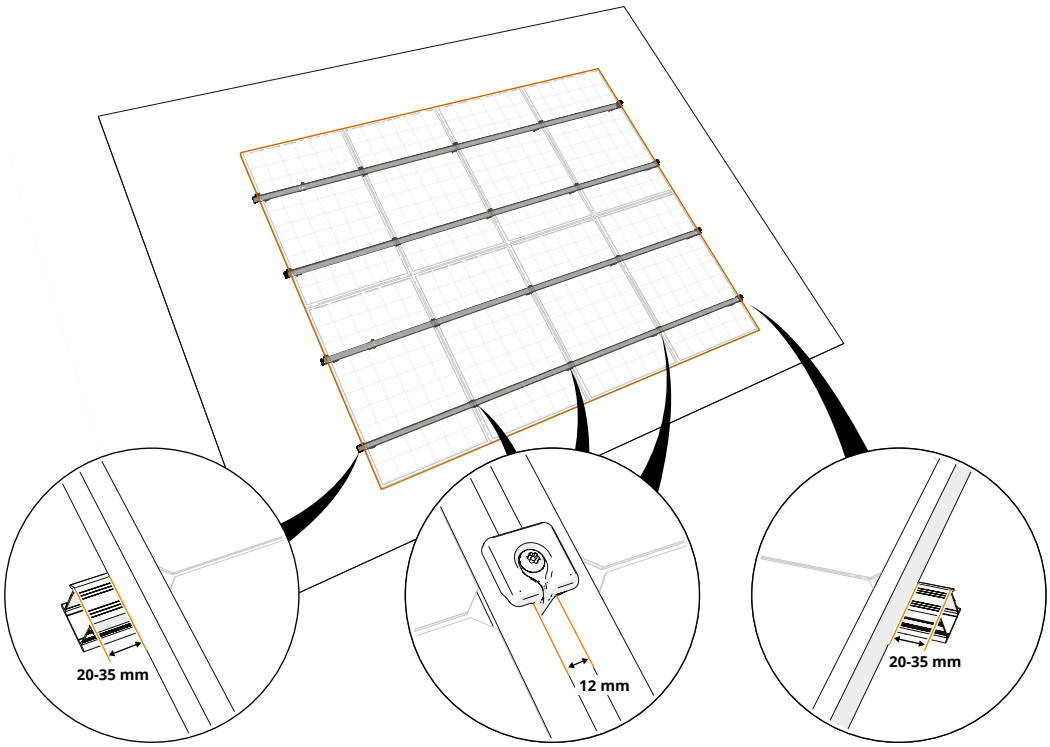

4 USE COUPLERS TO CONNECT THE MOUNTING RAILS, IF NECESSARY

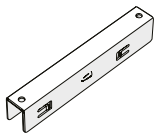

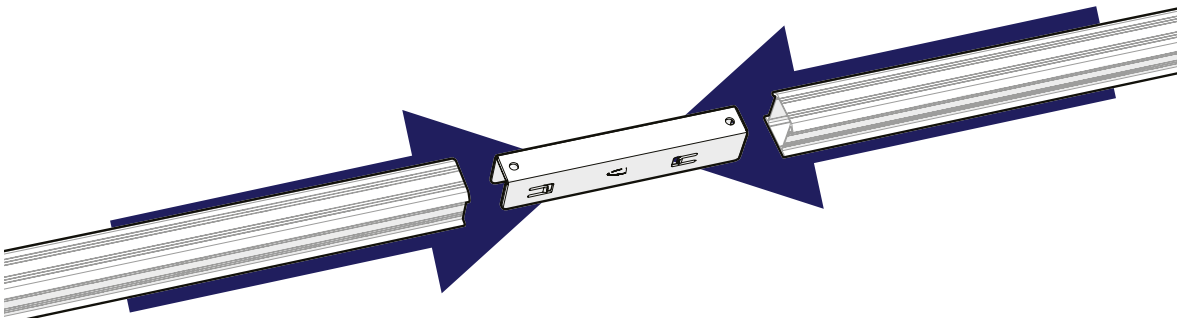

5 IF THE OVERHANG IS GREATER THAN 250MM: EXTEND THE MOUNTING RAIL TO THE NEXT RAFTER OR BATTEN.
6 CUT THE MOUNTING RAILS TO SIZE.

a. If the calculated overhang of the solar panel is **more** than 250mm beyond the marked position of the last hangerbolt, mark the position of an extra hangerbolt on the nearest rafter or batten. Extend the mounting rail to 50mm beyond the extra hangerbolt.

The additional 50 mm extension allows for proper fitting of an end cap (art. no. 1008066(-B)) to the mounting rails.

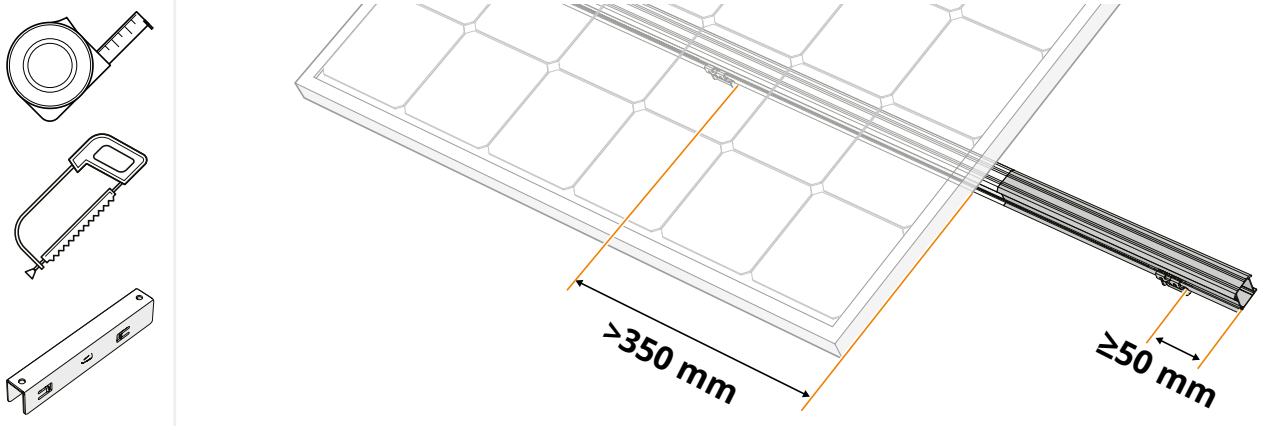

b. If the calculated overhang is less than 250mm beyond the marked position of the last hangerbolt, keep 20-35mm rail length overhang for mounting the end cap (art. no.) (>40mm for the ClickFit EVO 60mm clamp).

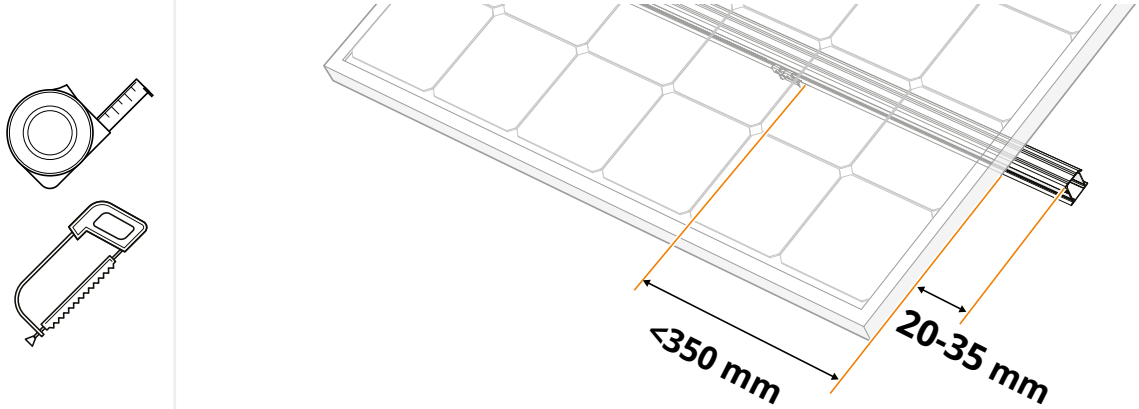

3 INSTALL THE HANGER BOLTS

- [ ] Are you installing hanger bolts in a wooden roof structure? Then continue to step 3.1.
- [ ] Are you installing hanger bolts in a concrete roof structure? Then continue to step 3.3.

1 PREDRILL THE HOLES IN THE ROOF (WOODEN SUBSTRUCTURE: PURLINS/TRUSSES)

- The substructure must be at least 50 mm thick.
- Clear the drill hole and surrounding area of drill cuttings.
- For corrugated roof: use the existing screw holes as much as possible. Make sure that you do not place too many screws in a corrugated roof, because then the roof material will not have enough space to work thermally.

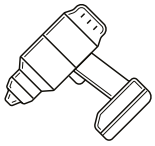

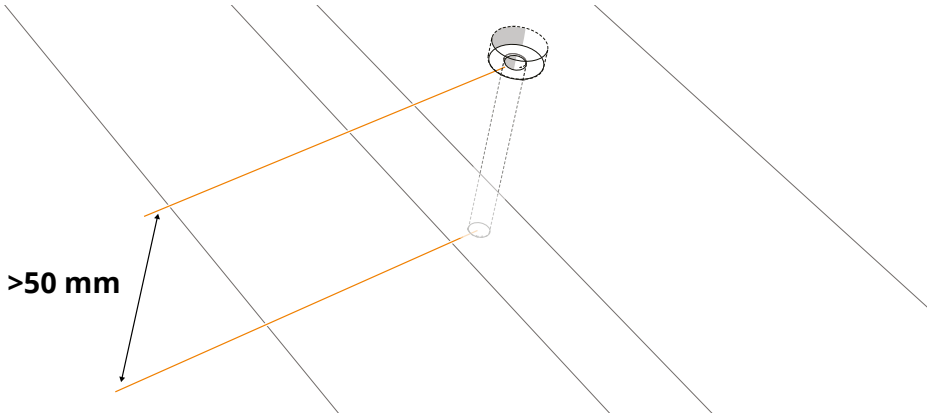

Diameter of hanger bolt	Drill through roofing material	Predrill holes in roof structure
M10	Ø 12,5mm	Ø 5 mm
M12	Ø 14 mm	Ø 7 mm

2 TIGHTEN THE HANGER BOLT

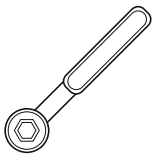

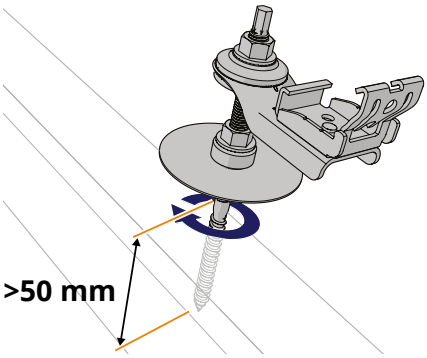

Bitumen roofing insulated

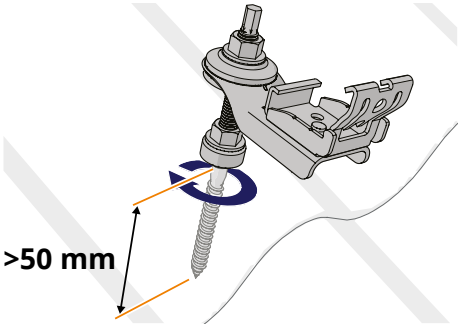

Corrugated roofs

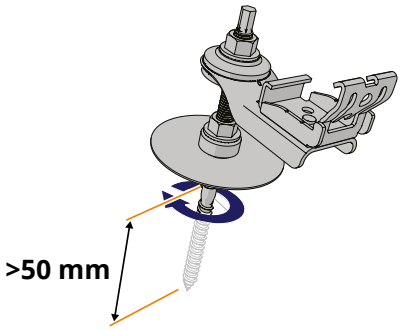

Bitumen uninsulated / EPDM (insulated and non-insulated)

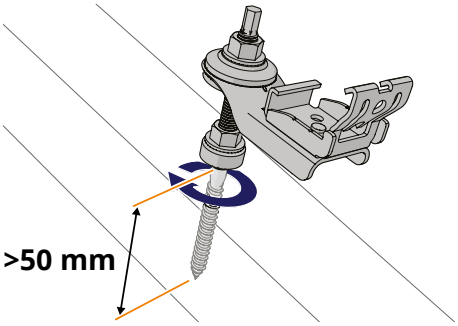

Sheet steel

- Make sure you that the hanger bolt goes into the structure straight (at the right angle).
- Use the hanger bolt washer (article no. 1003070) on a bitumen or EPDM roof.

Continue to step 3.6.

3 PREDRILL THE HOLES IN THE ROOF (CONCRETE SUBSTRUCTURE)

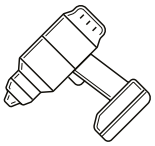

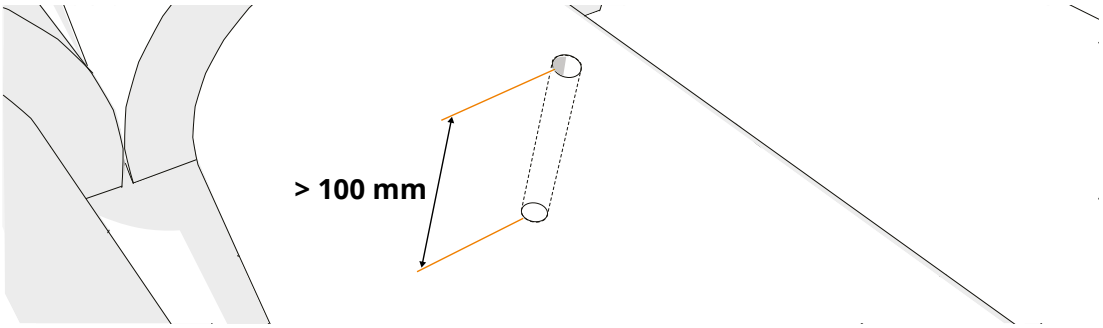

Arabic tiles

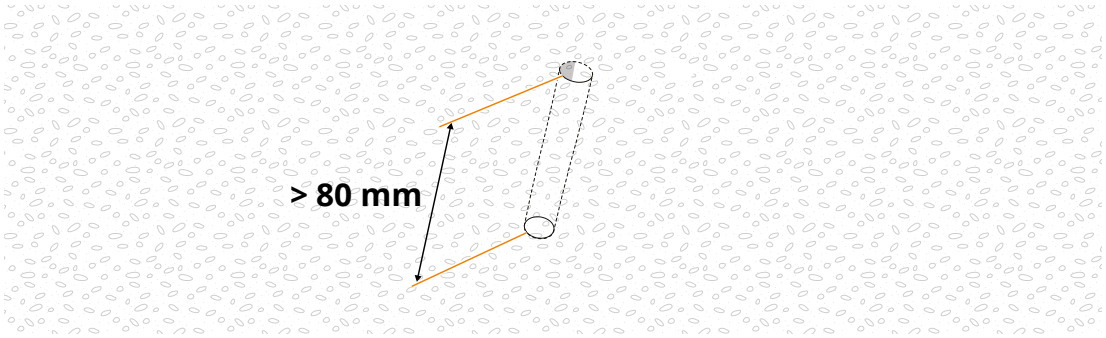

Concrete slab

Pre-drill Arabic tiles at the highest point on the roof tile. This ensures good drainage. The drilling depth is at least 100 mm.

For a concrete slab, the drilling depth is at least 80 mm.

Clear the drill hole and surrounding area of drill cuttings.

Diameter of hanger bolt	Predrill holes in roof structure
M10	Ø 14 mm
M12	Ø 16 mm

4 YOU USE A CHEMICAL ANCHOR TO FIX THE HANGER BOLT. CONSULT THE INSTRUCTIONS FROM THE SUPPLIER OF THE CHEMICAL ANCHOR BEFORE STARTING.

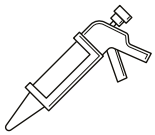

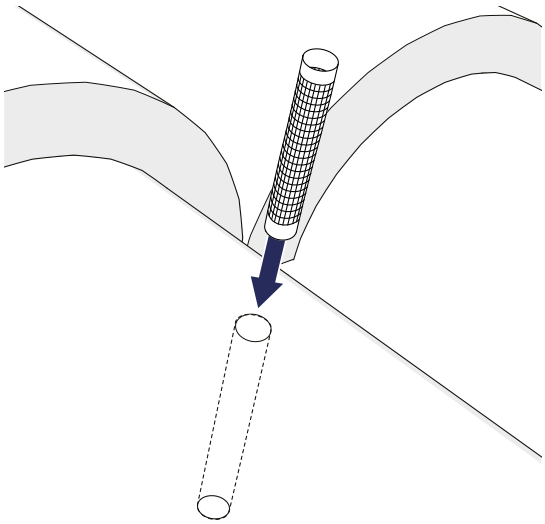

Arabic tiles in cement

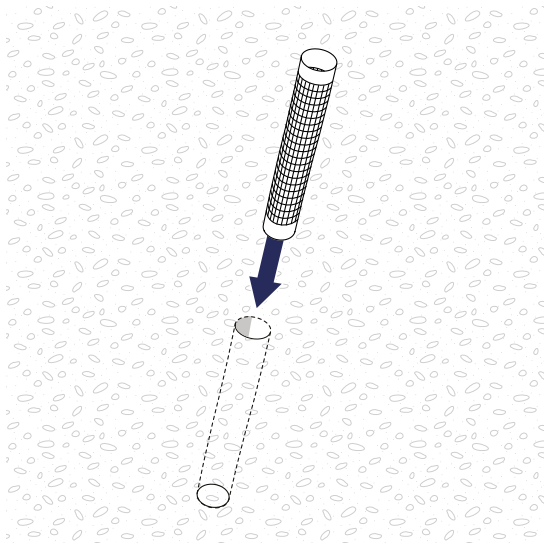

Concrete slab

5 INSERT THE HANGER BOLT AND ALLOW CHEMICAL ANCHOR TO HARDEN.

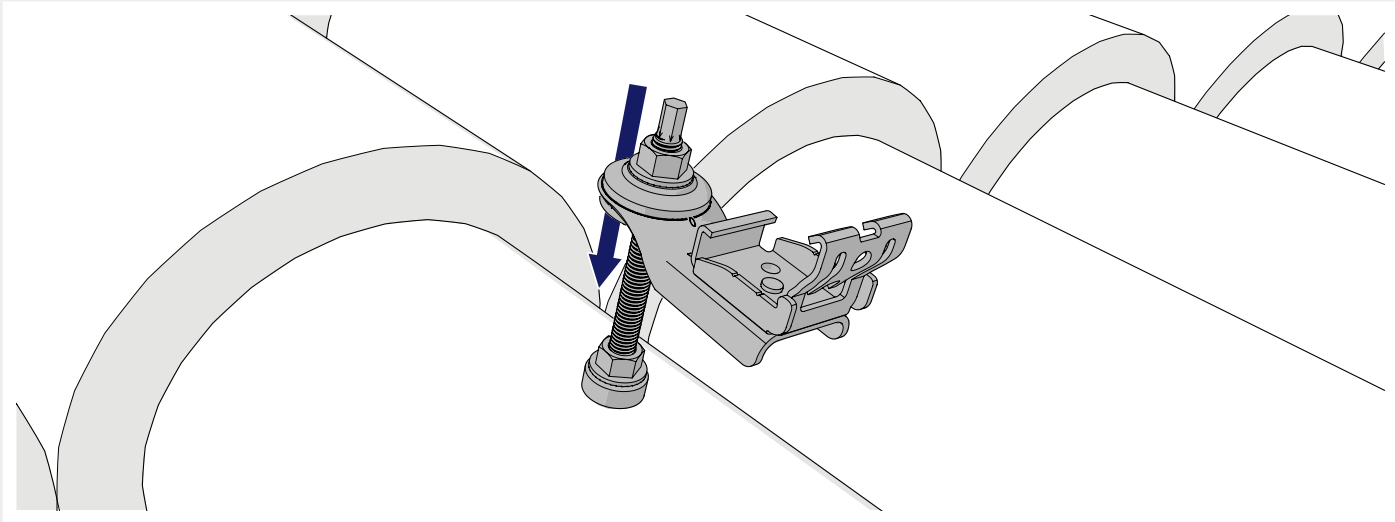

Align the hanger bolts with each other.

6 TIGHTEN THE NUT SO THAT THE RUBBER SEAL DEFORMS AND THE SCREW HOLE IS SEALED

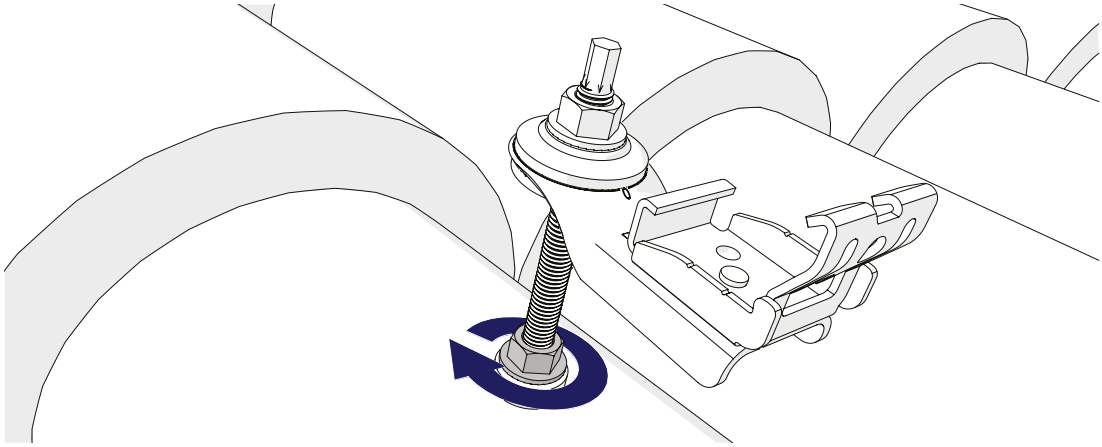

7 SEAL THE HOLE

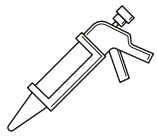

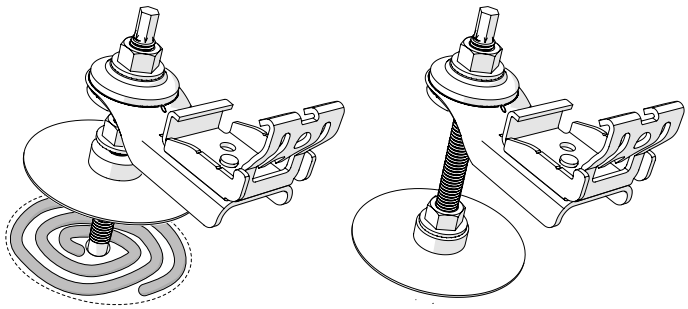

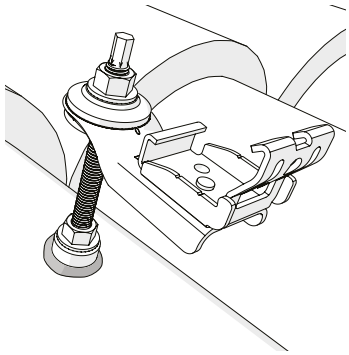

Bitumen roof material:
- Sealing kit for bitumen roofing (not included)
- Hanger bolt washer RVS 80 mm (article no. 1003070)

EPDM roof material:
- EPDM kit
- Hanger bolt washer RVS 80 mm (article no. 1003070)

Arabic tiles:
- Waterproofing kit (not included)

8 ROTATE THE CLICK CONNECTION INTO THE CORRECT ORIENTATION

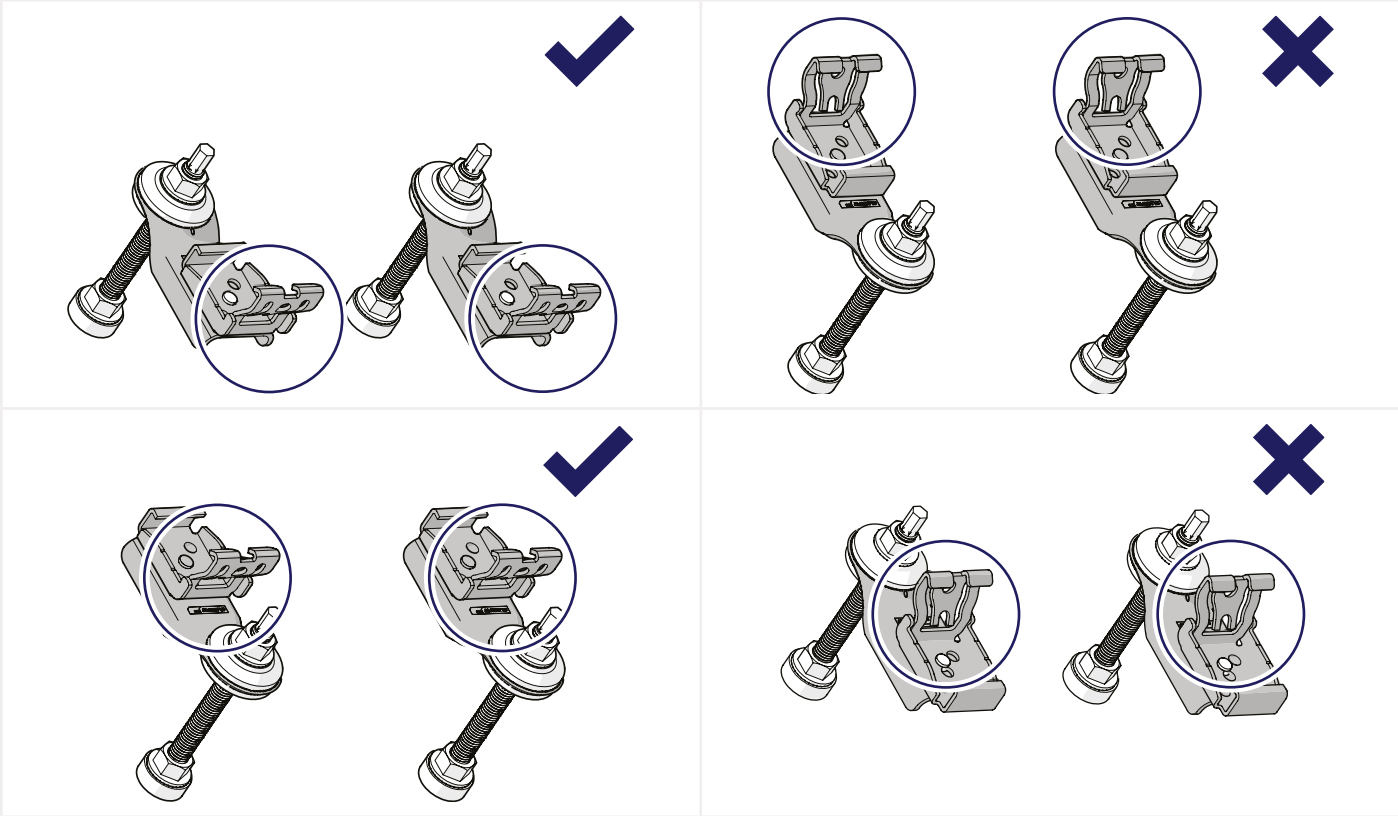

For horizontal rail orientation, make sure that the cable tray of the click connections is always pointing downwards.

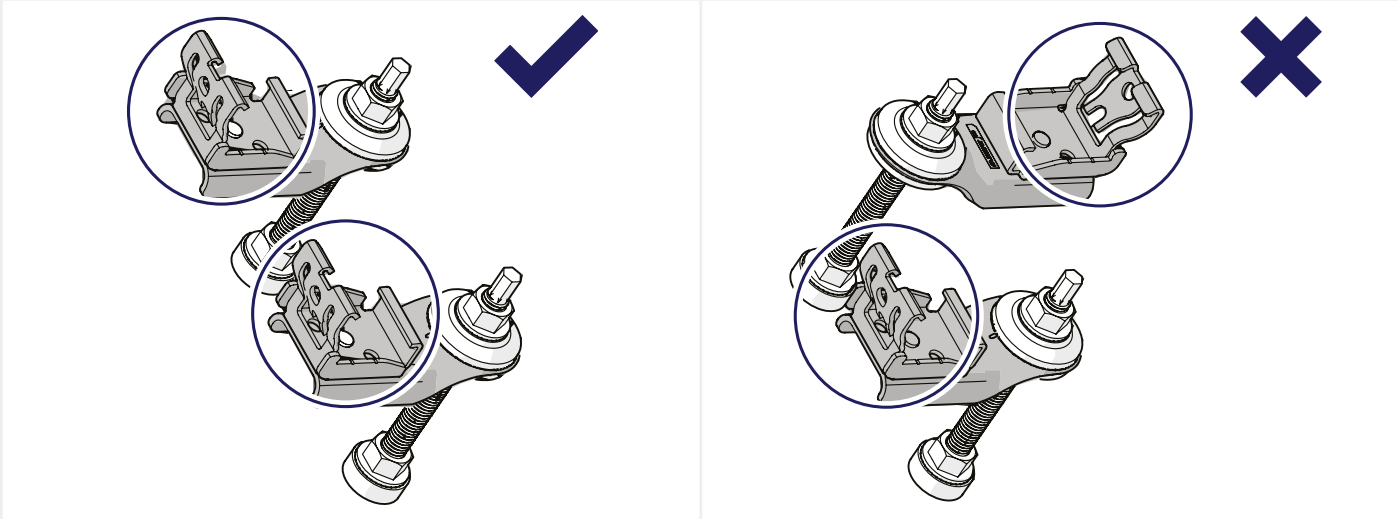

For vertical rail orientation, ensure that the adapters are all placed on the same side of the hanger bolt with the click connections pointing in the same direction.

9 TIGHTEN THE NUT ON THE TOP OF THE HANGER BOLT

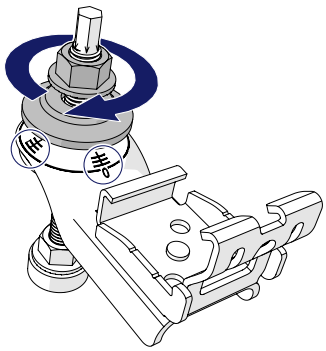

Use the cross hairs on the adapter for a good basic position of the EVO click connection and to compensate for any roof irregularities.

Diameter of hanger bolt	Tightening torque
M10	Minimum of 25 Nm
M12	Minimum of 40 Nm

4 ATTACHING THE MOUNTING RAILS

1 USE THE NUTS TO ALIGN THE CLICK CONNECTIONS AND ADAPTERS IN THE DIFFERENT AXES.

Are the hanger bolts not properly aligned in relation to each other? Use the mounting rail to adjust the hanger bolts. Loosen one or both nuts half a turn and click the mounting rail into the click connections. The rigidity of the rail ensures that the adapters and click connections set themselves into the correct position. Then retighten the nuts.

M10: Minimum of 25 Nm
M12: Minimum of 40 Nm

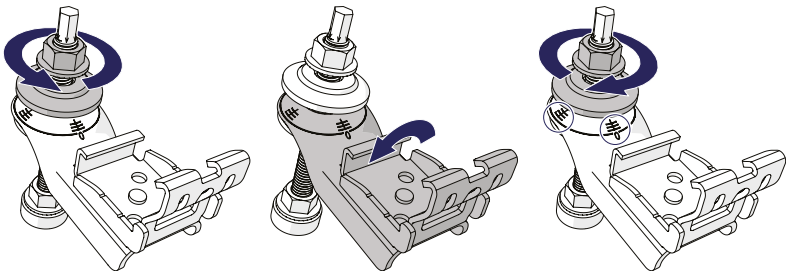

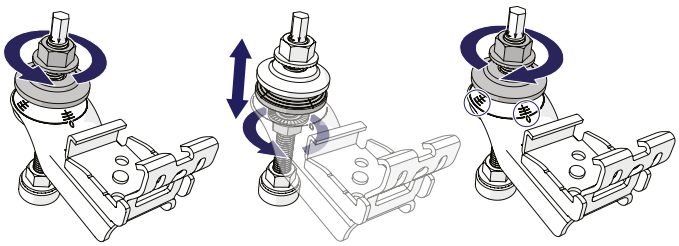

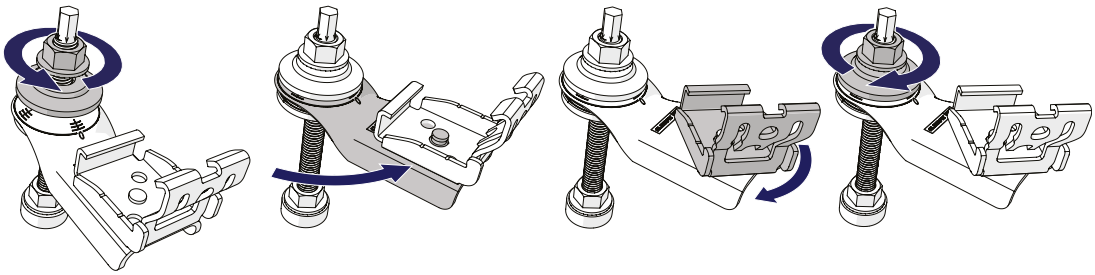

2 PLACE THE MOUNTING RAIL IN THE CLICK CONNECTION.

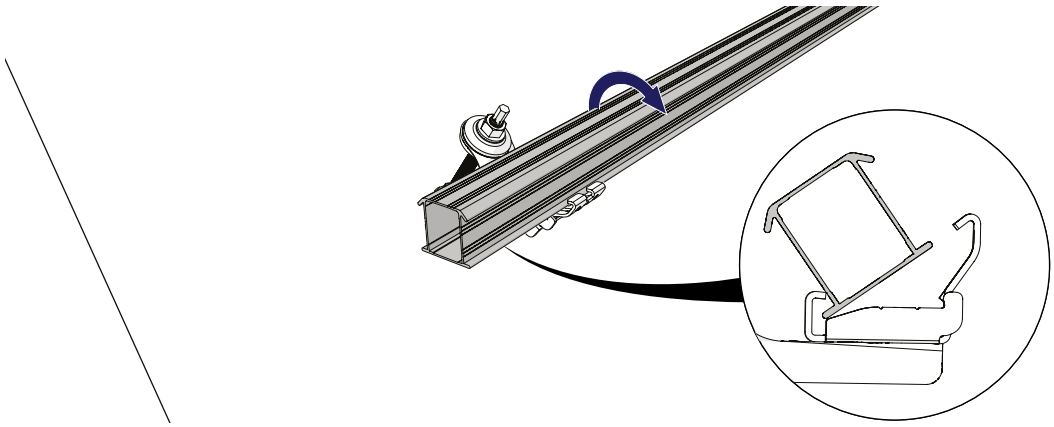

3 FOR UNEVEN ROOFS: LOOSEN THE SCREWS OF ANY MISALIGNED BRACKETS. THE RIGIDITY OF THE RAIL AUTOMATICALLY ALIGNS THE BRACKETS INTO THE CORRECT POSITION.
4 RETIGHTEN THE LOOSENED SCREWS WHEN THE RAIL IS PROPERLY ALIGNED. APPLY A TORQUE OF 9 NM.

The mounting rails need to be straight and parallel for proper installation and alignment of the solar panels.

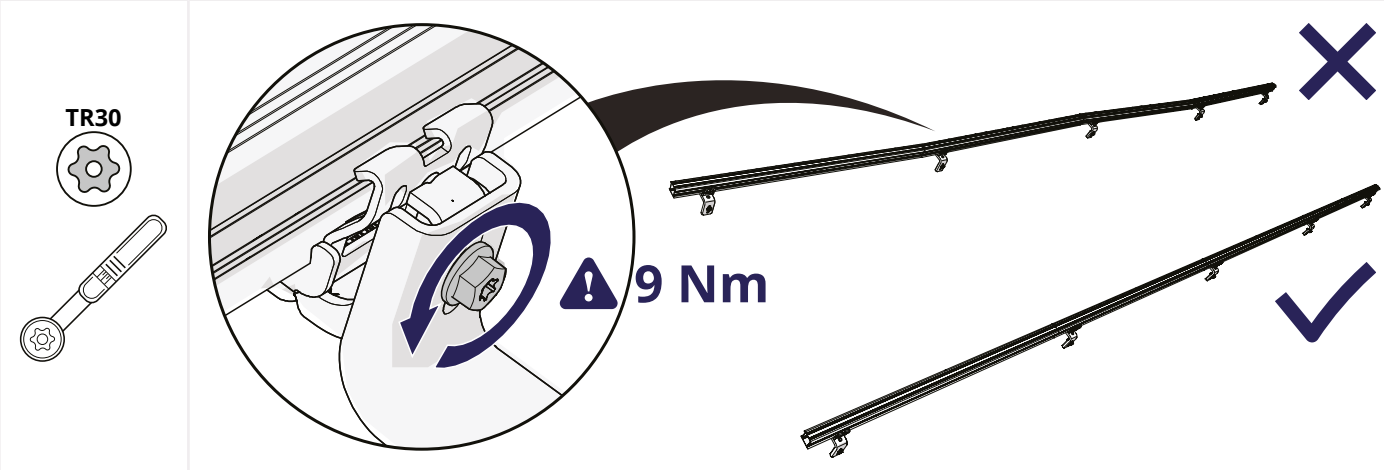

5 CLICK IN THE MOUNTING RAILS

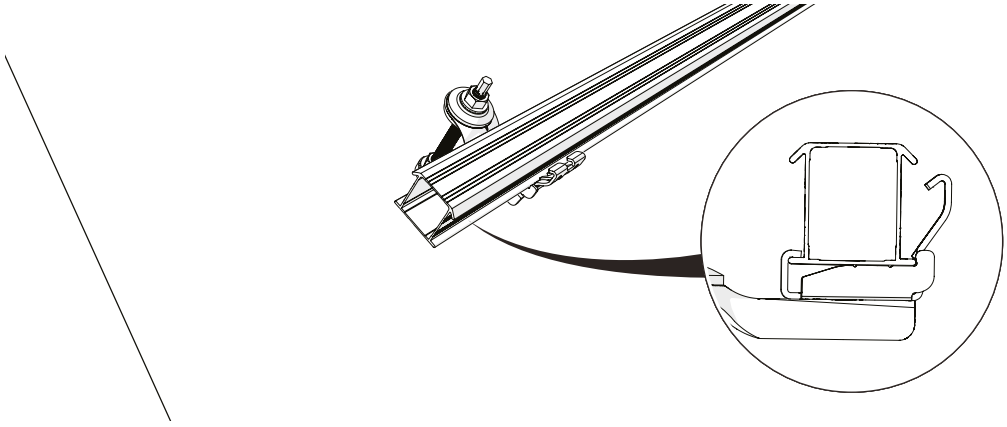

6 FOR VERTICAL MOUNTING: SECURE THE MOUNTING RAILS TO THE CLICK CONNECTIONS

First secure the bottom click connection with a self-drilling screw. Skip two click connections and then screw down the fourth click connection. Repeat until the top click connection.

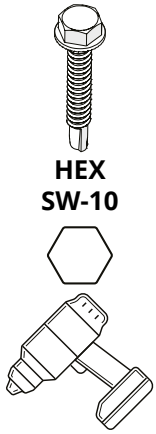

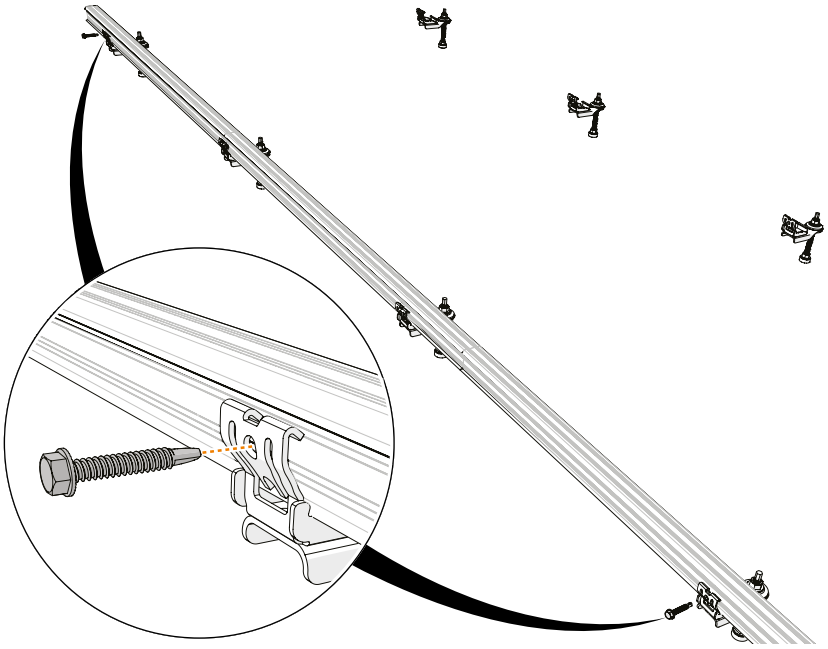

5 OPTIONAL: ATTACHING THE MLPE CLIPS

CLICKFIT EVO MLPE CLIP LIGHT WEIGHT

1 CLICK THE LIGHT WEIGHT MLPE CLIP ONTO THE RAIL
2 CLICK THE OPTIMISER ON THE LIGHT WEIGHT MLPE CLIP

Use one MLPE clip per solar panel.

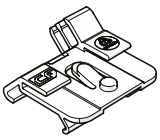

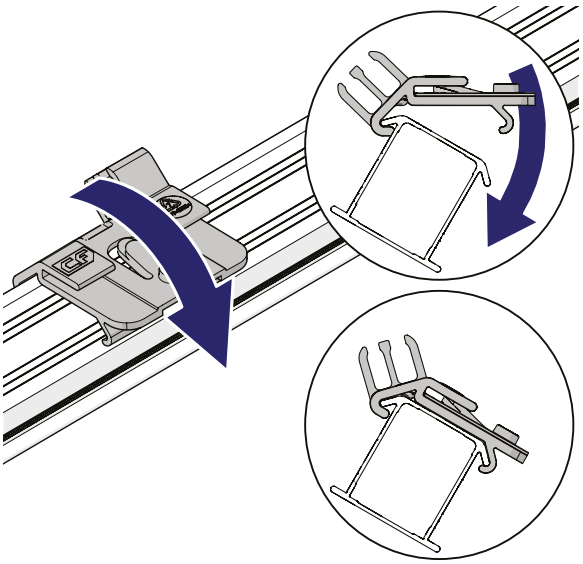

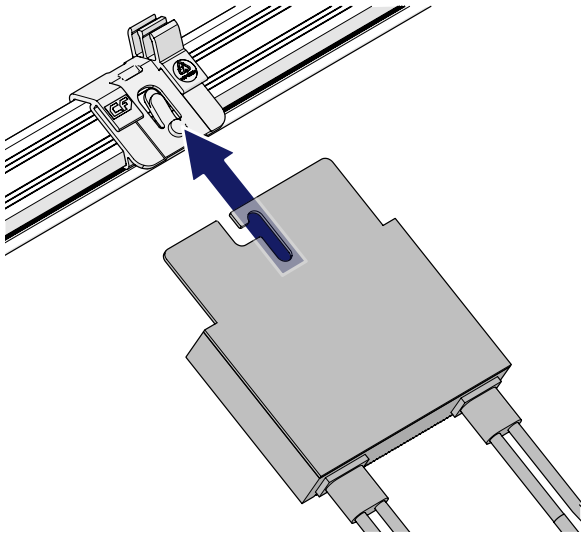

With vertical rail orientation you have to fix the MLPE clip by bending the edge of the mounting rail with adjustable pliers.

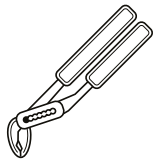

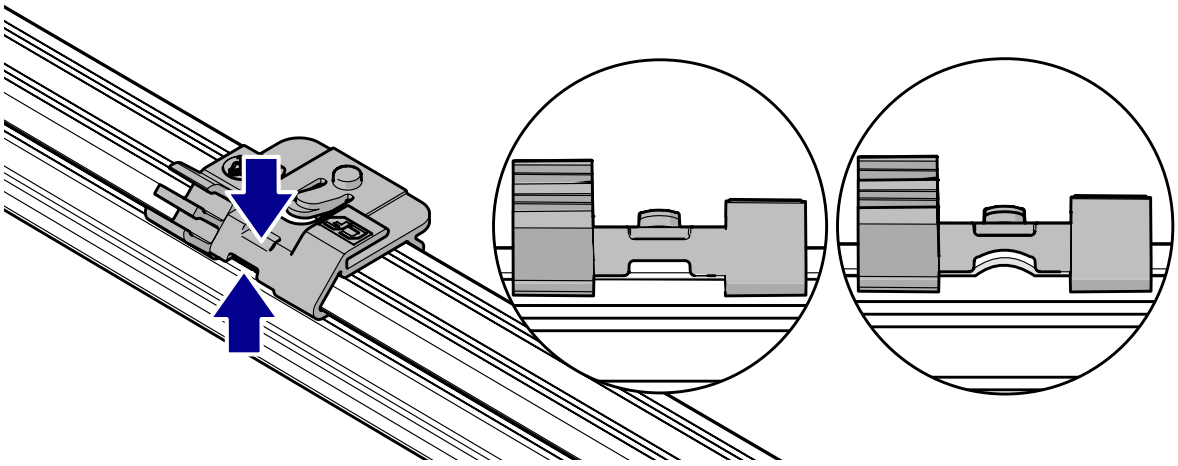

CLICKFIT EVO MLPE CLIP HEAVY WEIGHT

1 ATTACH THE OPTIMISER TO THE HEAVY WEIGHT MLPE CLIP
2 CLICK THE HEAVY WEIGHT MLPE CLIP ONTO THE RAIL

For larger optimizers (equipped with 2 slots), it is essential to use two Heavy Weight MLPE clips.

With vertical rail orientation you have to fix the cable clip by bending the edge of the mounting rail with adjustable pliers.

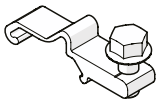

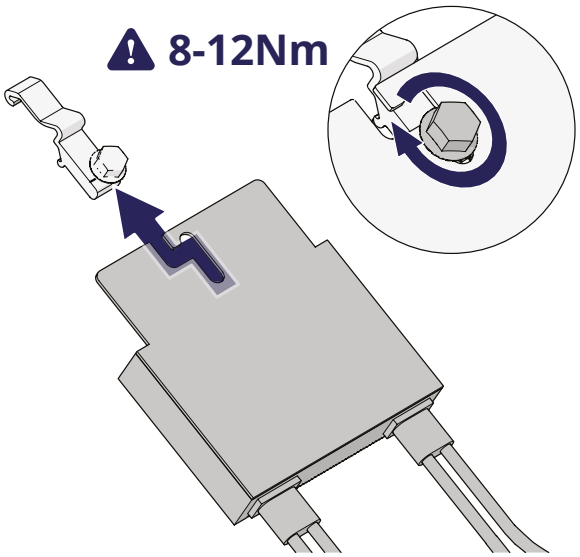

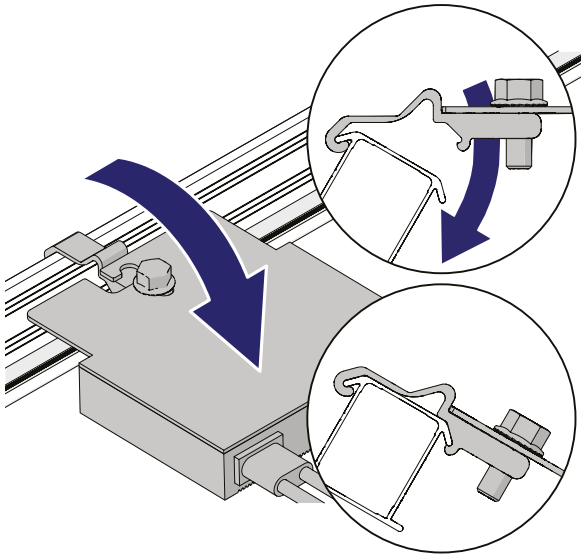

MOUNTING SOLAR PANELS WITH 60MM PANEL CLAMPS

1 MOUNTING THE FIRST PANEL

1 OPTIONAL: CLICK THE AUXILIARY SET ON THE PANEL.

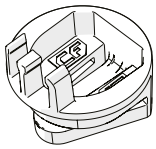

2×

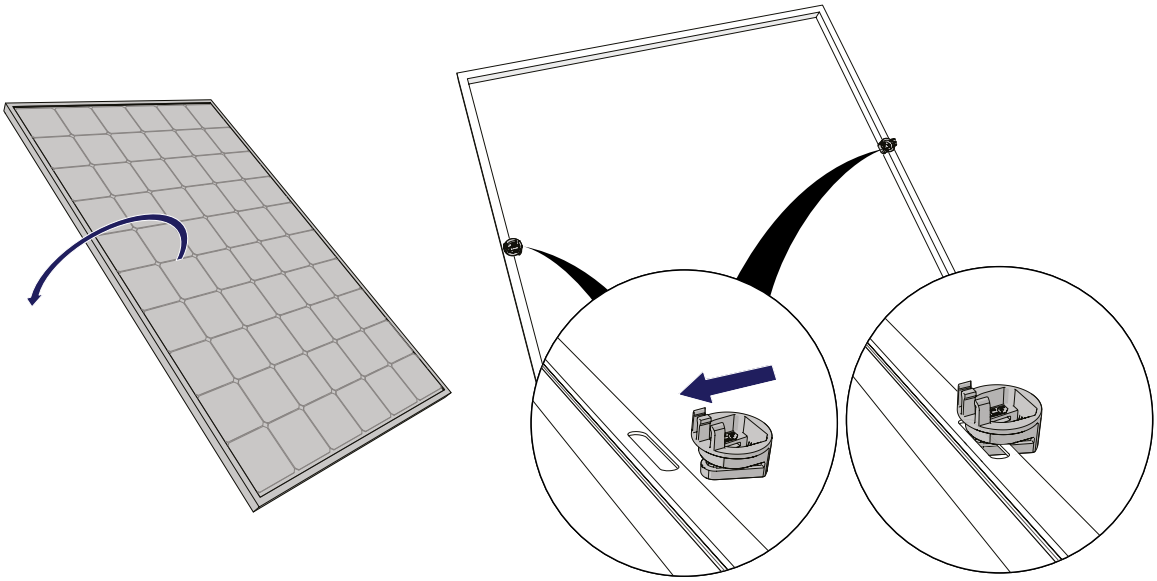

2 OPTIONAL: CLICK THE CABLES OF THE PANEL FIRMLY INTO THE CABLE CLAMP.

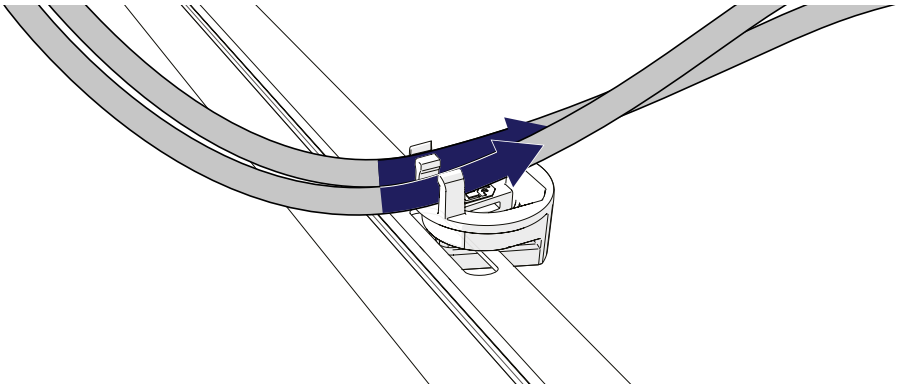

3 SLIDE THE END CAPS ONTO THE RAILS.

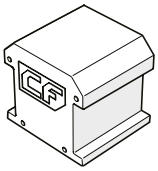

2×

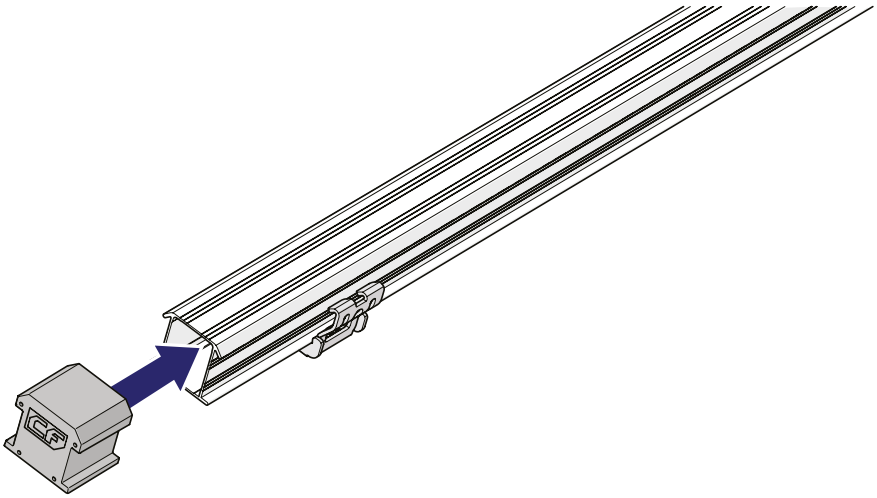

4 CLICK THE CLICKFIT EVO 60 END CLAMPS ON THE RAILS.

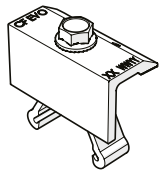

2×

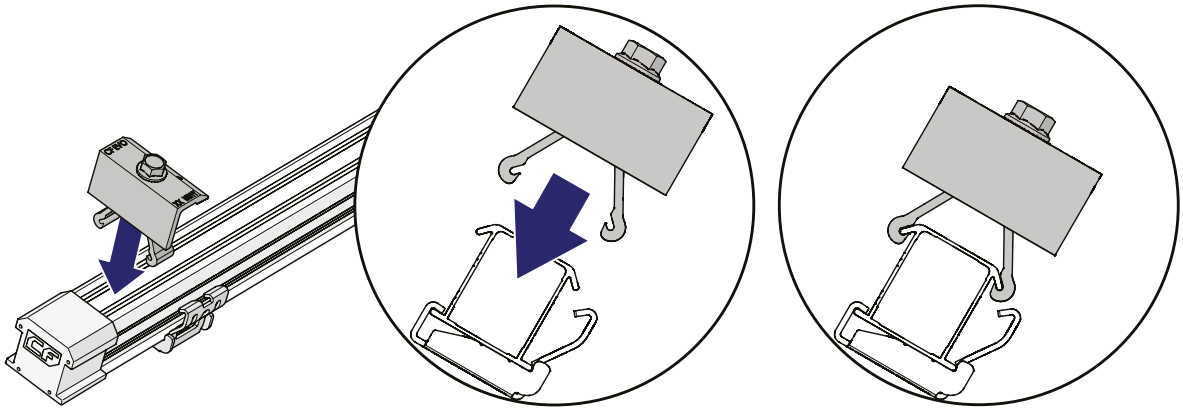

5 OPTIONAL: GUIDE THE CABLES OF THE SOLAR PANEL THROUGH THE CLICK CONNECTIONS.

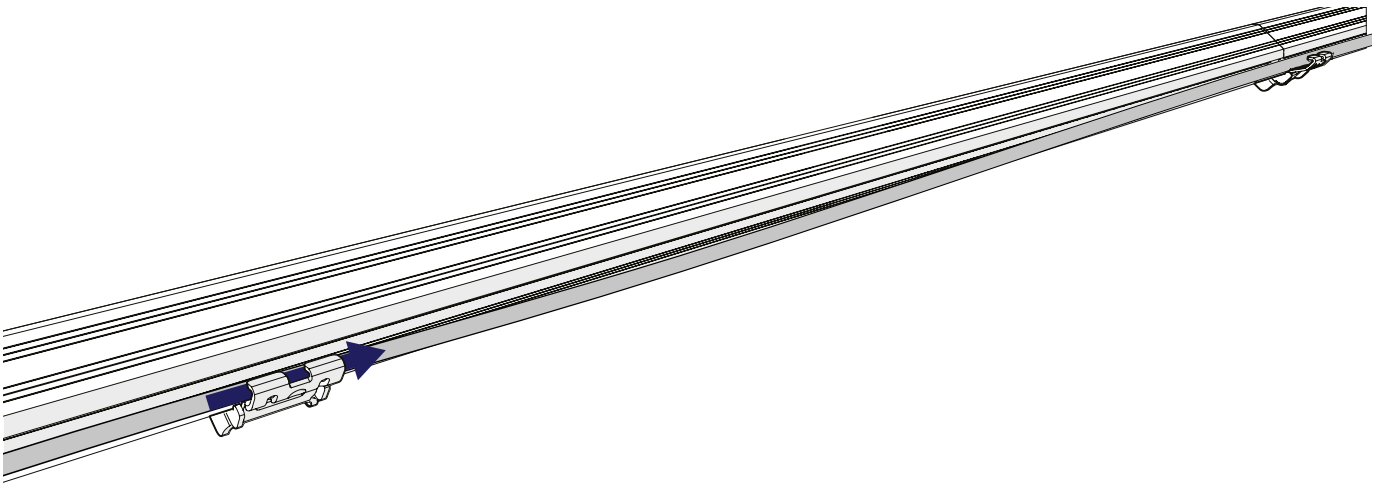

6 PLACE THE PANEL ON THE RAILS AND SLIDE THE PANEL AGAINST THE CLAMPS.

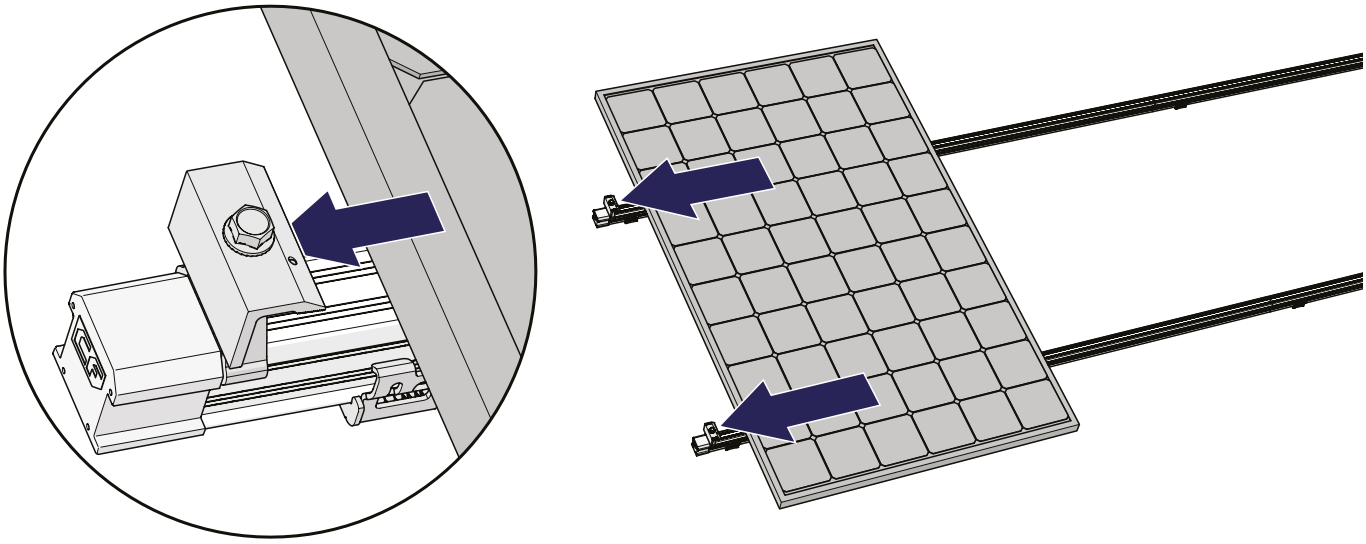

7 FASTEN THE SCREW OF THE END CLAMPS TO SECURE THE PANEL. APPLY A TORQUE OF 16.5 NM.

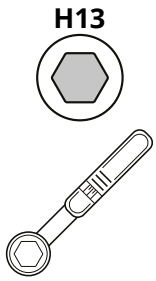

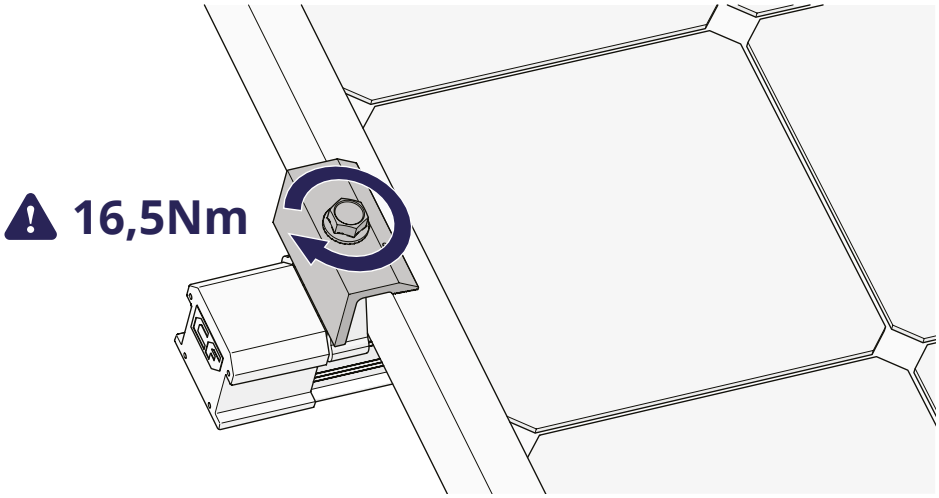

2 MOUNTING THE FOLLOWING PANELS

1 CLICK THE 60MM MID CLAMPS ON THE RAILS.

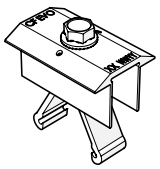

2×

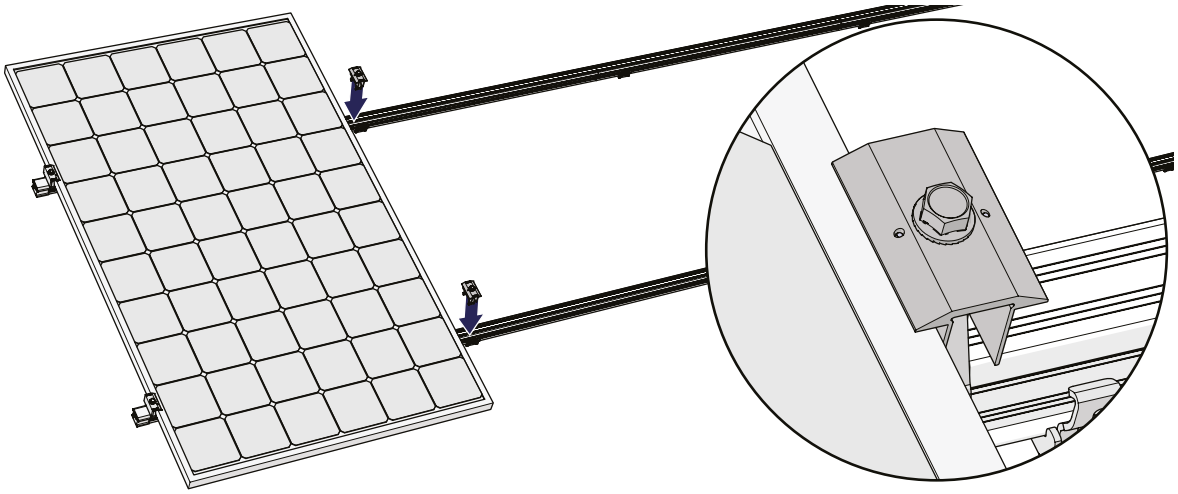

Optional: Repeat steps 1.1. and 1.2.: Click the Auxiliary set on the panel and Click the cables of the panel firmly into the cable clamp.

2 PLACE THE NEXT PANEL ON THE RAILS AND SLIDE THE PANEL AGAINST THE CLAMPS.

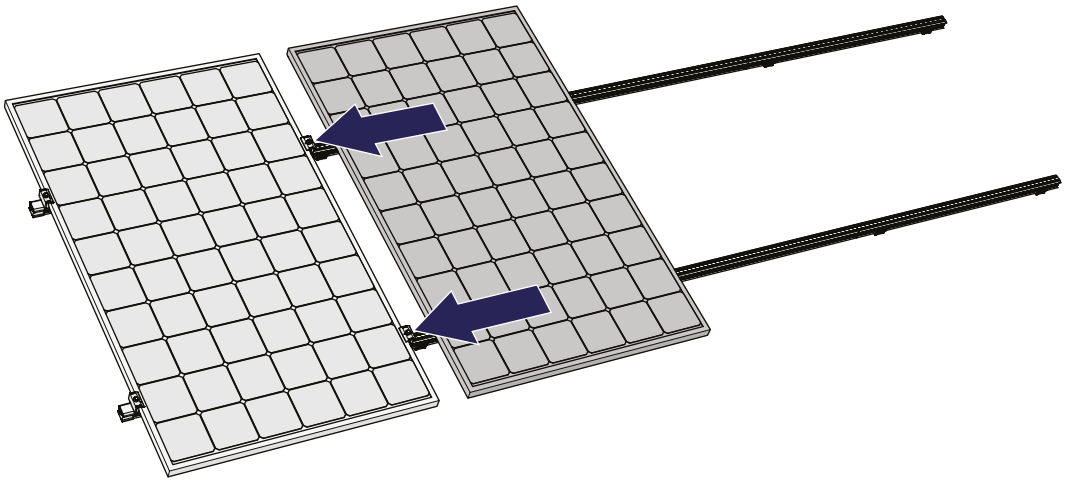

3 FASTEN THE SCREW OF THE MID CLAMPS TO SECURE THE PANEL. APPLY A TORQUE OF 16.5 NM.

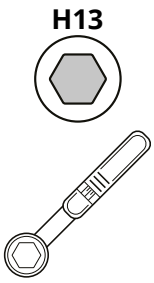

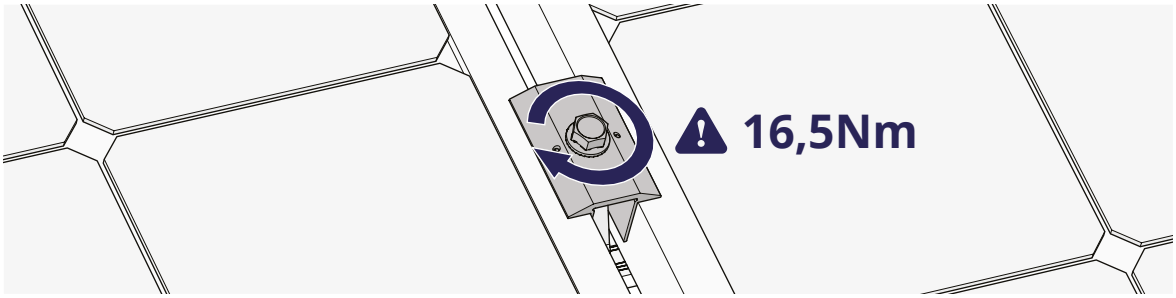

Repeat the steps in this chapter for all panels of the row.

3 MOUNTING THE LAST PANEL

Optional: Repeat steps 1.1. and 1.2.: Click the Auxiliary set on the panel and click the cables of the panel firmly into the cable clamp.

1 CLICK THE CLICKFIT EVO 60 END CLAMPS ON THE RAILS.
2 FASTEN THE SCREW OF THE END CLAMPS TO SECURE THE PANEL. APPLY A TORQUE OF 16.5 NM.

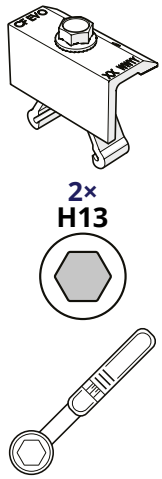

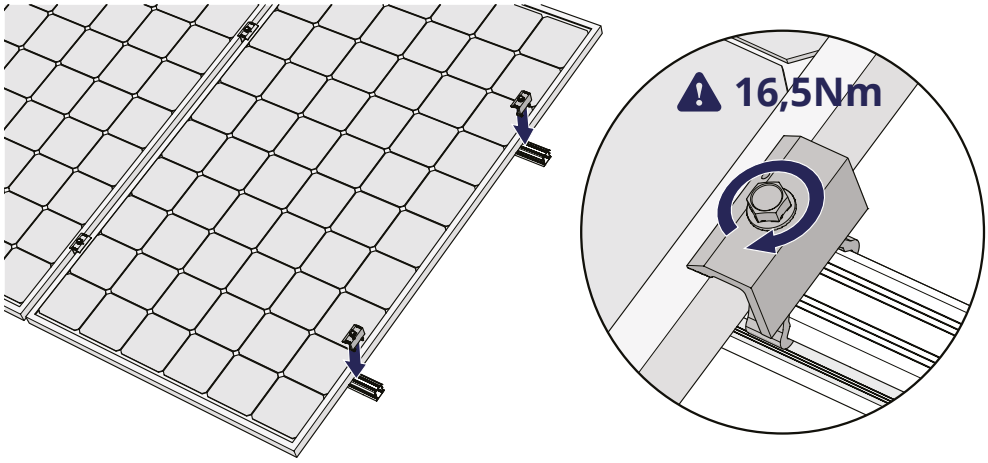

3 SLIDE THE END CAPS ONTO THE RAILS.

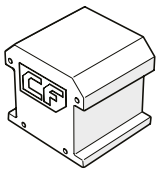

2×

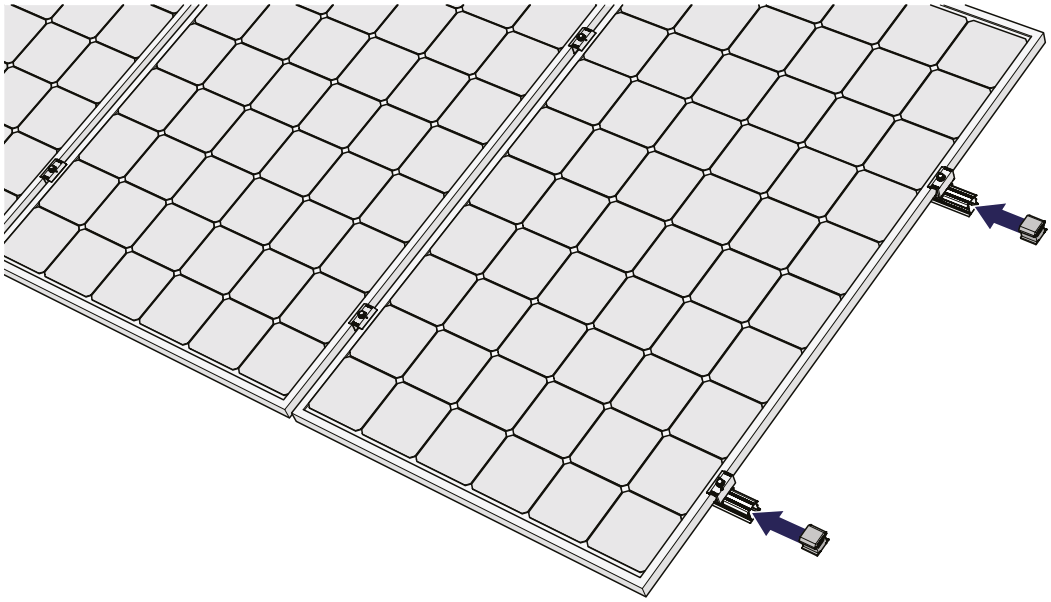

MOUNTING THE SOLAR PANELS WITH 35 MM PANEL CLAMPS

1 MOUNTING THE FIRST PANEL

1 OPTIONAL: CLICK THE AUXILIARY SET ON THE PANEL.

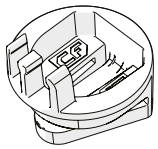

2×

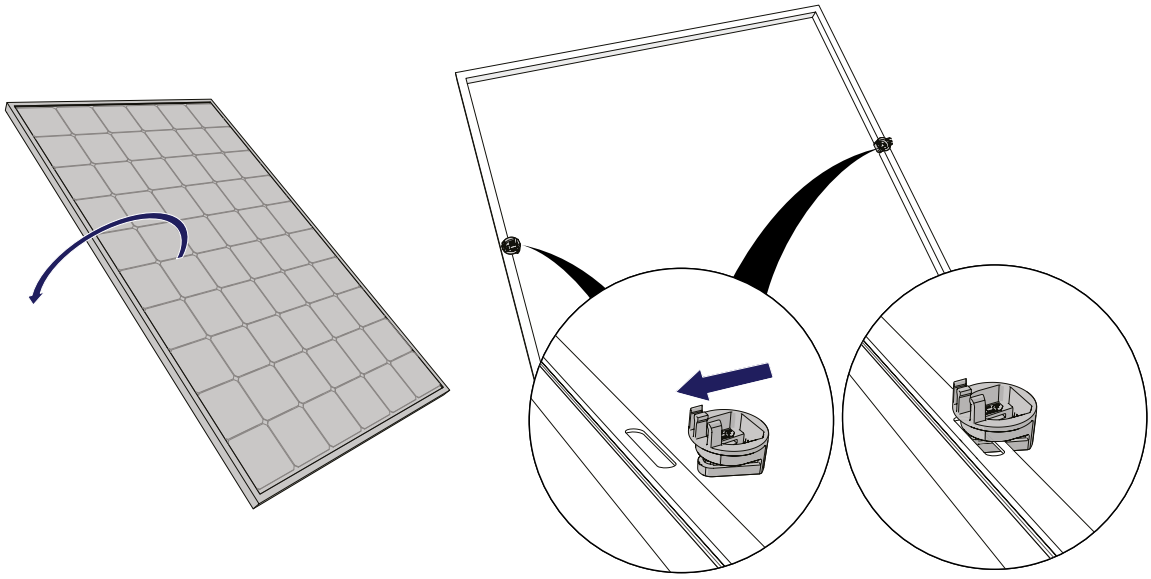

2 OPTIONAL: CLICK THE CABLES OF THE PANEL FIRMLY INTO THE CABLE CLAMP.

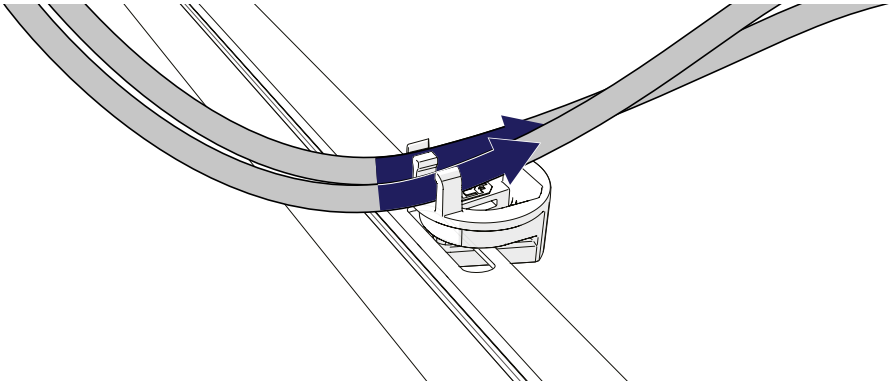

3 CLICK THE UNIVERSAL MODULE CLAMP ON THE RAILS.

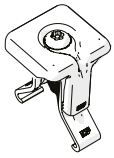

2×

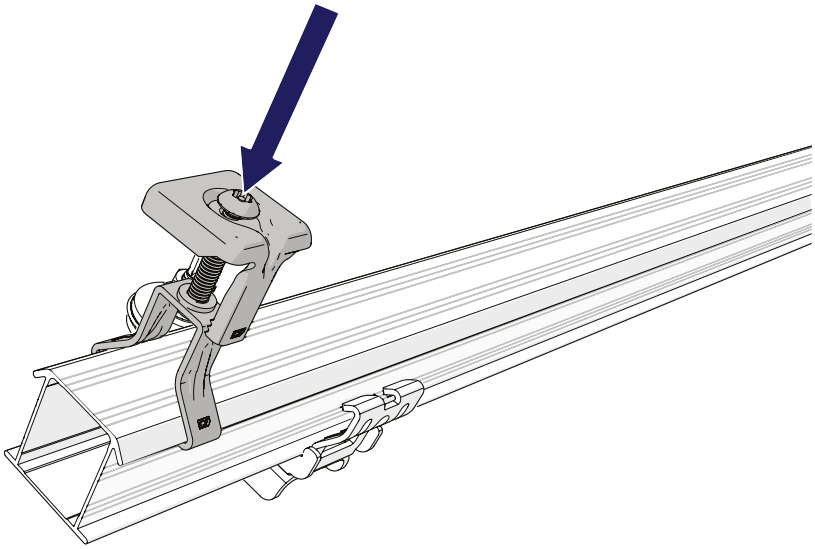

4 SLIDE THE END CAPS ONTO THE RAILS.

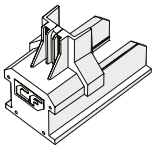

2×

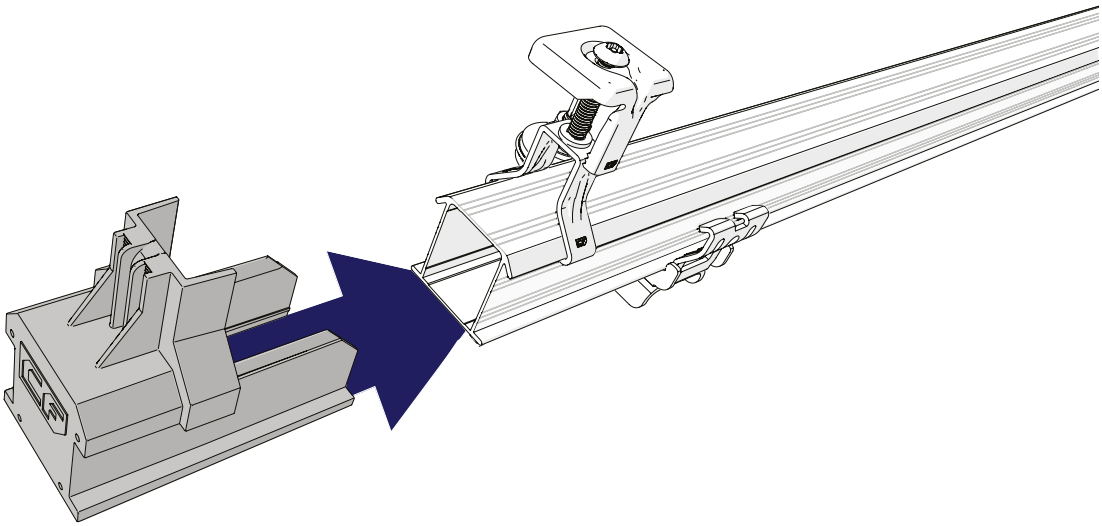

5 ROTATE THE UPPER PART OF THE MODULE CLAMP OVER THE END CAP.

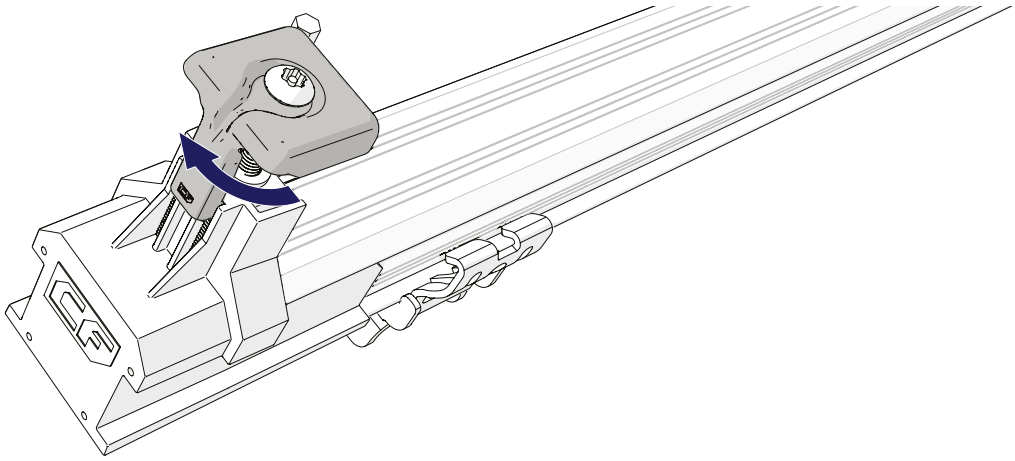

6 OPTIONAL: GUIDE THE CABLES OF THE SOLAR PANEL THROUGH THE CLICK CONNECTIONS.

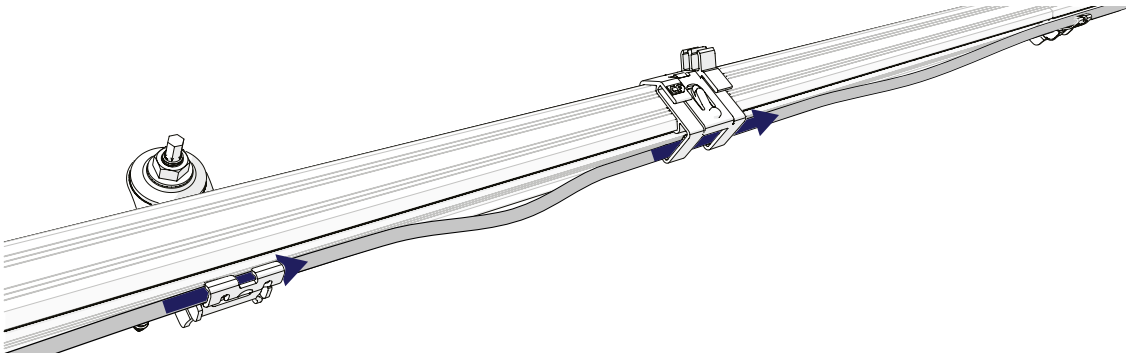

7 PLACE THE PANEL ON THE RAILS.

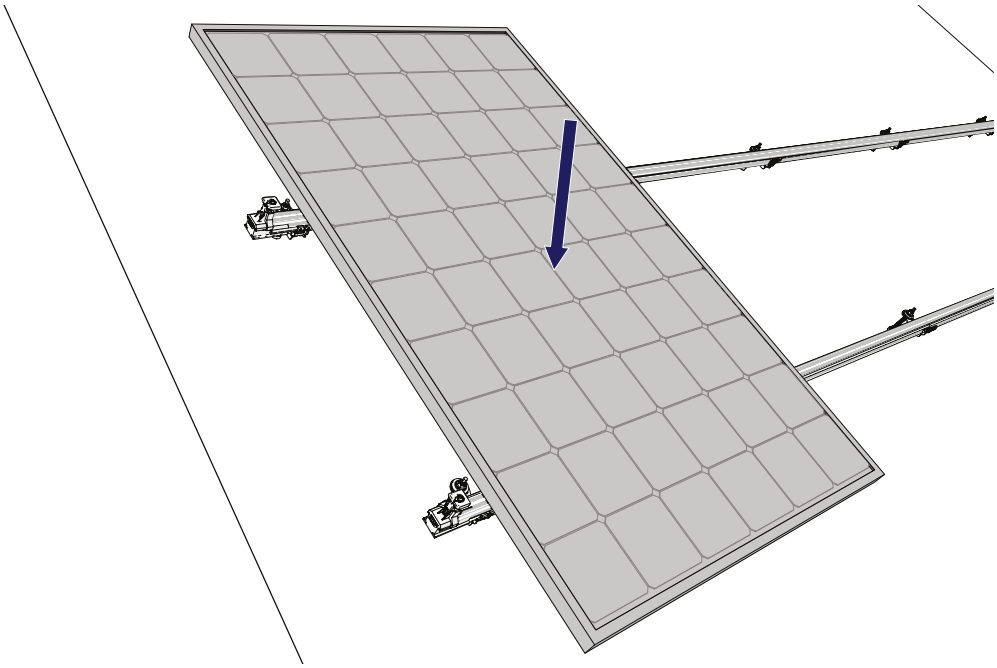

8 SLIDE THE PANEL AGAINST THE CLAMPS.

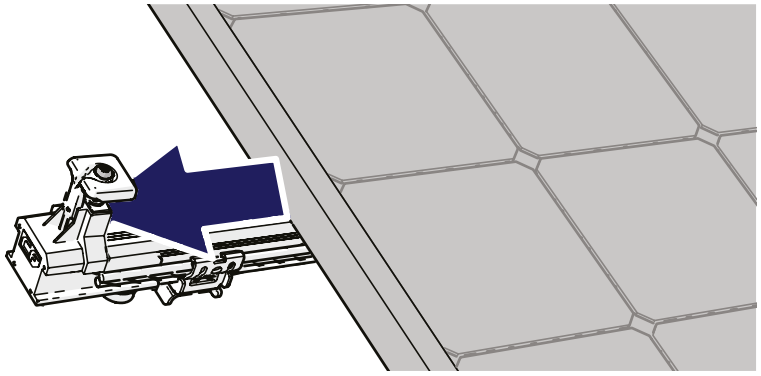

9 SCREW THE CLAMPS ONTO THE PANEL. APPLY A TORQUE OF 4.5 NM.

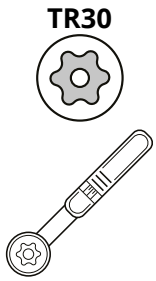

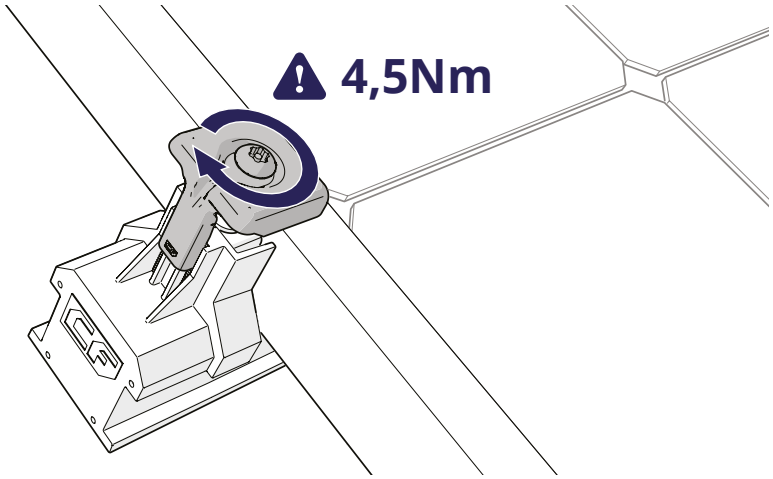

2 MOUNTING THE FOLLOWING PANELS

1 CLICK THE UNIVERSAL MODULE CLAMP ON THE RAILS.

Install the module clamp with the drainage channel of the module clamp pointing downwards.

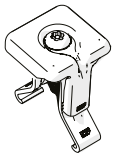

2×

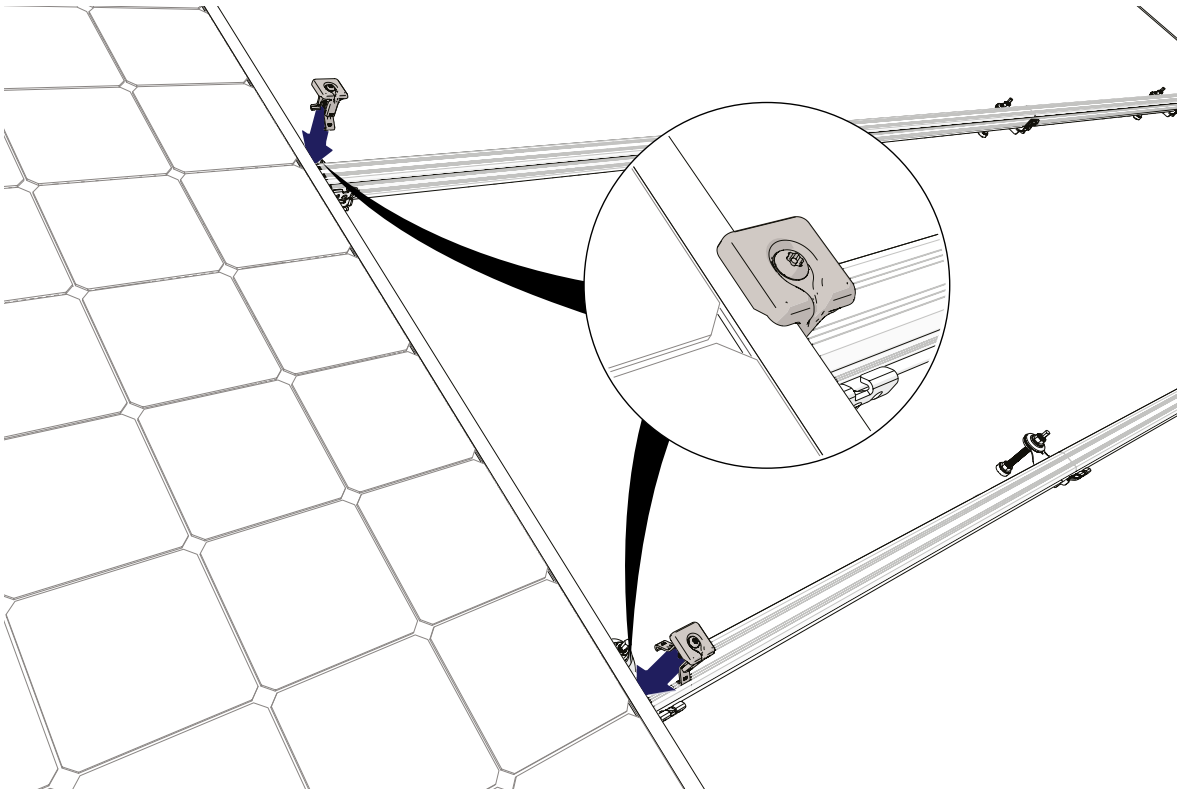

☐	Optional: Repeat steps 1.1. and 1.2.: Click the Auxiliary set on the panel and Click the cables of the panel firmly into the cable clamp.
☐	Repeat step 1.7. Place the panel on the rails.

2 SLIDE THE PANEL AGAINST THE CLAMPS.

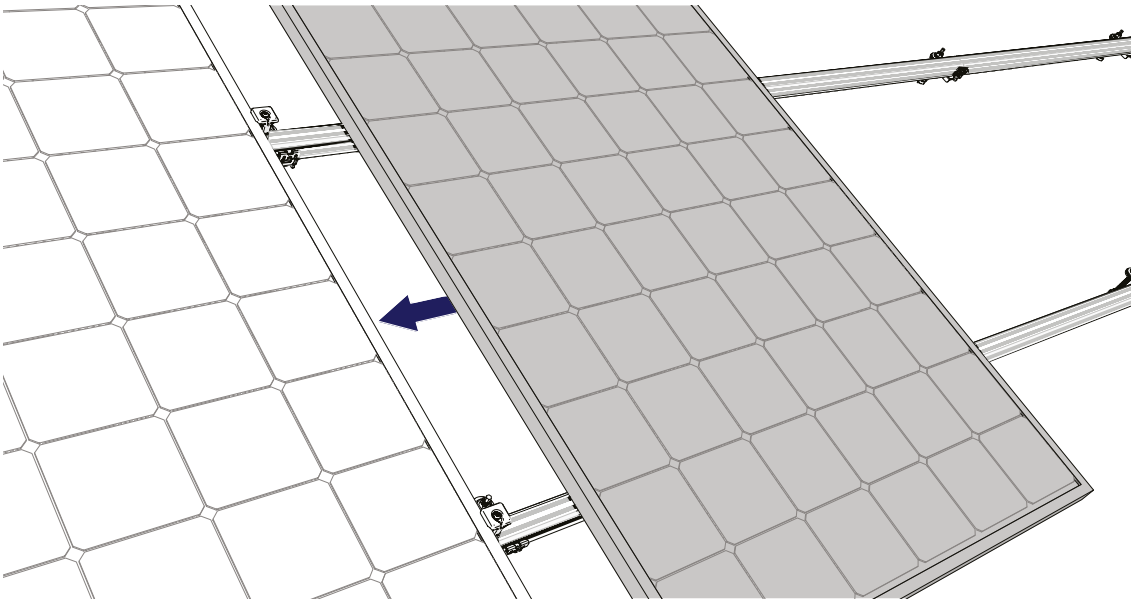

3 SCREW THE CLAMPS ONTO THE PANEL. APPLY A TORQUE OF 4.5 NM.

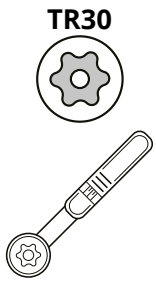

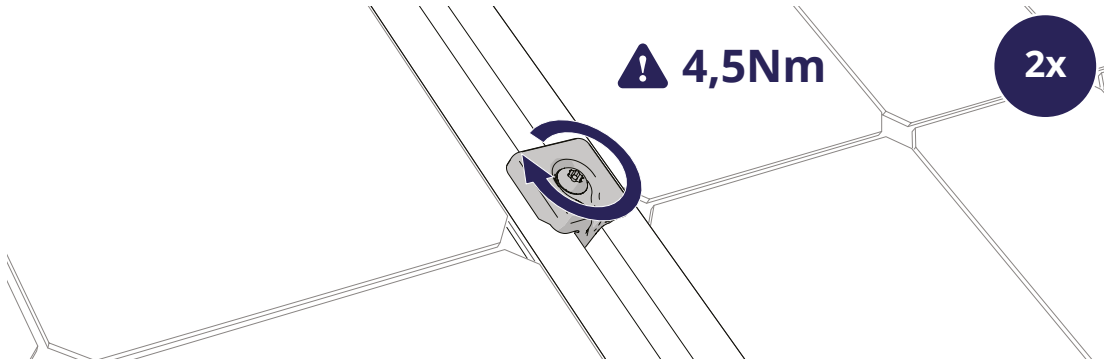

☐	Repeat the steps in this chapter for all panels of the row.

3 MOUNTING THE LAST PANEL

☐	Optional: Repeat steps 1.1. and 2.: Click the Auxiliary set on the panel and Click the cables of the panel firmly into the cable clamp.
☐	Repeat step 2.7. Place the panel on the rails.
☐	Repeat step 2.2. Slide the panel against the clamps.

1 OPTIONAL: SAW THE MOUNTING RAILS TO SIZE

- If the overhang is smaller than 250 mm, keep a minimum of 20 mm to a maximum of 35 mm rail length overhang for mounting the end cap (art. no.1008060(-B)).
- Does the outer panel edge project more than 250mm beyond the last hanger bolt? Then extend the mounting rail so it goes 50mm beyond the next hanger bolt and attach the mounting rail here. This extra 50mm provides sufficient length to fit an end cap (article no. 1008066(-B)) to the mounting rails. For the end clamp you must then use the end clamp support (article no. 1008065(-B)).

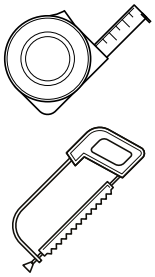

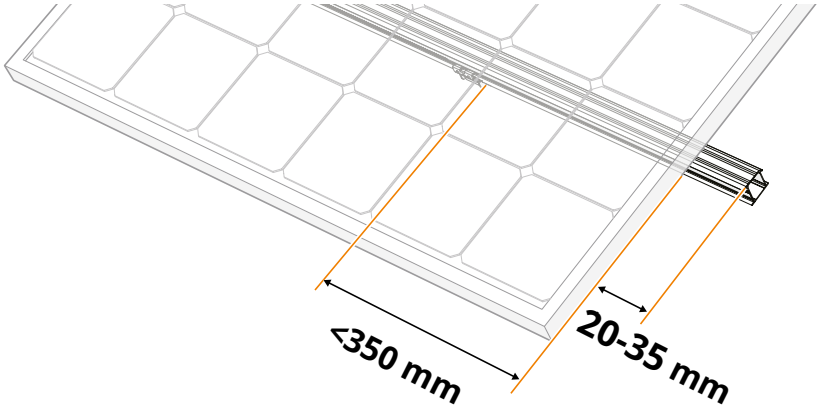

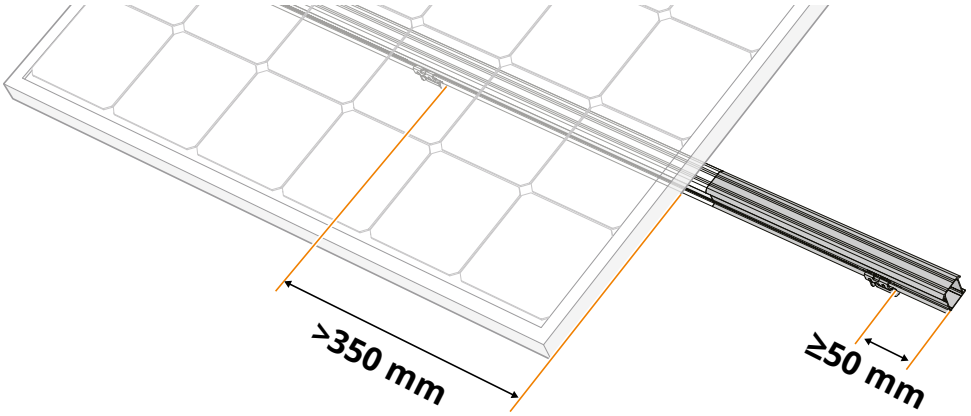

2 CLICK THE UNIVERSAL MODULE CLAMP ON THE RAILS.

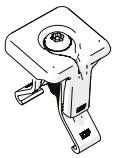

2×

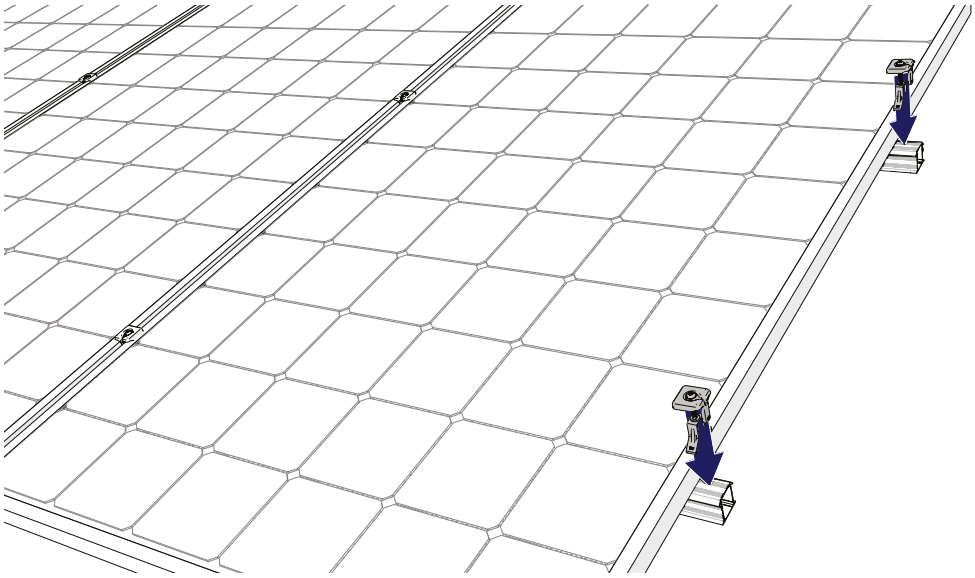

3 SLIDE THE END CAPS ONTO THE RAILS.

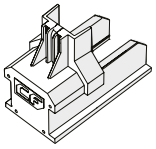

2×

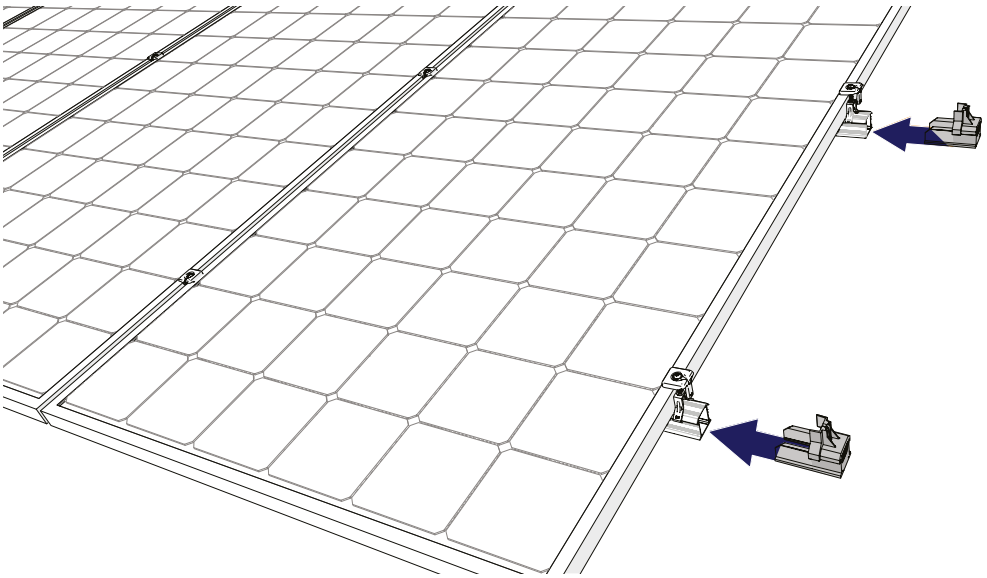

4 ROTATE THE UPPER PART OF THE MODULE CLAMP OVER THE END CAP.

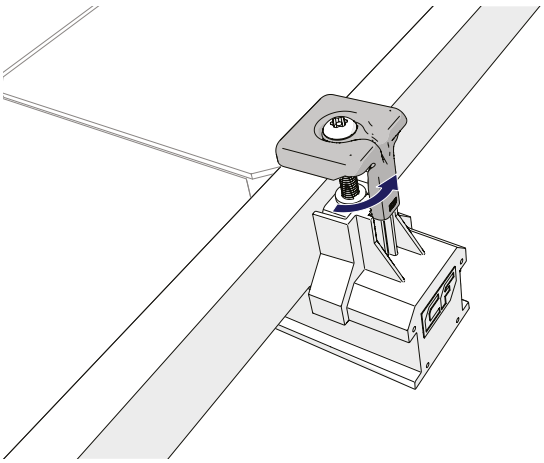

5 SCREW THE CLAMPS ONTO THE PANEL. APPLY A TORQUE OF 4.5 NM.

TR30

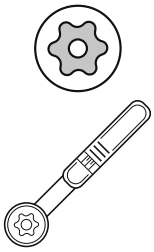

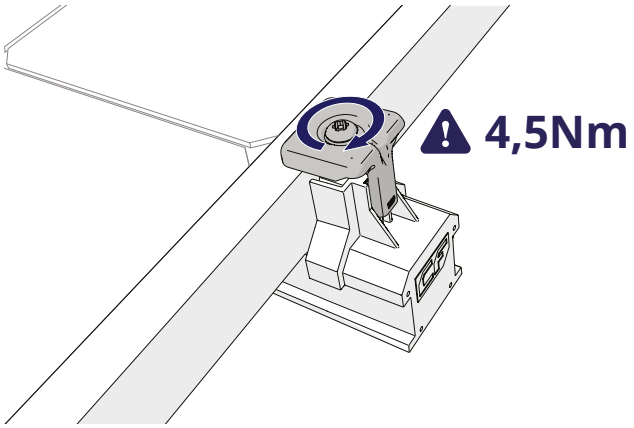

4 MOUNTING MULTIPLE ROWS

1 MOUNT EACH NEXT ROW AGAINST THE PREVIOUS ROW

- Always keep a minimum of 12 mm between each row of panels in the case of horizontal rails, or each panel column in the case of vertical rails.
- Always follow the project plan from the calculator.

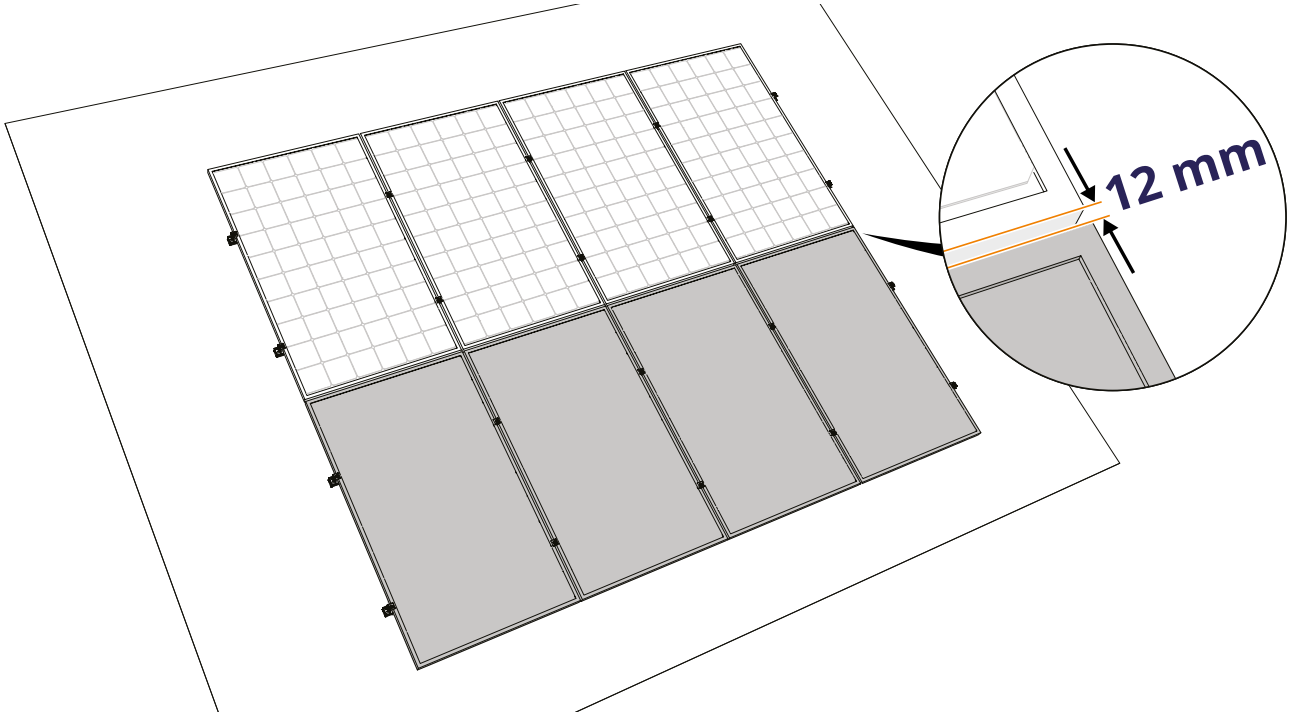

REMOVAL AND RECYCLING

GENERAL

Always follow local laws and regulations when dismantling the mounting system and disposing of it.

BUILDING VALUE FOR SOLAR PROFESSIONALS

Esdec
Londenstraat 16
7418 EE Deventer
The Netherlands

+31 850 702 000
info@esdec.com

260924