Hi-MO X6 Max Explorer

LR7-60HTH

505~515M

- Suitable for Distribution Market
- Simple design embodies modern style
- Better energy generation performance
- High-quality module guarantees long-term reliability

15 15-year Warranty for Materials and Processing

25 25-year Warranty for Extra Linear Power Output



Complete System and Product Certifications

IEC 61215, IEC 61730

ISO9001:2015: ISO Quality Management System

ISO14001: 2015: ISO Environment Management System

ISO45001: 2018: Occupational Health and Safety

IEC62941: Guideline for module design qualification and type approval

LONGi

Hi-MO X6 Max Explorer

LR7-60HTH 505~515M

22.8%	0~3%	<1%	0.40%
MAX MODULE EFFICIENCY	POWER TOLERANCE	FIRST YEAR POWER DEGRADATION	YEAR 2-25 POWER DEGRADATION

Additional Value

25-Year Power Warranty

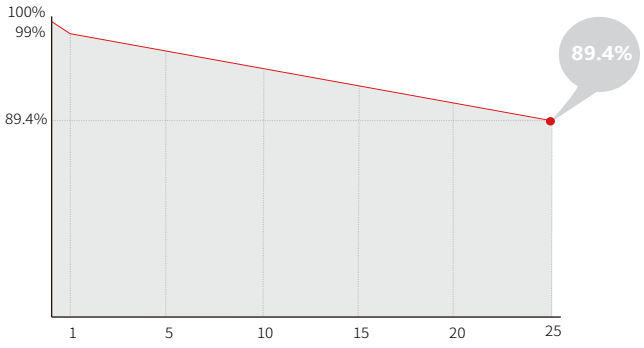

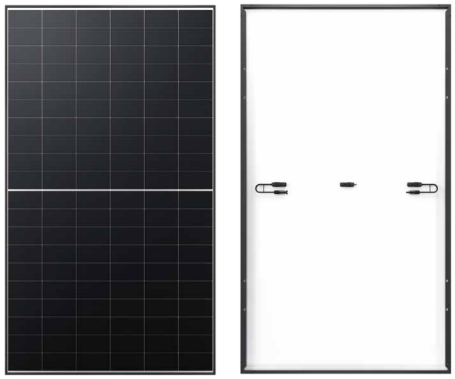

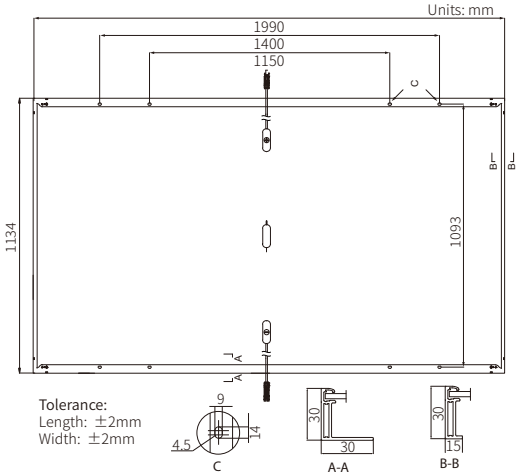

Mechanical Parameters

Cell Orientation	120 (6×20)
Junction Box	IP68
Output Cable	4mm², ±1400mm length can be customized
Glass	Single glass, 3.2mm coated tempered glass
Frame	Anodized aluminum alloy frame
Weight	24.8kg
Dimension	1990×1134×30mm
Packaging	36pcs per pallet / 180pcs per 20' GP / 792pcs per 40' HC

Electrical Characteristics

STC : AM1.5 1000W/m² 25°C NOCT : AM1.5 800W/m² 20°C 1m/s Test uncertainty for Pmax: ±3%

Module Type	LR7-60HTH-505M		LR7-60HTH-510M		LR7-60HTH-515M	
Testing Condition	STC	NOCT	STC	NOCT	STC	NOCT
Maximum Power (Pmax/W)	505	377.3	510	381.2	515	384.9
Open Circuit Voltage (Voc/V)	43.50	40.84	43.70	41.03	43.90	41.22
Short Circuit Current (Isc/A)	14.77	11.92	14.84	11.98	14.89	12.02
Voltage at Maximum Power (Vmp/V)	36.64	33.44	36.84	33.62	37.04	33.80
Current at Maximum Power (Imp/A)	13.79	11.28	13.85	11.34	13.91	11.39
Module Efficiency(%)	22.4%		22.6%		22.8%	

Operating Parameters

Operational Temperature	-40°C ~ +85°C
Power Output Tolerance	0 ~ 3%
Maximum System Voltage	DC1500V (IEC)
Maximum Series Fuse Rating	25A
Nominal Operating Cell Temperature	45±2°C
Protection Class	Class II
Fire Rating	IEC Class C

Mechanical Loading

Front Side Maximum Static Loading	5400Pa
Rear Side Maximum Static Loading	2400Pa
Hailstone Test	25mm Hailstone at the speed of 23m/s

Temperature Ratings (STC)

Temperature Coefficient of Isc	+0.050%/°C
Temperature Coefficient of Voc	-0.230%/°C
Temperature Coefficient of Pmax	-0.280%/°C

LONGi

Specifications included in this datasheet are subject to change without notice. LONGi reserves the right of final interpretation. (20240820 V2) DG