Connecting Strength

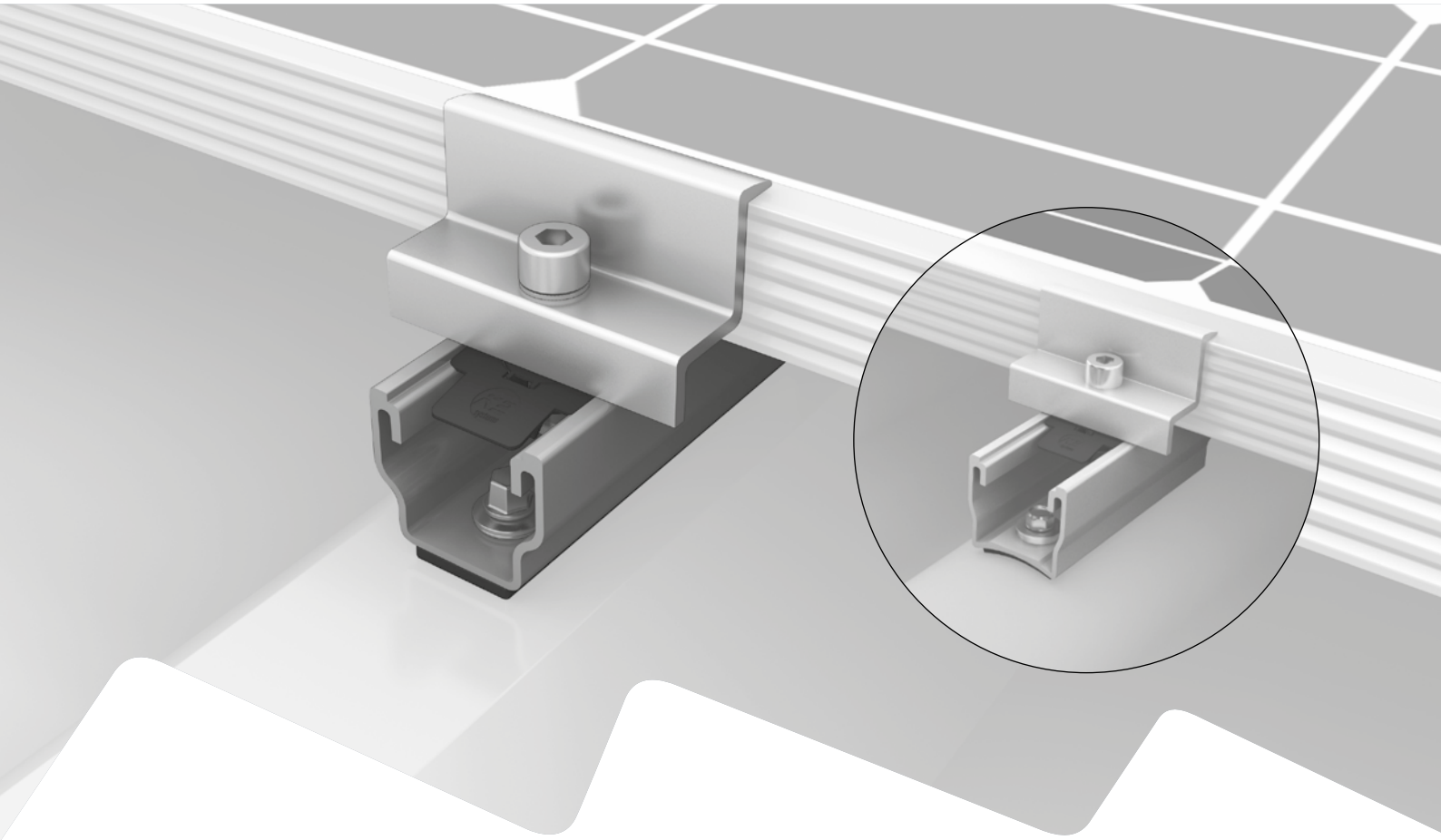

Assembly instructions

MultiRail System

Content

- **Tools overview** **3**
- **General safety information** **4**
- **The following guidelines apply** **5**
  - Planning with K2 Base 5
  - Roof requirements 5
  - Structural requirements 5
  - Important mounting instructions 5
- **Components** **6**
  - Trapezoidal sheet metal 6
  - Corrugated sheet metal 8
- **Assembly** **10**
  - Trapezoidal sheet metal 10
  - Corrugated sheet metal 15
- **Optional assembly steps** **20**
  - Module frame grounding 20
  - Roof-parallel elevation with RailUp 21
- **Notes** **22**

Quality tested - several certifications

K2 Systems stands for secure connections, highest quality and precision. Our customers and business partners have known that for a long time. Independent institutes have tested, confirmed and certified our capabilities and components.

Please find our quality and product certificates under:
k2-systems.com/en/technical-information

Tools overview

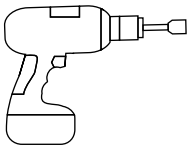

6 mm

8 mm

≥ 100 mm

6 - 35 Nm
(4.5 - 22.2 lb-ft)

6 mm

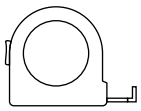

≥ 3.0 m

≥ 6.0 m

General safety information

Please note that our general mounting instructions must be followed at all times and can be viewed online at k2-systems.com

- The equipment may only be installed and operated by qualified and adequately trained installers.
- Prior to installation, ensure that the product complies with on-site static loading requirements.
  For roof-mounted systems, the roof load-bearing capacity must always be checked.
- National and local building regulations and environmental requirements must be adhered to.
- Compliance with health and safety regulations, accident prevention guidelines and applicable standards is required.
  - Protective equipment such as safety helmet, boots and gloves must be worn.
  - Roofing works must be in accordance with roofing regulations utilising fall protection safeguards when eaves height exceeds 3 m.
  - At least two people must be present for the duration of the installation work in order to provide rapid assistance in the event of an emergency.
- K2 mounting systems are continuously developed and improved and the installation process may thereby change at any time. Prior to installation consult our website at www.k2-systems.com/en/technical-information for up-to-date instructions. We can send you the latest version on request.
- The assembly instructions of the module manufacturer must be adhered to.
- Equipotential bonding/grounding/earthing between individual parts is to be performed according to country specific standards, as well as national laws and regulations.
- At least one copy of the assembly instructions should be available on site throughout the duration of the installation.
- Failure to adhere to our general safety and assembly instructions and not using all system components, K2 is not liable for any resulting defects or damages. We do not accept liability for any damage resulting in the use of competitor's parts. Warranty is excluded in such cases.
- K2 Systems GmbH reserves the right to exclude liability if our general safety instructions are disregarded or if components of the competition are installed or attached.
- If all safety instructions are adhered to and the system is correctly installed, there is a product warranty entitlement of 12 years! We strongly recommend reviewing our terms of guarantee, which can be viewed at k2-systems.com/en/warranty-terms-and-conditions
  We will also send this information on request.
- Dismantling of the system is performed in reverse order to the assembly.
- K2 stainless steel components are available in different corrosion resistance classes. Each structure or component must be carefully checked for possible corrosion exposure.

The following guidelines apply

This system can be installed as standard under the following conditions. Even if the system is capable of meeting higher demands through the integration of safety standards, please get in touch with your contact at K2 Systems if the specified values are exceeded.

Planning with K2 Base

We recommend our free online software K2 Base for the planning. In five steps, you can plan the right assembly system and get a construction recommendation, parts list and the structural analysis report. Simply register and start planning:
base.k2-systems.com

Roof requirements

- The sufficient holding force of the roof covering at the support or substructure must be ensured on site.
- Roof pitch: 5 - 75°
- Thickness trapezoidal sheet metal: ≥ 0.4 mm steel or ≥ 0.5 mm aluminium
- Sheet quality steel at least S235 acc. DIN EN 10025-1
- Minimum tensile strength for aluminium 165 N/mm²
- High crest width ≥ 22 mm, flush area surrounding the bore hole: ≥ 20 mm
- High bead radius for corrugated sheet metal: r = 22 - 45 mm

Structural requirements

The static verification of the component is automatically calculated with the K2 Base planning software for the respective location. The design provided in a project report must be followed.

Important mounting instructions

- On-site general standards and regulations for lightning protection must be observed and consultation with a specialist to create a lightning protection concept is recommended (use lightning protection clamp if necessary). Country-specific regulations must be observed.
- After 13.60 m (length of the module row in the vertical crest direction) a thermal separation must be installed.
  For this purpose, two rails must be fixed one behind the other on the same high crest. The distance between the MultiRails must be at least 30 mm.
- If the trapezoidal sheet is fastened with storm washers, please do not fasten the MultiRails on the storm washers! Spacing must be measured beforehand.
- Fasten the MultiRails to corrugated or trapezoidal sheet metal with thin sheet metal screws approved by the building authorities.
- Horizontal distance (verge-to-verge direction) between the short sides of the modules must be at least 5 mm

Components

Trapezoidal sheet metal

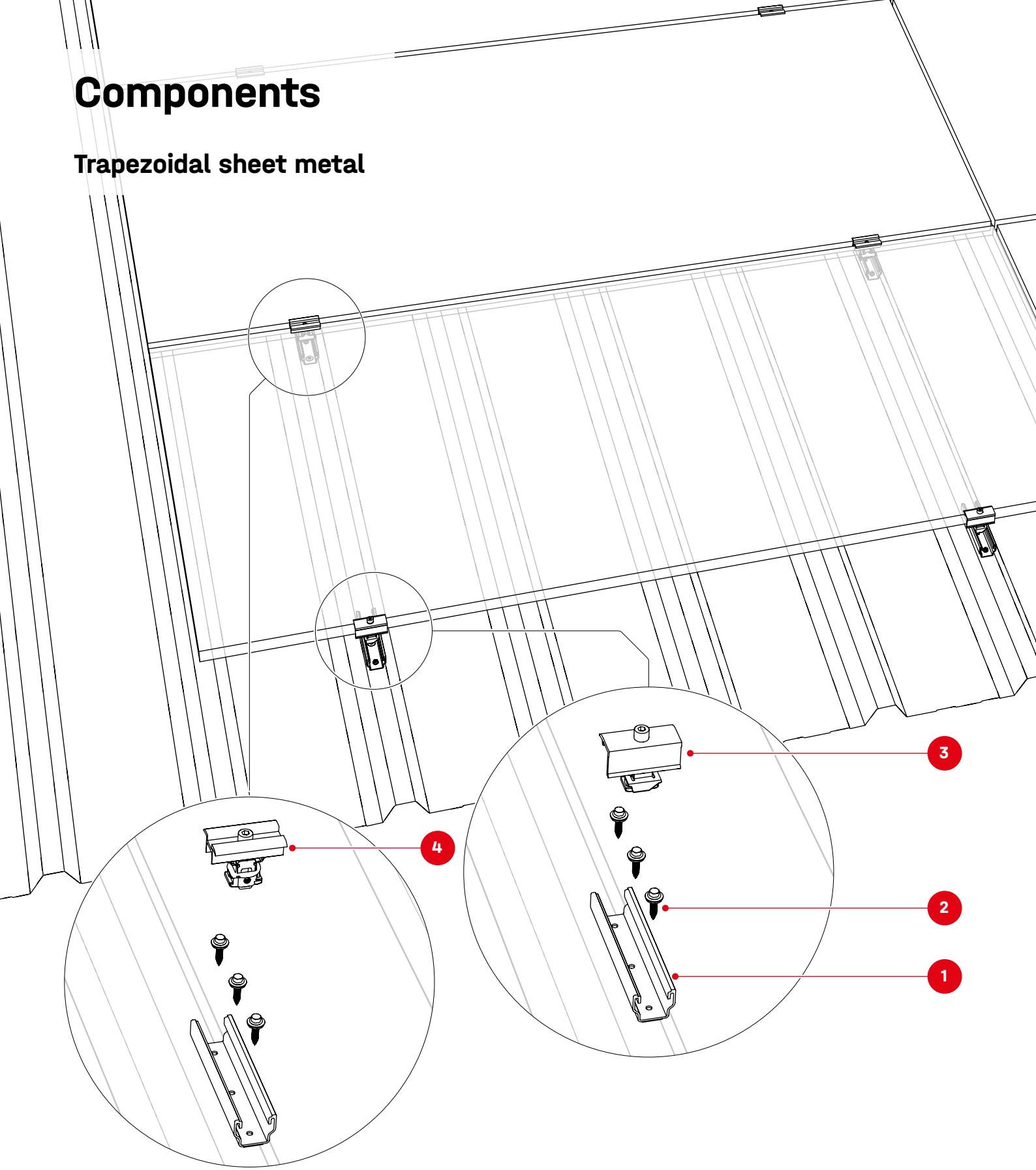

1 2001300 / 2004868 / 2002793 / 2004704
MultiRail 10 / 15 / 25 / High

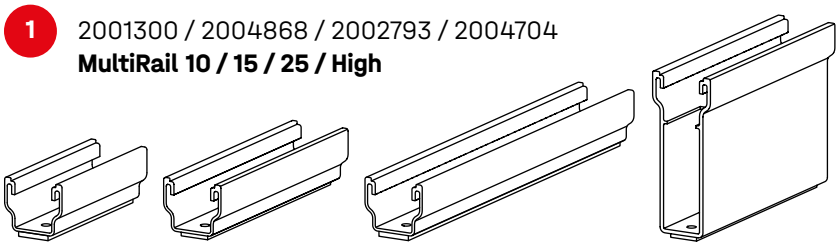

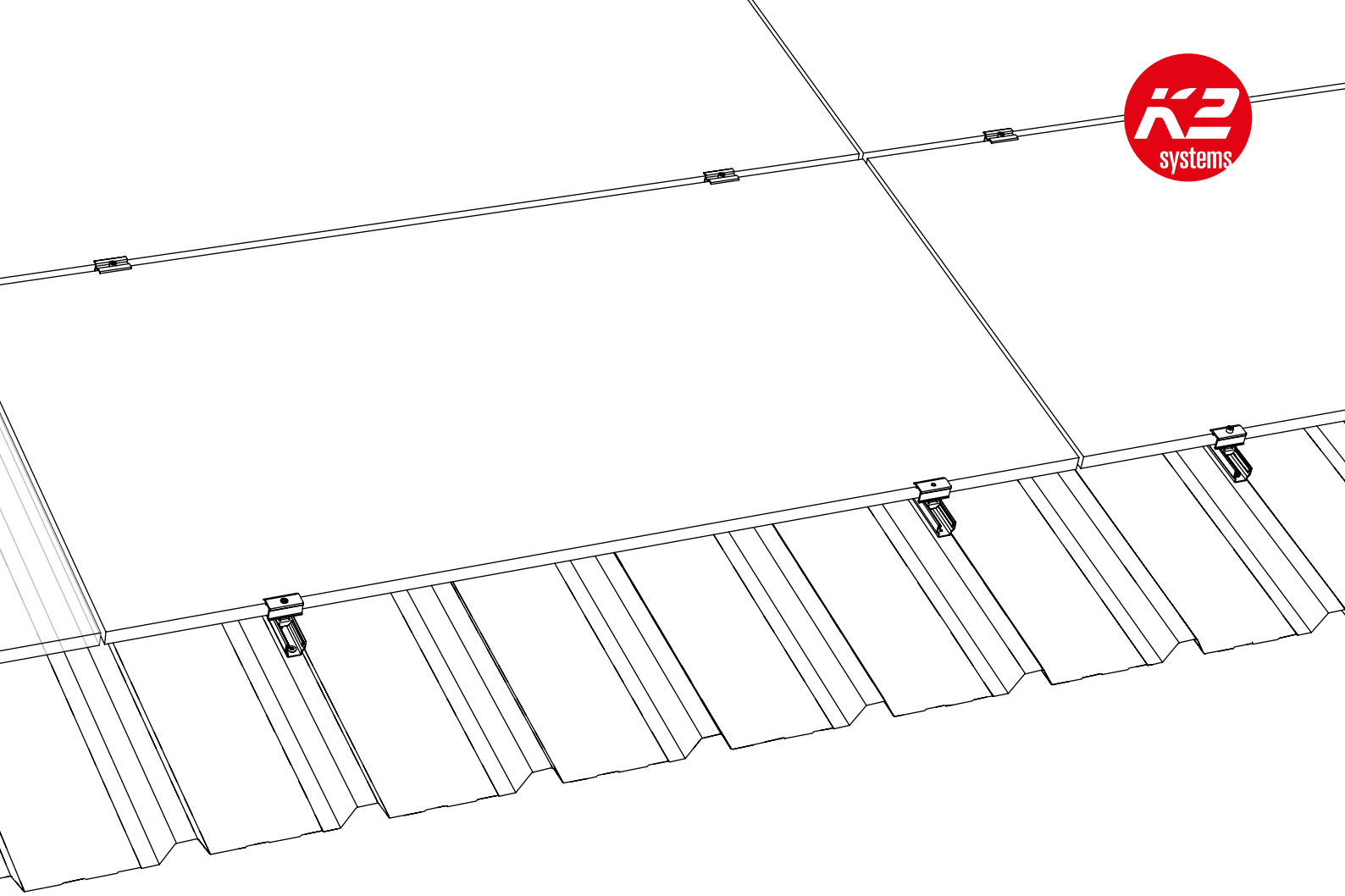

2 Item number project specific
Self-tapping screw with sealing washer

3 Item number project specific
Module end clamps

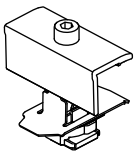

K2 Clamp EC
25 - 40

XS Clamp EC
30 / 33 / 35

4 Item number project specific
Module middle clamps

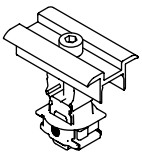

K2 Clamp MC
25 - 40

XS Clamp MC
30 / 33–35

Optional

See page 20!

2003191
RailUp Set

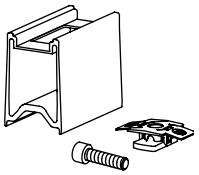

2004231
TerraGrif QL

2001881
TerraGrif K2SZ

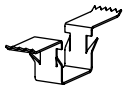

Components

Corrugated sheet metal

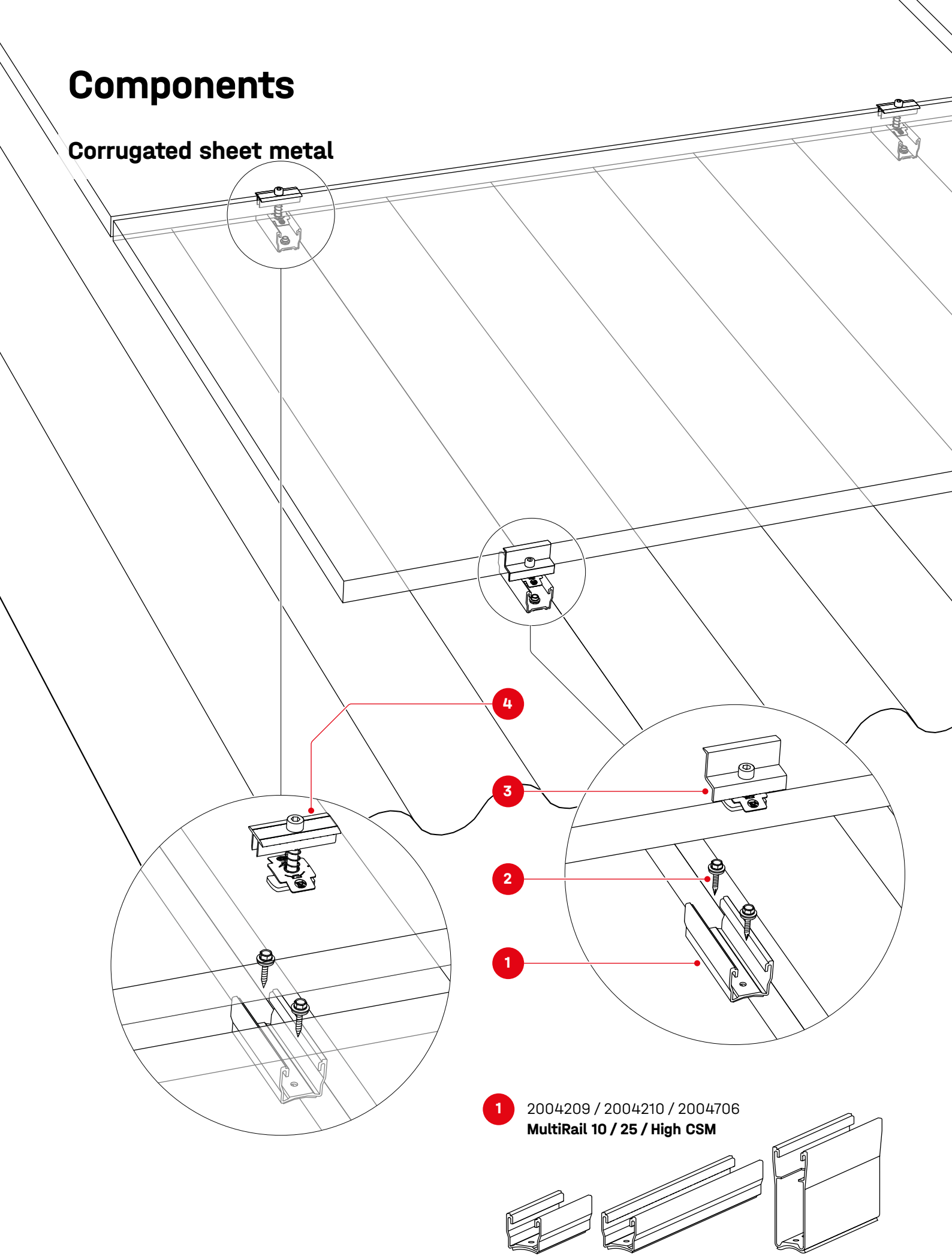

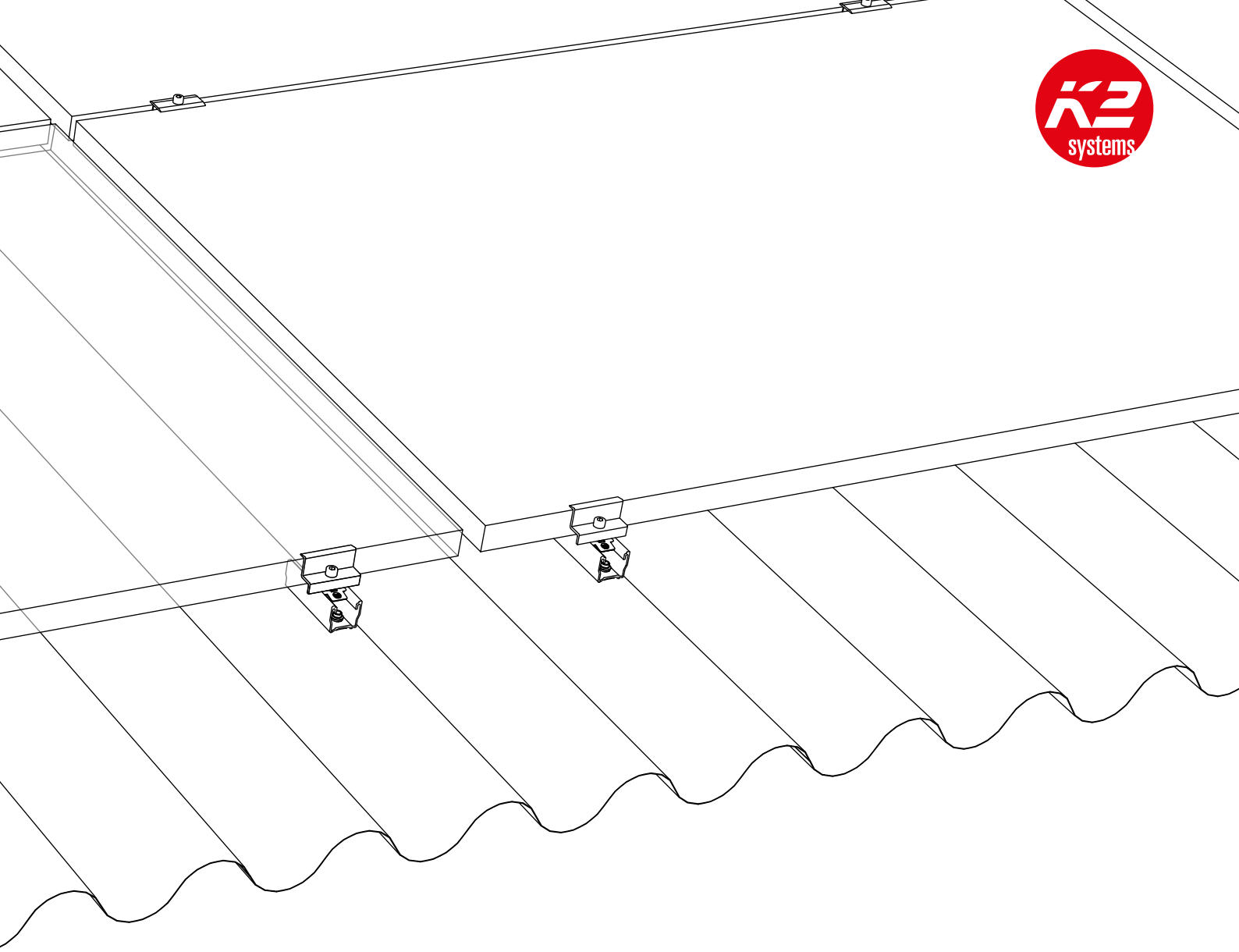

2 Item number project specific
Self-tapping screw with sealing washer

3 Item number project specific
Module end clamps

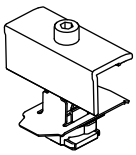

K2 Clamp EC
25 - 40

XS Clamp EC
30 / 33 / 35

4 Item number project specific
Module middle clamps

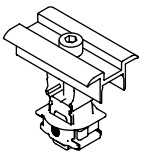

K2 Clamp MC
25 - 40

XS Clamp MC
30 / 33–35

Optional

See page 20!

2003191
RailUp Set

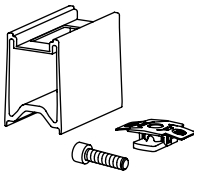

2004231
TerraGrif QL

2001881
TerraGrif K2SZ

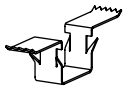

Assembly

Trapezoidal sheet metal

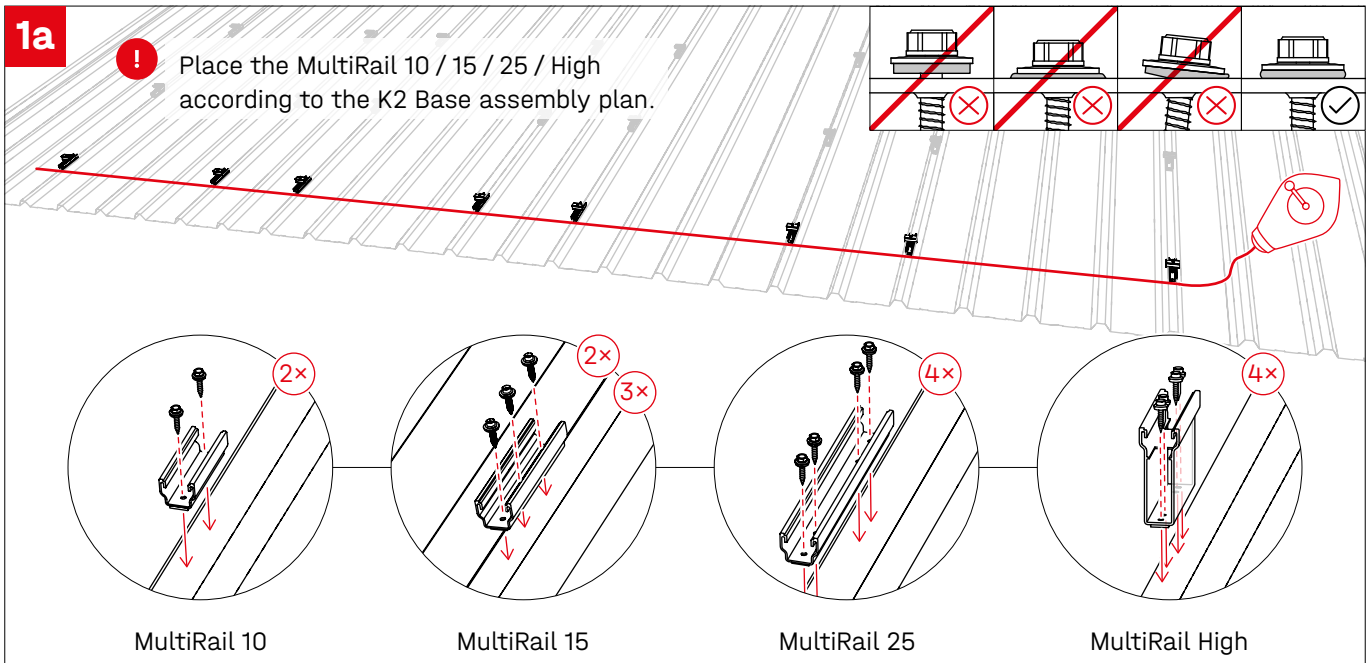

MultiRail 15: depending on the load case, it can be secured with 2 or 3 screws; see K2 Base report.

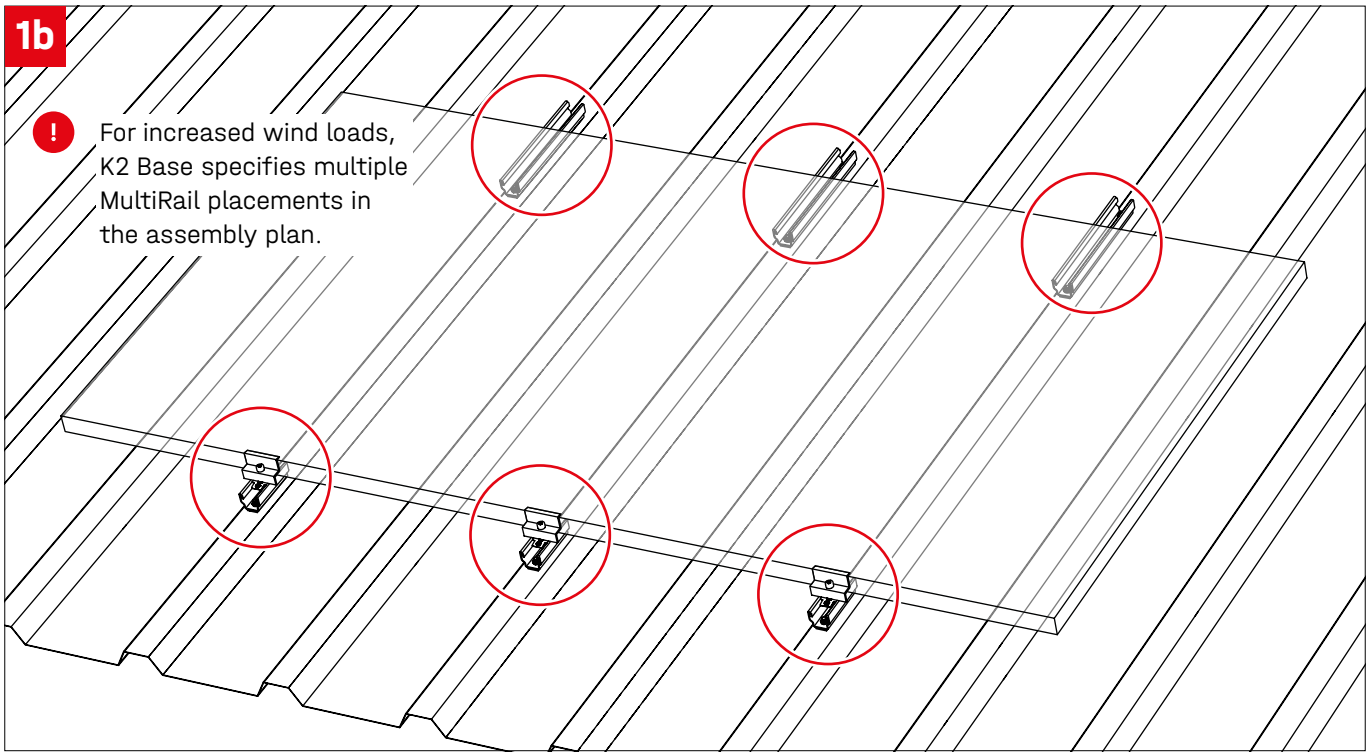

2a Distance template

$D_{10+25\,/\,10\,/\,15\,/\,25\,/\,High} = width_{Modul} - Clamp_{K2\,/\,XS}$

MultiRail	K2 Clamp	XS Clamp
MultiRail 10 + 25	155 mm	162 mm
MultiRail 10	80 mm	87 mm
MultiRail 15	132 mm	139 mm
MultiRail 25	230 mm	237 mm
MultiRail High	132 mm	139 mm

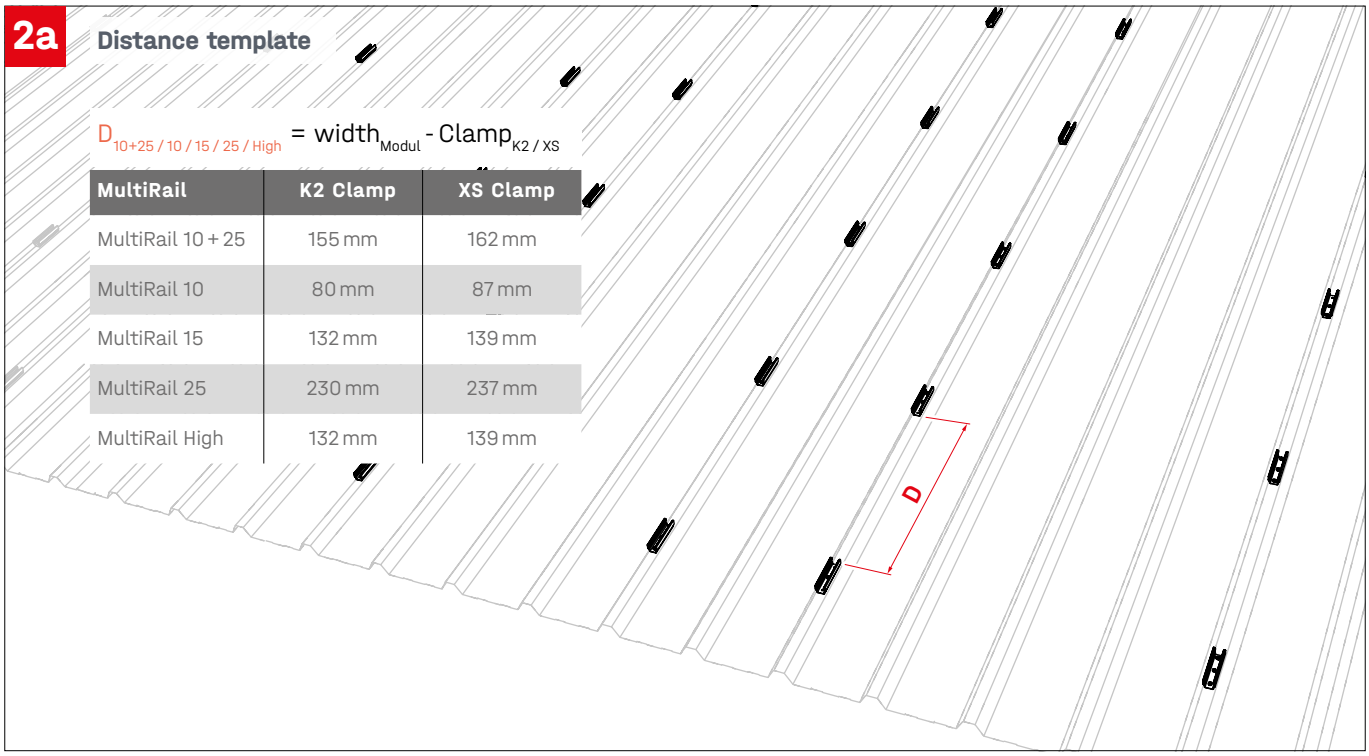

2b

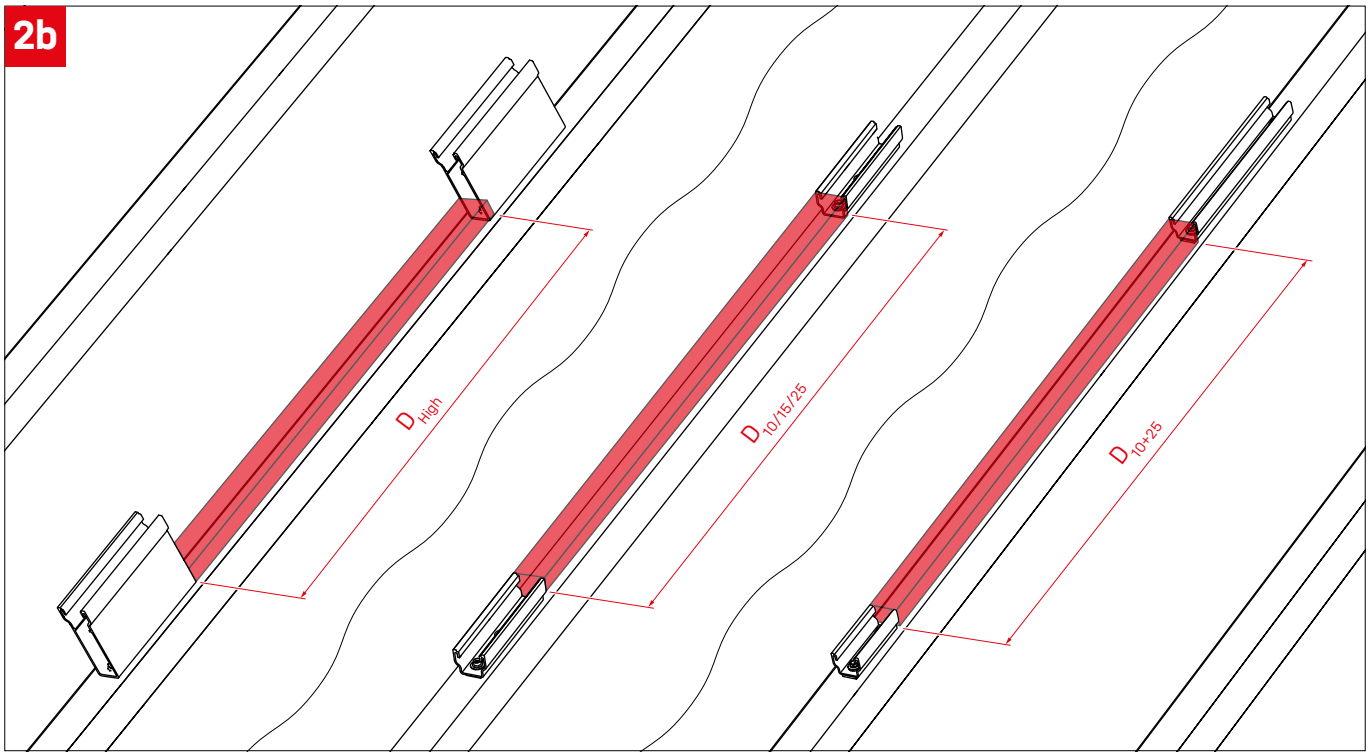

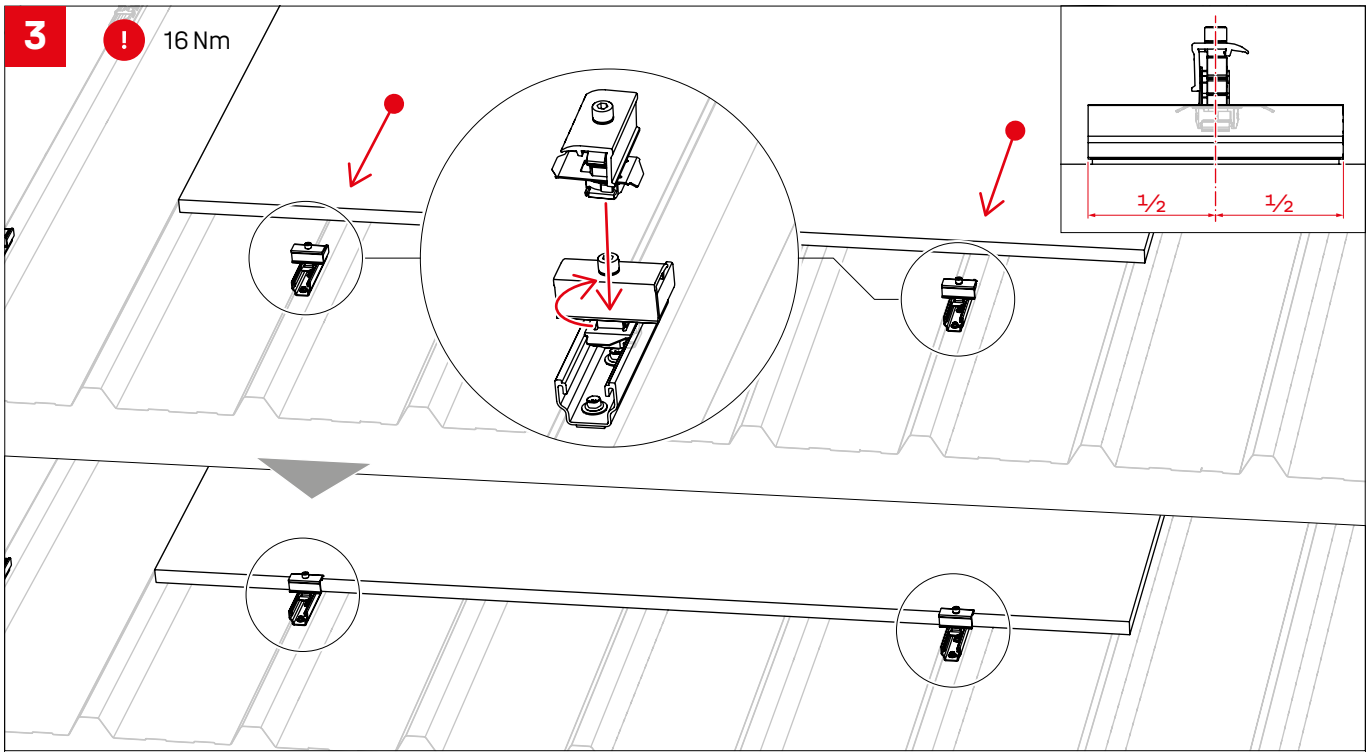
3
!
16 Nm
1/2
1/2

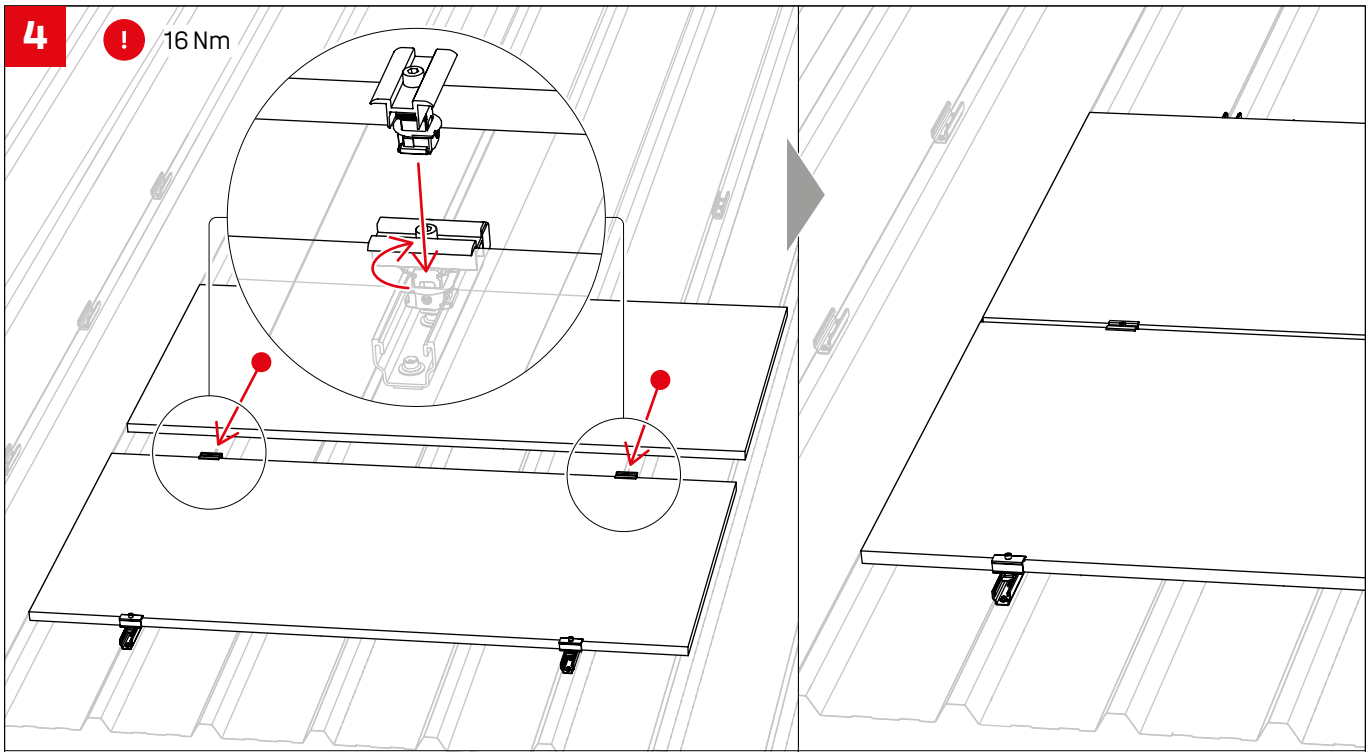
4
!
16 Nm

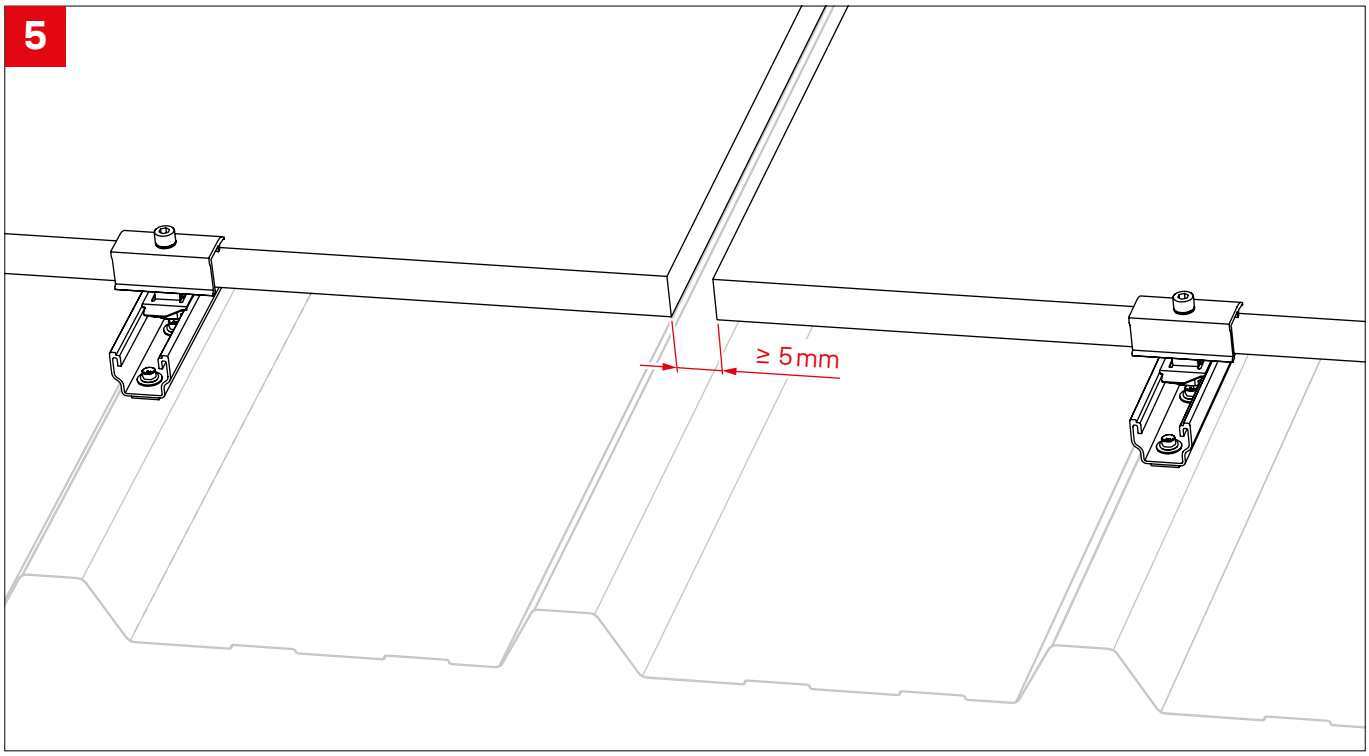
5
≥ 5 mm

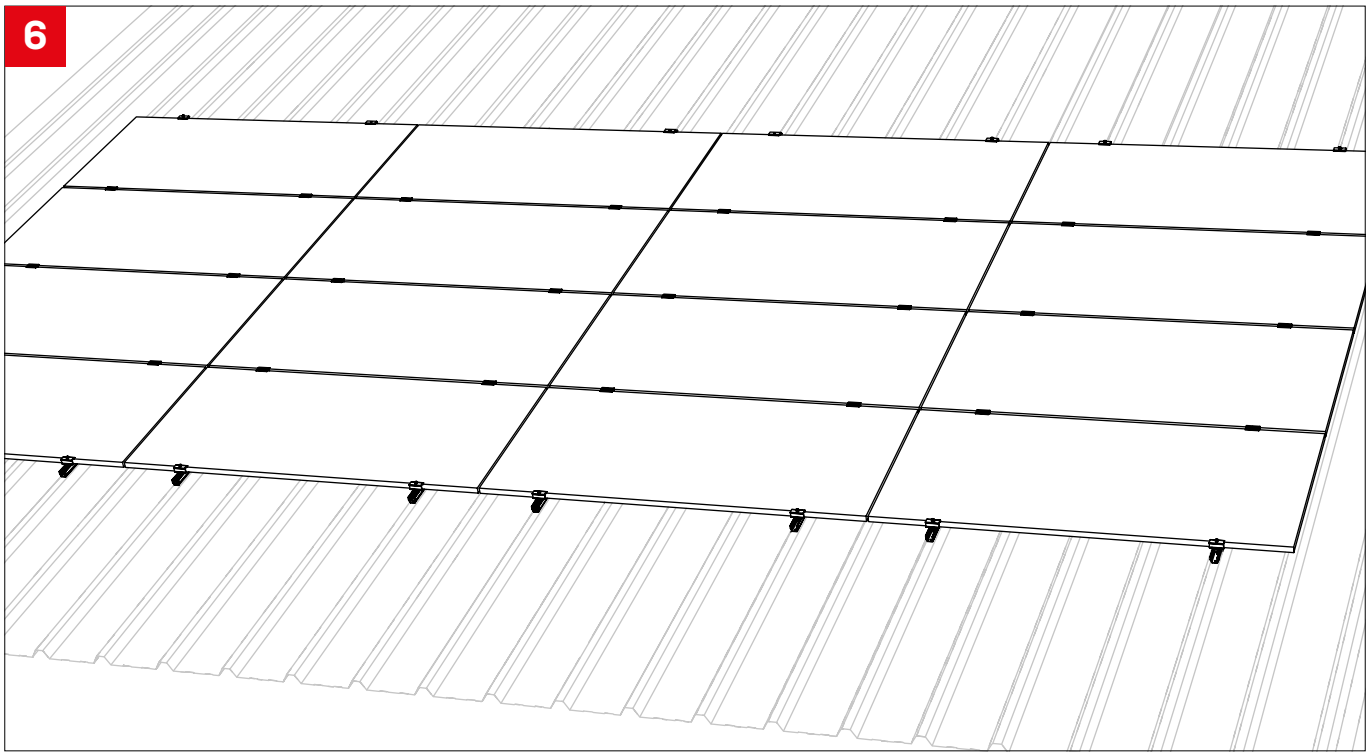
6

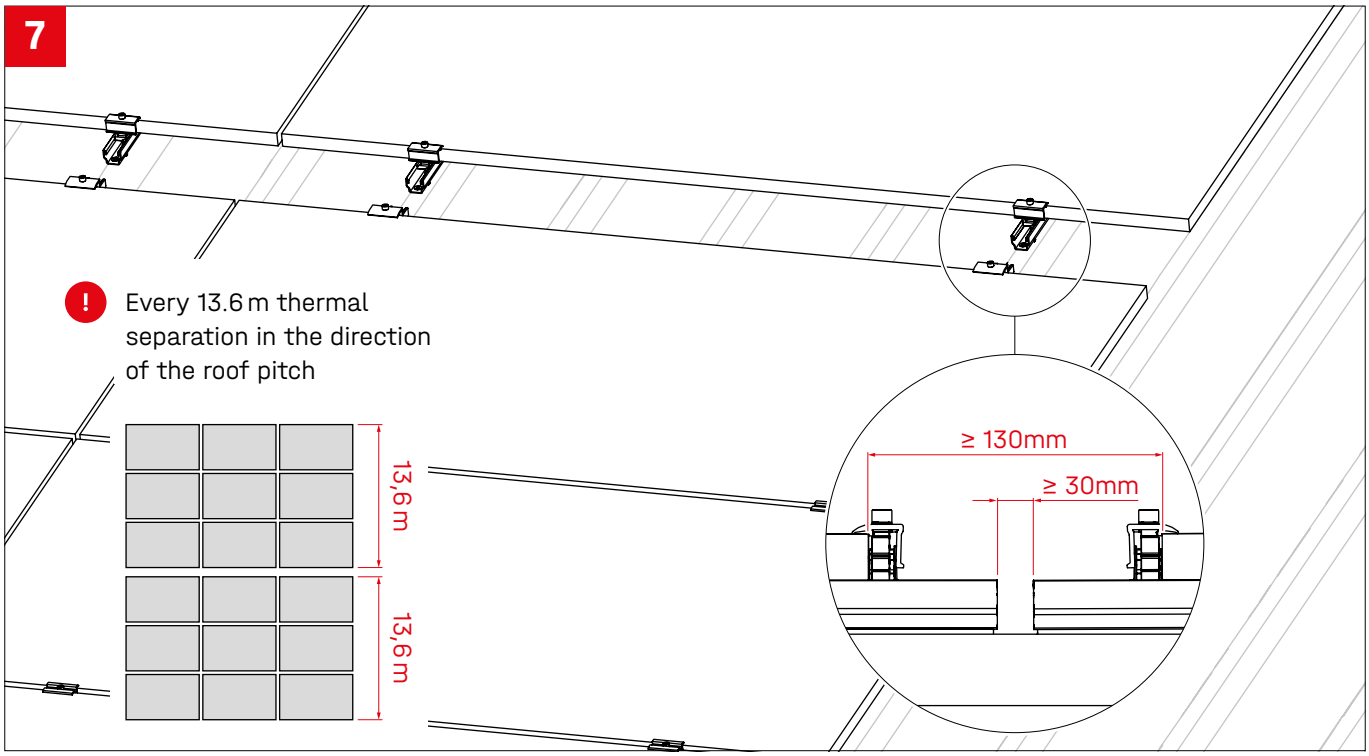
7
Every 13.6 m thermal separation in the direction of the roof pitch
13,6 m
13,6 m
≥ 130mm
≥ 30mm

Assembly

Corrugated sheet metal

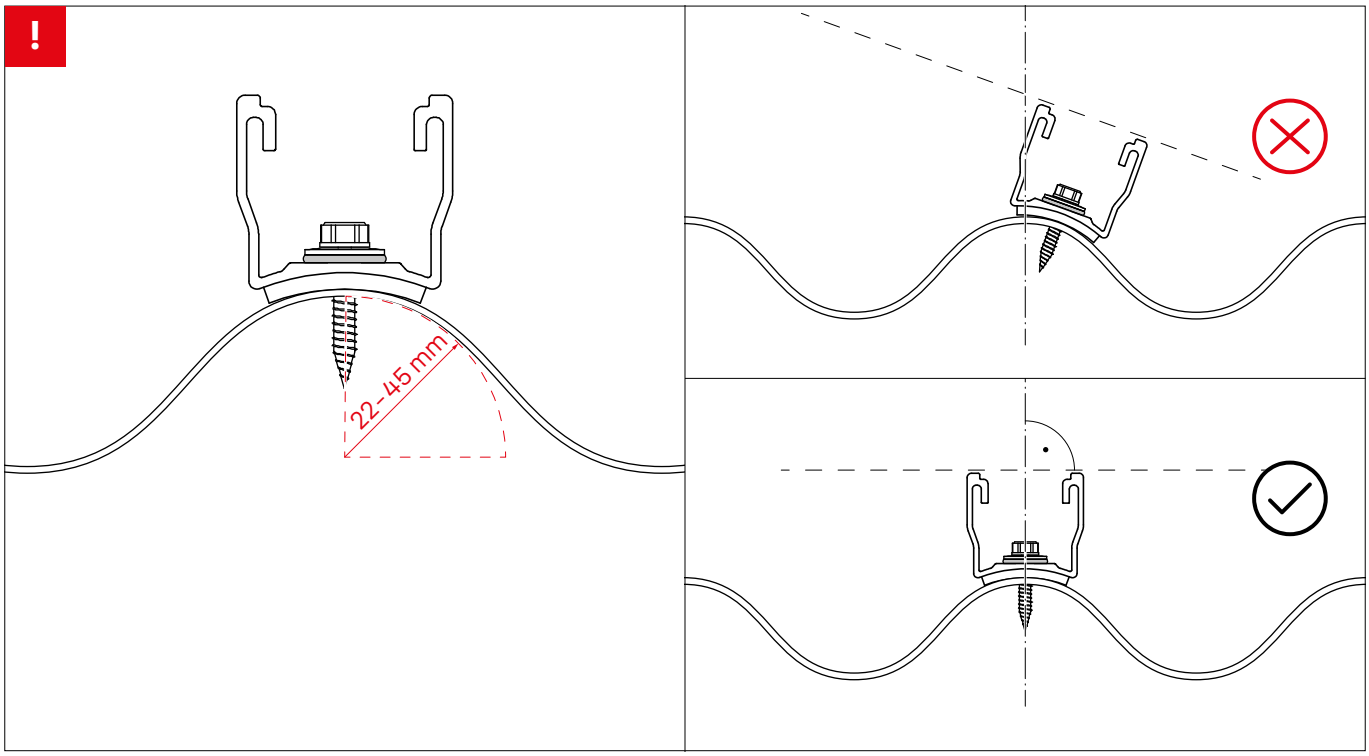

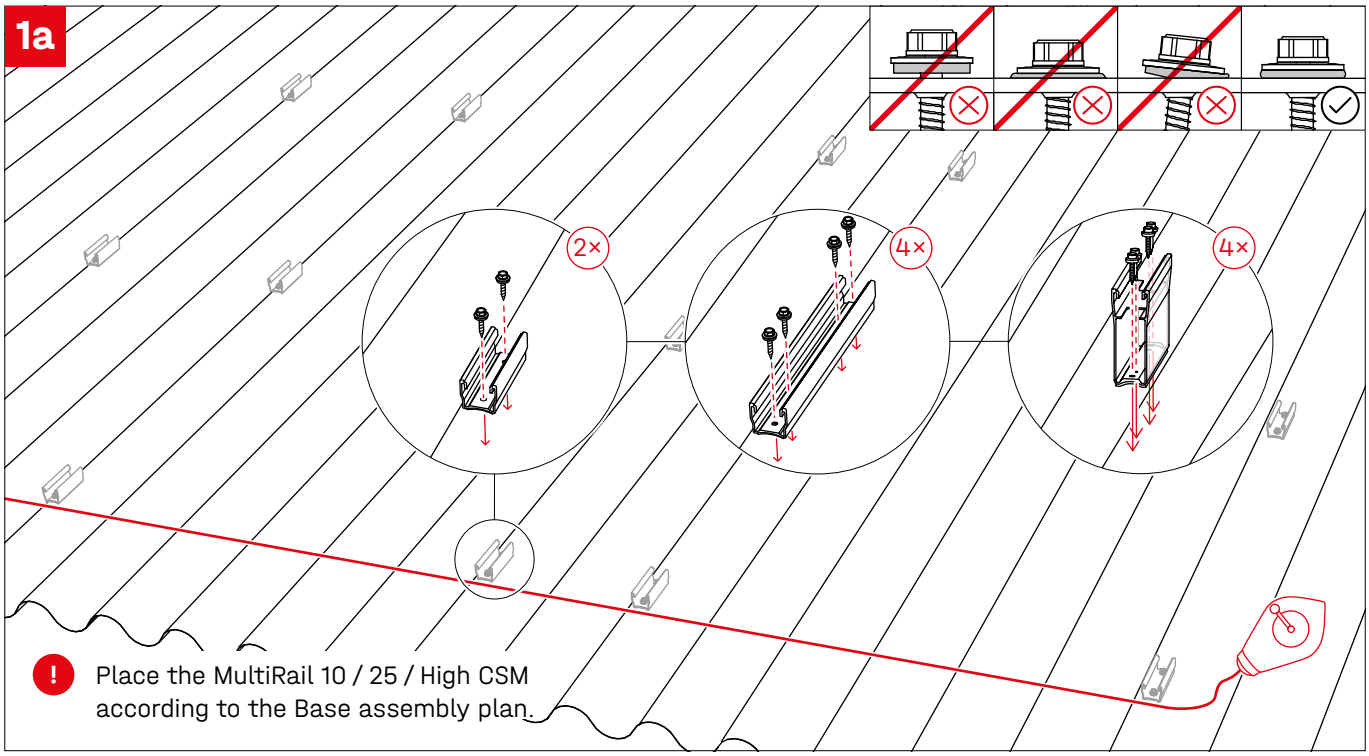

1b

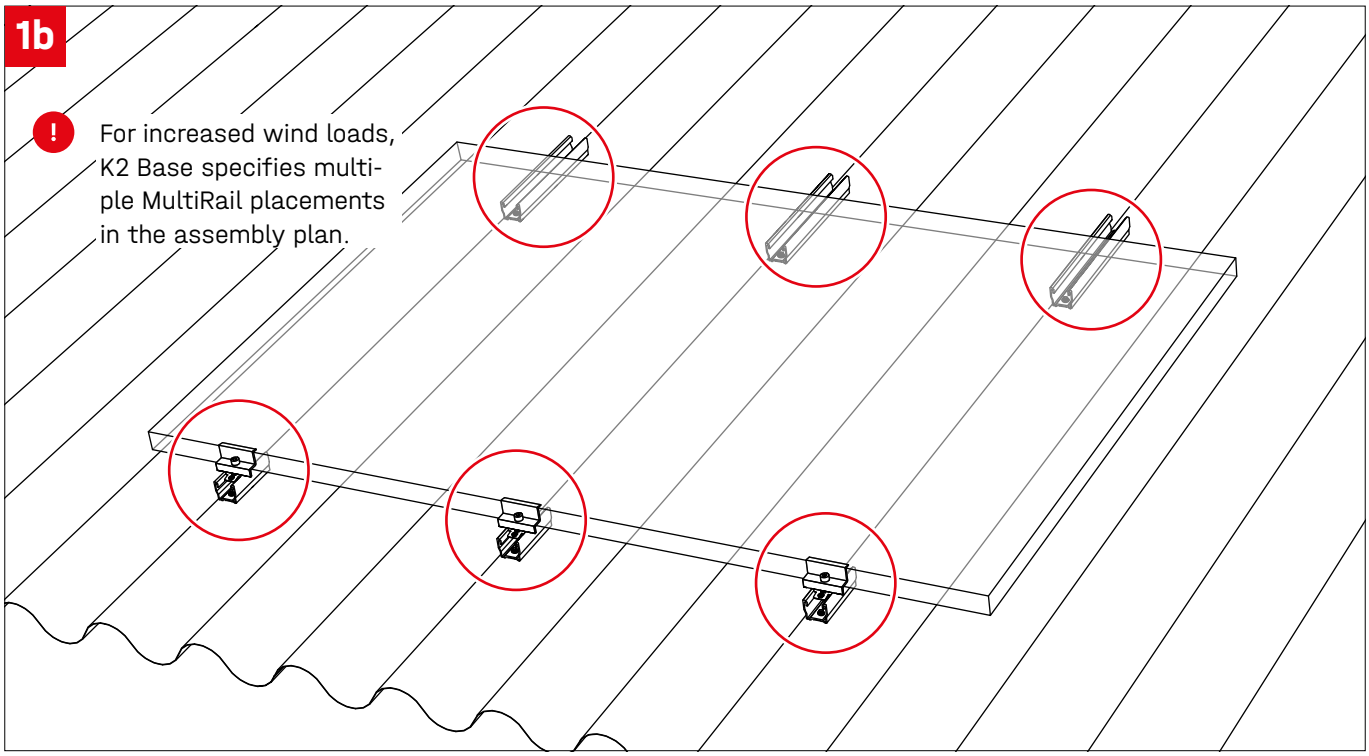

2 Distance template

$D_{10+25\,/\,10\,/\,25\,/\,High\ CSM} = width_{Modul} - Clamp_{K2\,/\,XS}$

MultiRail	K2 Clamp	XS Clamp
MultiRail 10 + 25 CSM	155 mm	162 mm
MultiRail 10 CSM	80 mm	87 mm
MultiRail 25 CSM	230 mm	237 mm
MultiRail High CSM	132 mm	139 mm

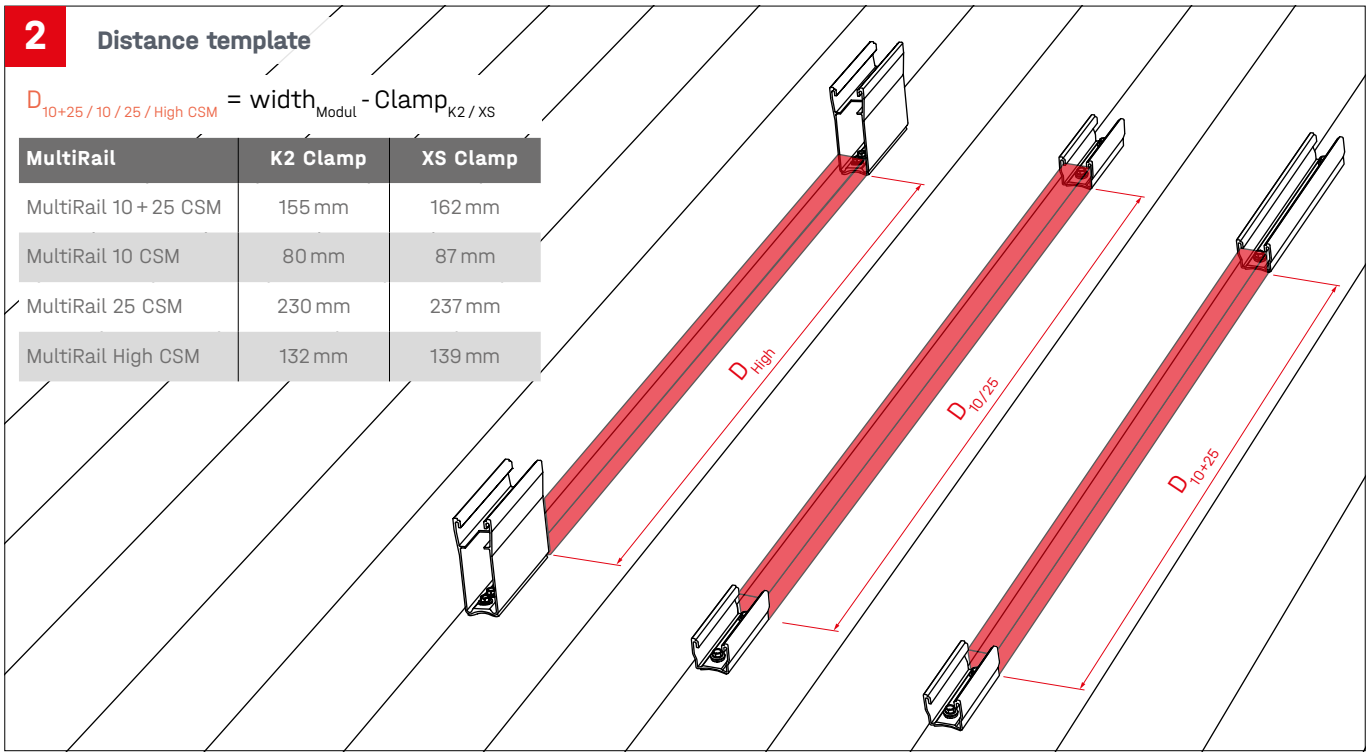

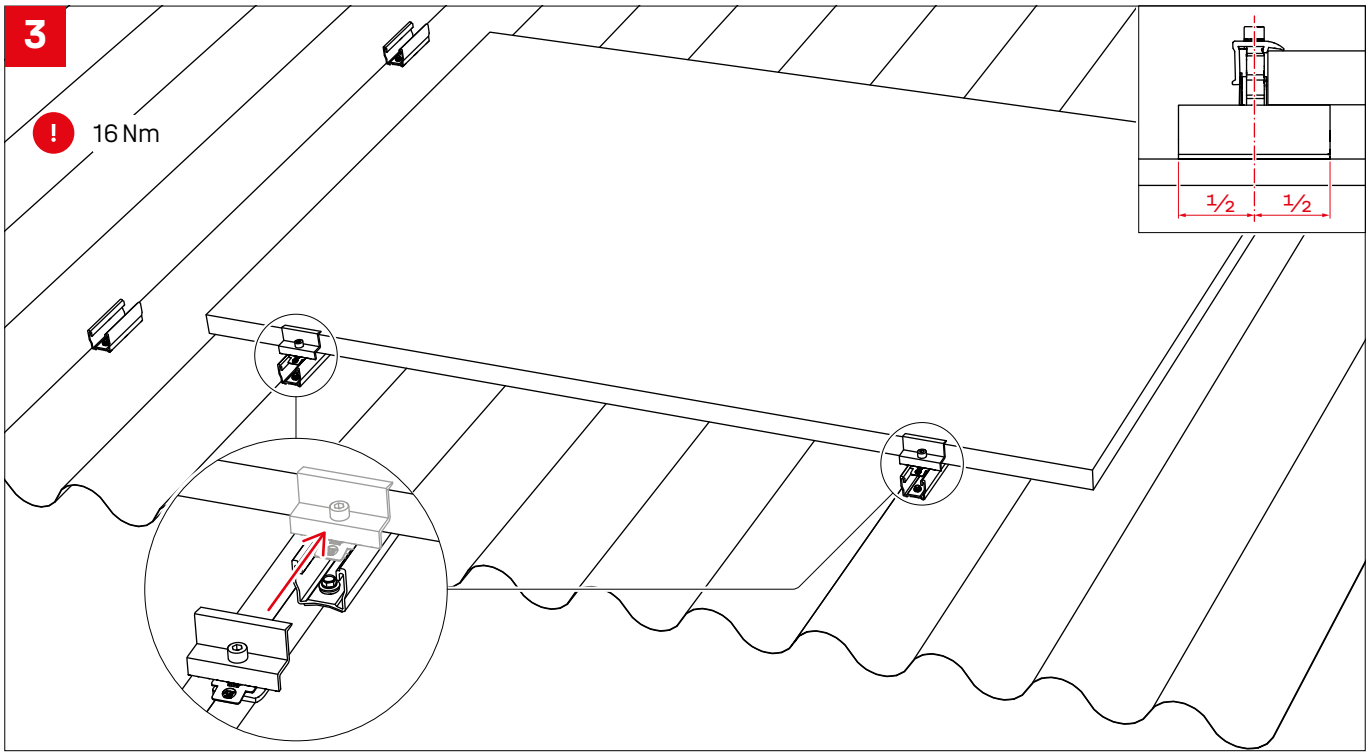
3
!
16 Nm
1/2
1/2

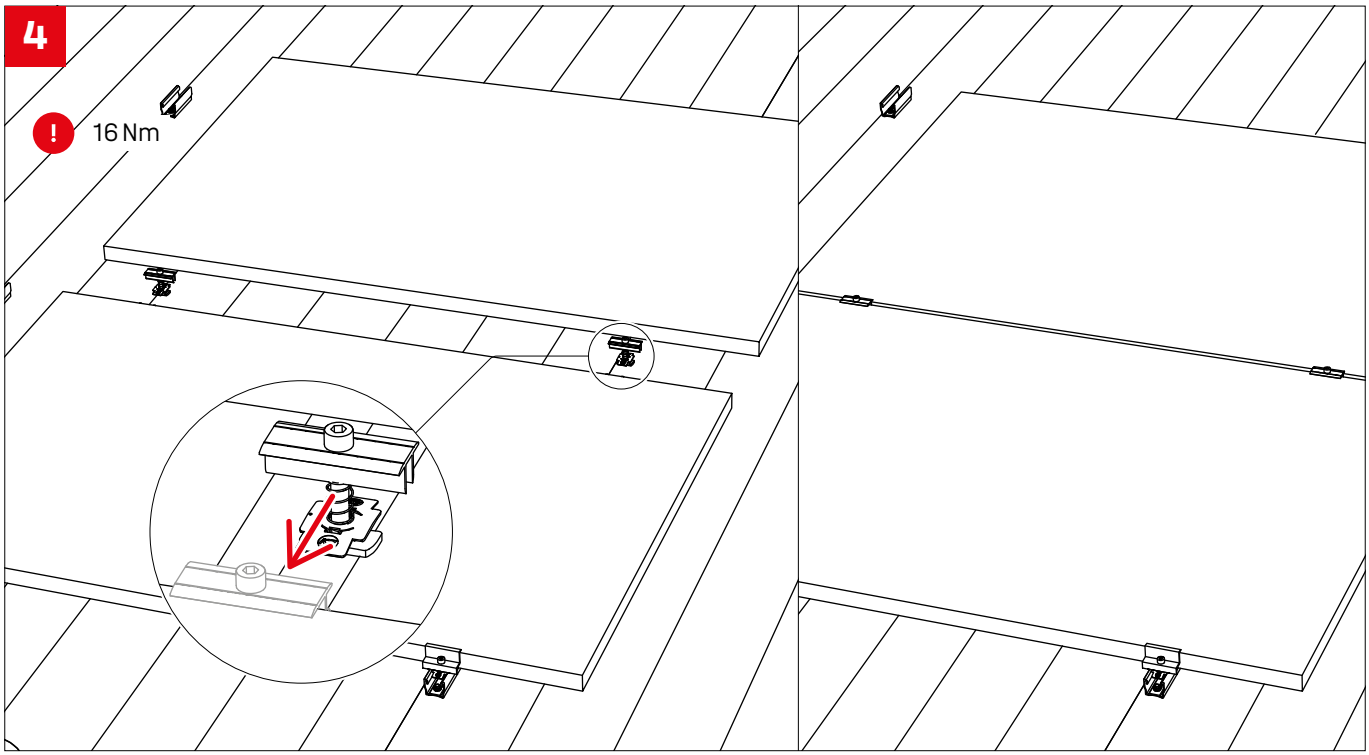
4
!
16 Nm

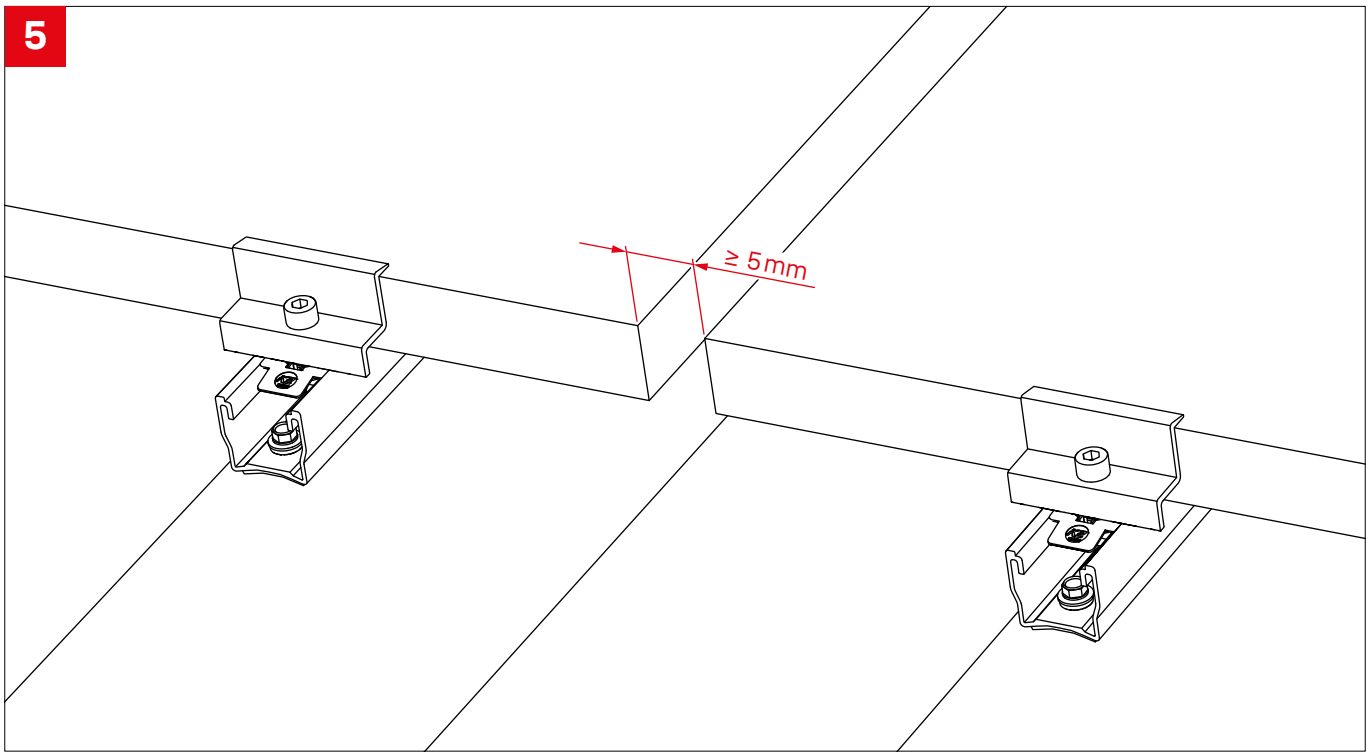
5
≥ 5 mm

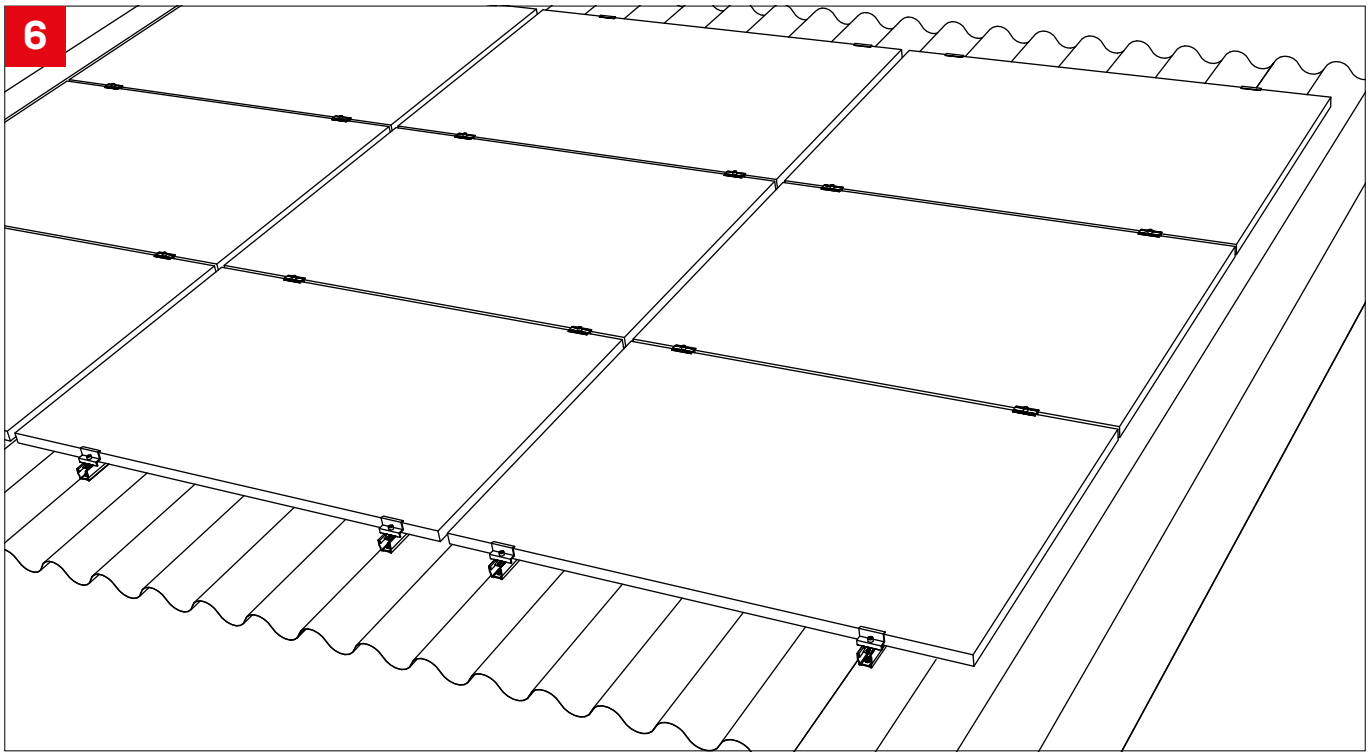
6

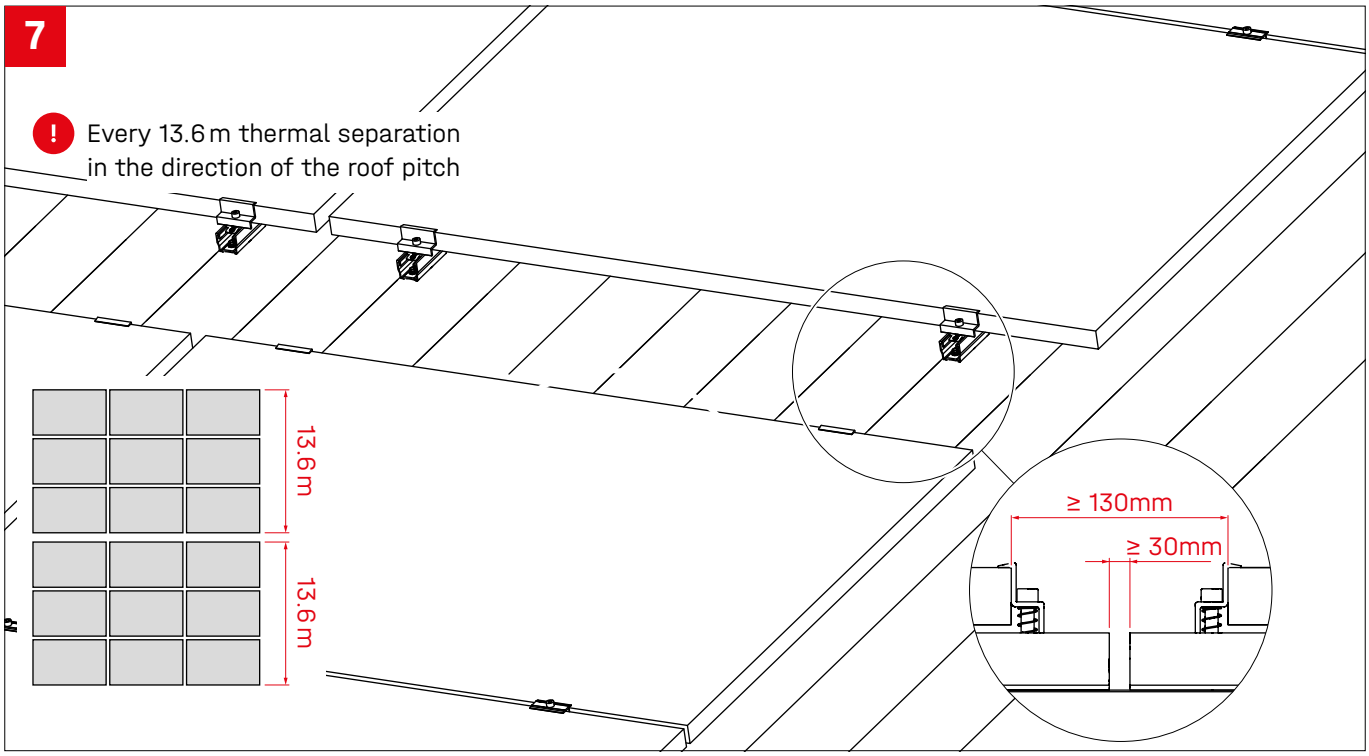
7
Every 13.6 m thermal separation in the direction of the roof pitch
13.6 m
13.6 m
≥ 130mm
≥ 30mm

Optional assembly steps

Module frame grounding - TerraGrif QL / K2 Clamp

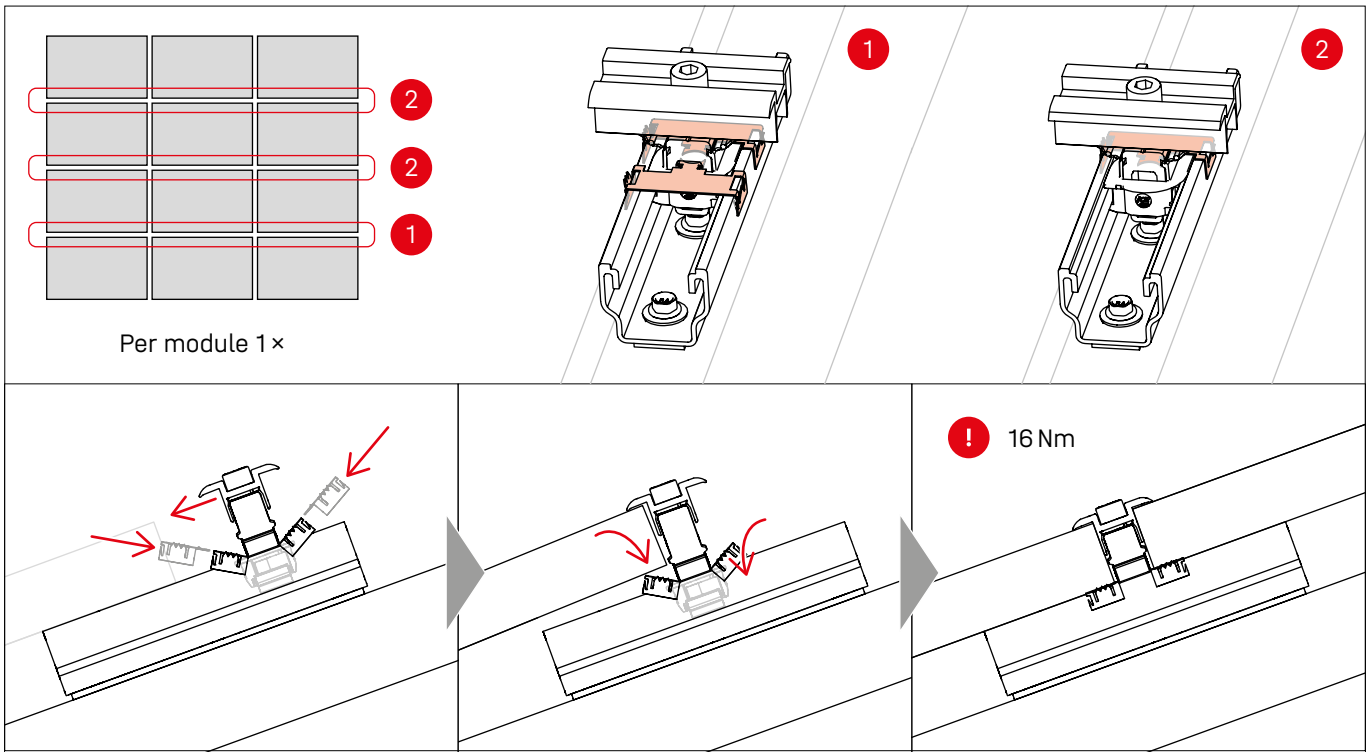

Module frame grounding - TerraGrif K2SZ / XS Clamp

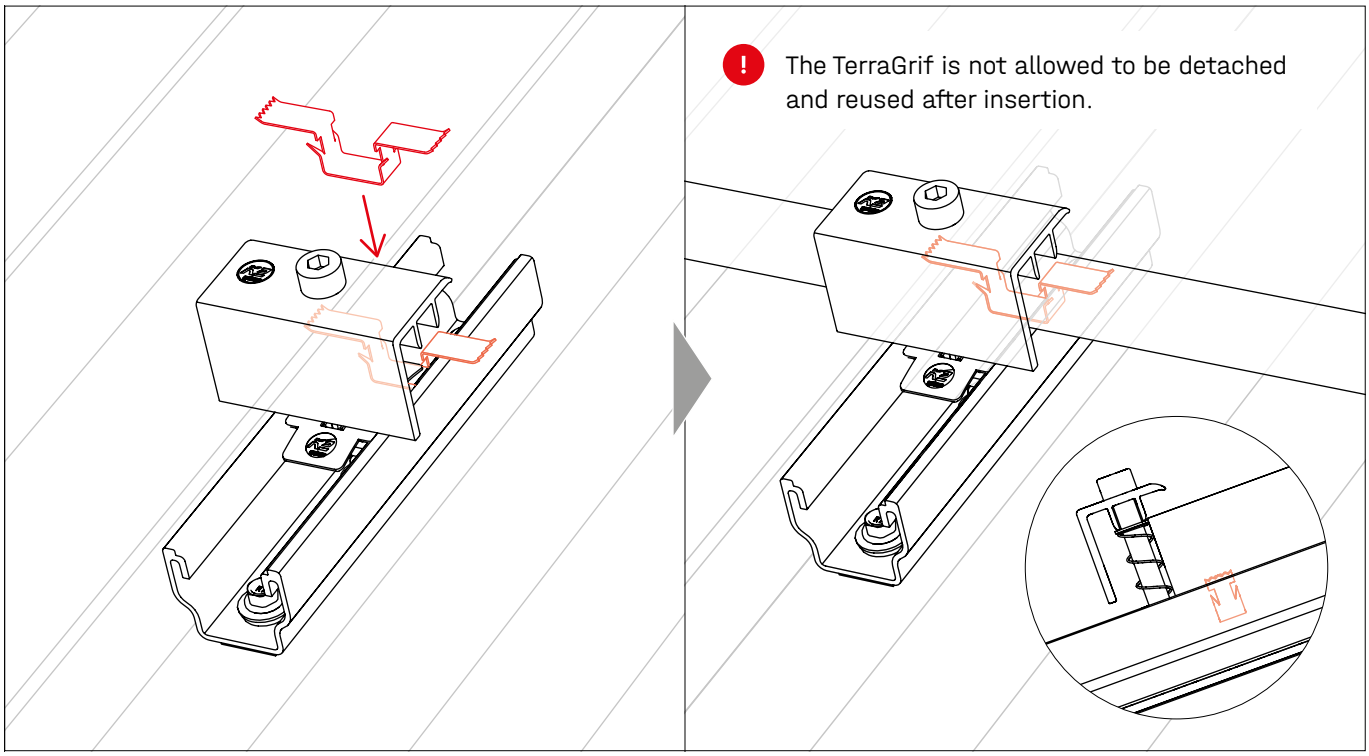

Roof-parallel elevation with RailUp

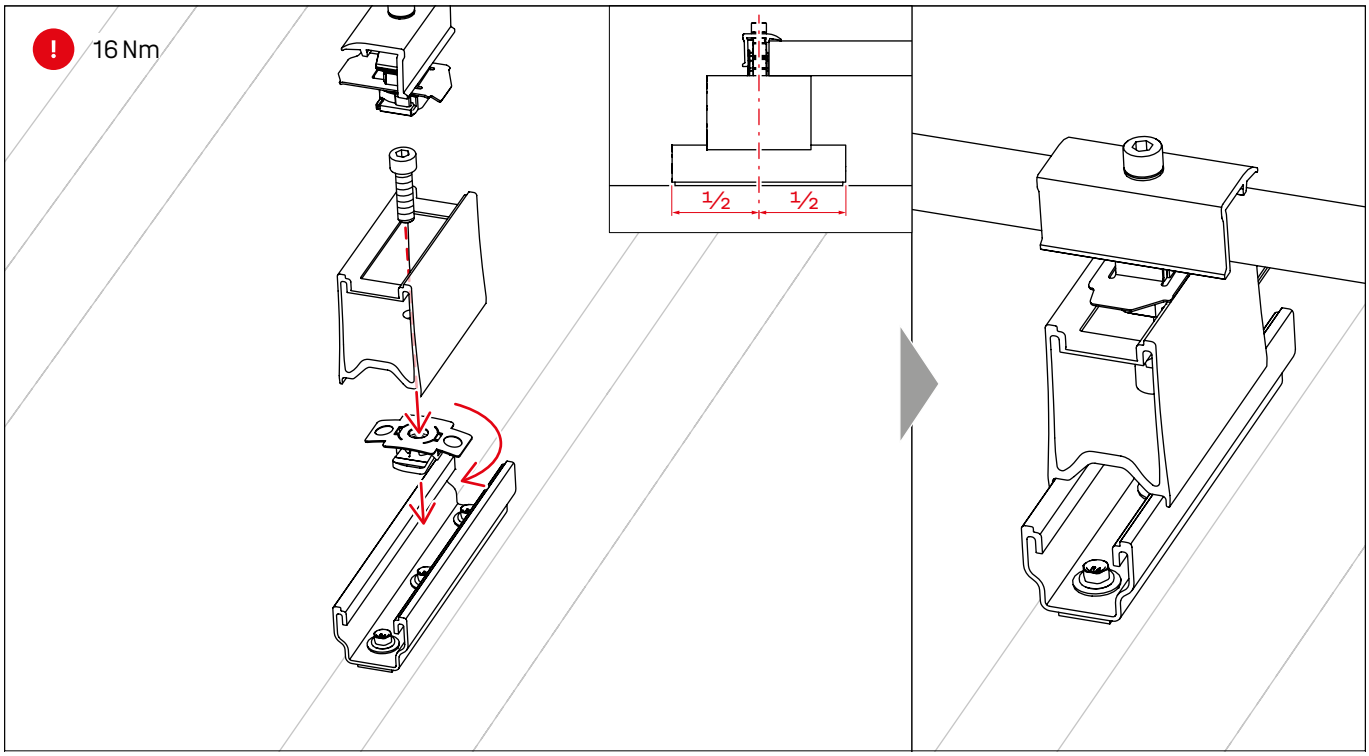

Notes

Connecting Strength

Thank you for choosing a K2 mounting system.

Mounting ystems from K2 Systems are quick and easy to install. We hope these instructions have helped. Please contact us with any questions or suggestions for improvement. Our contact data:

- **k2-systems.com/en/contact**
- **Service Hotline: +49 7159 42059-0**

Our General Terms of Business apply. Please refer: k2-systems.com

K2 Systems GmbH
Haldenstraße 1 · 71272 Renningen · Germany
+49 (0) 7159 - 42059 - 0 · info@k2-systems.com · k2-systems.com

MultiRail Assembly EN V11 | 0826 · Subject to change
Product illustrations are exemplary and may differ from the original.