SUN SYNK

THREE-PHASE HYBRID INVERTER

INSTALLER MANUAL

SUN-25K-SG01HP3-EU-BM2/SUN-30K-SG01HP3-EU-BM3
SUN-40K-SG01HP3-EU-BM4/SUN-50K-SG01HP3-EU-BM4

Global Tech China Ltd, 3 Floor, Wai Yip Industrial Building.
171 Wai Yip Street, Kwun Tong, Kowloon, Hong Kong.
Tel: +852 2884 4318 Fax: +8522884 4816
www.sunsynk.com / sales@globaltech-china.com

v.1 (08/24/22)

PREFACE

This Installer Manual contains information needed for proper installation, operation, maintenance, and care of the Sunsynk Three-Phase Hybrid Inverter. A deep understanding of the instructions described in this document will help you get the most of your new inverter.

This document should be read thoroughly, and all the procedures described in this manual should be followed carefully. If you have questions or concerns about the operation and maintenance of this product, please contact our customer support.

All personnel involved in the installation, setup, operation, maintenance, and repair of this machine should read and understand this manual, mainly its safety instructions. Substandard performance and longevity, property damage, and personal injury may result from not knowing and following these instructions.

In order to ensure long product life, Sunsynk recommends that you utilize the product and perform maintenance by correctly following the instructions described in this guide. The manufacturer's warranty does not cover any damage resulting from the neglect of these instructions.

Sunsynk assumes no liability for damage caused by operation contrary to what is specified in this operating manual.

All information in this User Guide is based on the latest product information available at the time of printing approval. Sunsynk reserves the right to make changes at any time without notice and without incurring any obligation.

Please always keep this manual together with the inverter as a reference to everyone who uses this product.

Table of Contents

1. SAFETY 5
   1.1. General Safety 5
   1.2. Symbols 5
   1.3. Safety Instructions 6
   1.4. Disposal Remarks 6

2. PRODUCT INTRODUCTION 7
   2.1. System Overview 7
   2.2. Product Size 8
   2.3. Features 9
   2.4. Basic System Architecture 10

3. TECHNICAL SPECIFICATIONS 11

4. INSTALLATION 13
   4.1. Parts List 13
   4.2. Selecting the Mounting Area 14
   4.3. Mounting the Inverter 15
   4.4. Battery Connection 17
      4.4.1. Function Ports Definition 19
   4.5. Grid connection and backup load connection 20
   4.6. PV Connection 21
      4.6.1. PV Module Selection 22
      4.6.2. PV Module Wiring 22
   4.7. Connecting the CT Coil 24
      4.7.1. System Connection for the CHNT Meter 25
      4.7.2. System Connection for the Eastron Meter 25
   4.8. Earth Connection (MANDATORY) 28
   4.9. WIFI Connection 28
   4.10. Wiring System for Inverter 29
   4.11. Wiring Diagram 30
   4.12. Typical Application Diagram of Diesel Generator 32
   4.13. Three Phase Parallel Connection Diagram 33

5. OPERATION 34
   5.1. Display 34
   5.2. Switching ON/OFF 35
   5.3. Home Page 35
   5.4. Status Page 36
   5.5. System Flow Page 37
   5.6. Setup Page 38
   5.7. Set Time (Clock) 38

5.8. Set Company Name / Beeper / Auto dim 39
5.9. Factory Reset and Lock Code 40
5.10. Battery Setup Page 41
5.11. Generator & Battery Page 42
5.12. Battery Discharge Page 45
5.13. Setting Up a Lithium Battery 47
5.14. Program Charge & Discharge Times 52
5.15. Grid Supply Page 55
5.16. Advanced Settings for Paralleling Inverters 56
5.17. Solar Power Generated 59
5.18. Grid Power 59
5.19. Advanced Settings for Wind Turbines 60
5.20. Advanced Settings for Auxiliary Load 61
5.21. Advanced Settings for Peak Shaving 62
5.22. Fault Codes 63
5.23. Operation Modes 67
5.23.1. MODE I: Basic 67
5.23.2. MODE II: With Generator 67
5.23.3. MODE III: With Smart-Load 68
5.23.4. MODE IV: AC Couple 68

6. COMMISSIONING 69

6.1. Start-Up / Shutdown Procedure 69
6.2. Information for Commissioning the Inverter 70
6.3. GDFI Fault 71

7. MAINTENANCE 71

APPENDIX A 71

APPENDIX B 73

1. SAFETY

1.1. General Safety

- This device should only be used in accordance o instructions within this manual and in compliance with local, regional and national laws and regulations. Only allow this device to be installed, operated, maintained, repaired by other persons who have also read and understood this manual. Ensure the manual is included with this device should it be passed to a third party.
- DO NOT allow minors, untrained personnel, or person(s) suffering from a physical or mental impairment that would affect their ability to follow this manual, install, maintain or repair this device.
- Any untrained personnel who might get near this device while it is in operation MUST be informed that it is dangerous and instructed carefully on how to avoid injury.

1.2. Symbols

⚠ WARNING	This symbol indicates information that if ignored, could result in personal injury or even death due to incorrect handling.
⚠ CAUTION	This symbol indicates information that if ignored, could result in personal injury or physical damage due to incorrect handling.
NOTICE	Indicates information that is considered important, but not hazard-related.

1.3. Safety Instructions

⚠ WARNING

HIGH LIFE RISK DUE TO FIRE OR ELECTROCUTION.

The Sunsynk Single-Phase Hybrid Inverter can only be installed by a qualified licensed electrical contractor. This is not a DIY product.

- Be sure to read this manual thoroughly before installation.
- Do not attempt to install the inverter by yourself. Installation work must be carried out in compliance with national wiring standards and by suitably qualified personnel only. Do not turn on the power until all installation work is complete.
- Do not disassemble the inverter. If you need repair or maintenance, contact a professional service centre.
- Always use an individual power supply line protected by a circuit breaker and operating on all wires with a distance between contacts of at least 3mm for this unit.
- The unit must be correctly grounded and the supply line must be equipped with a suitable breaker and RCD to protect people.
- Disconnect all wires/cables before performing any maintenance or cleaning to reduce the risk of electrical shock.
- The unit is not explosion-proof, so it should not be installed in an explosive atmosphere.¬
- Never touch electrical components immediately after the power supply has been turned off since the system can still have residual energy, so electric shock may occur. Therefore, after turning off the power, always wait 5 minutes before touching electrical components.
- This unit contains no user-serviceable parts. Always consult an authorised contractor for repairs.

1.4. Disposal Remarks

DO NOT dispose this product with domestic waste!

Electrical devices should be disposed of in accordance with regional directives on electronic and/ or electronic-waste disposal. In case of further questions, please consult your supplier. In some cases, the supplier can take care of proper disposal.

2. PRODUCT INTRODUCTION

The Sunsynk Three-Phase Hybrid Inverter is a highly efficient power management tool that allows the user to hit those 'parity' targets by managing power-flow from multiple sources such as solar, mains power (grid) and generators, and then effectively storing and releasing power as and when utilities require.

2.1. System Overview

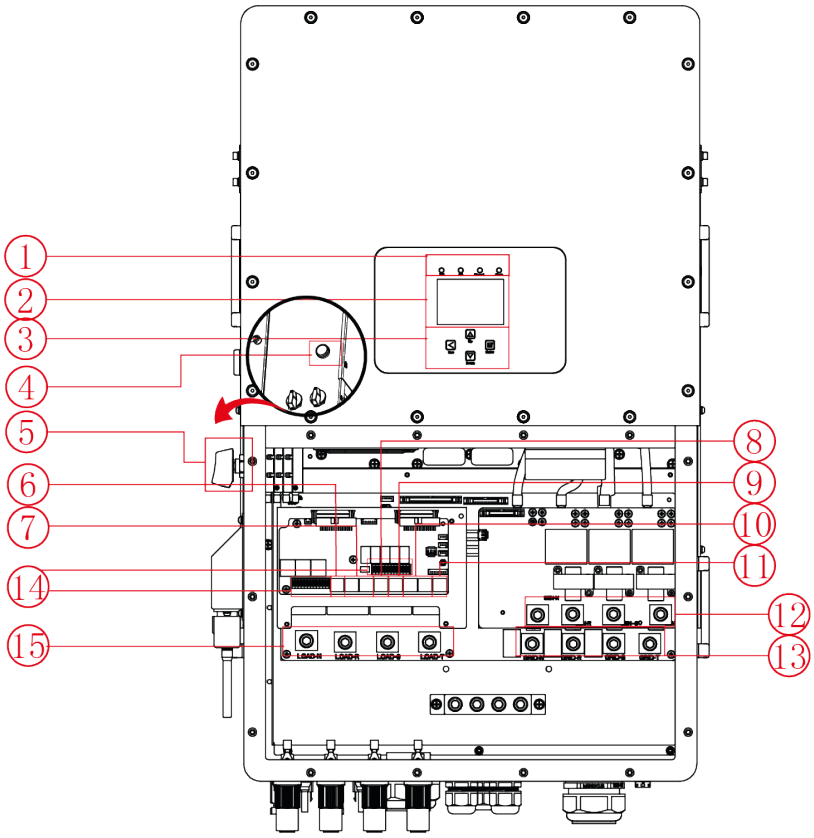

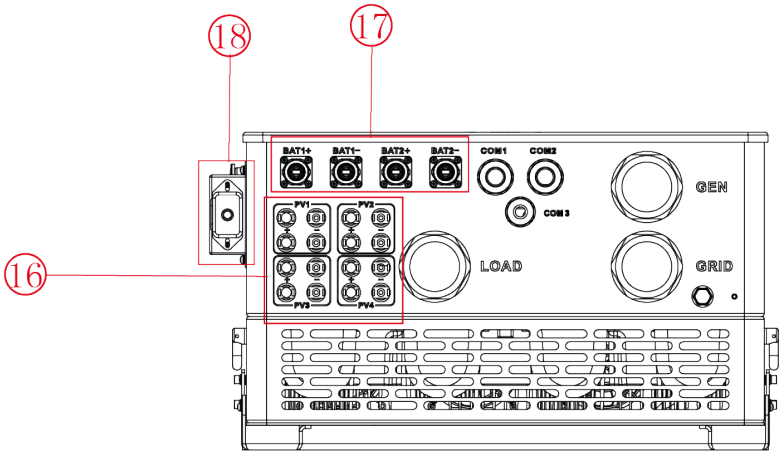

1. Inverter Indicators
2. LCD Display
3. Function Buttons
4. Power on/off button
5. DC switch
6. Parallel port
7. Meter-485 port
8. Battery input connectors
9. Function Port
10. Modbus Port
11. BMS Port
12. PV input with two MPPT
13. Grid
14. Load
15. Generator input
16. WiFi Interface

2.2. Product Size

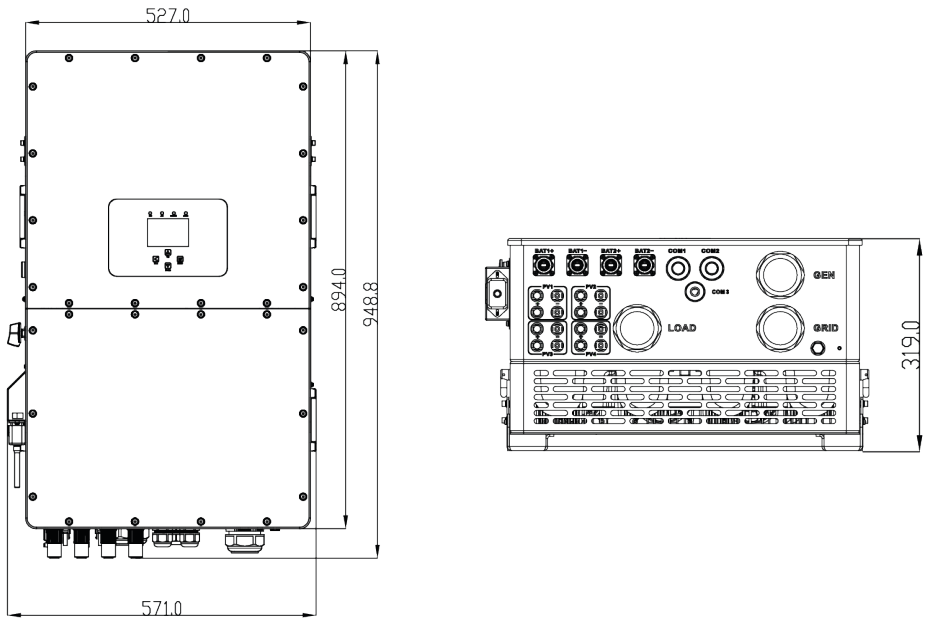

Inverter Size

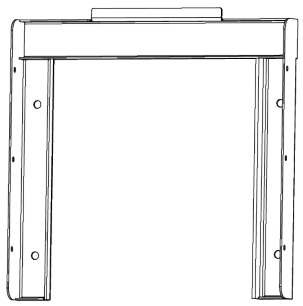

Mounting bracket

2.3. Features

INTERACTIVE

- Easy and simple to understand LCD display;
- Supporting Wi-Fi or GSM monitoring;
- Visual power flow screen;
- Built-in 2 strings for 1 MPP tracker and 1 string for 1 MPP tracker;
- Smart settable 3-stage MPPT charging for optimised battery performance;
- Auxiliary load function;
- Multi-inverter function: grid-tied and off-grid;

COMPATIBLE

- Compatible with mains electrical grid voltages or power generators;
- Compatible with wind turbines;
- 230V/400V Three-phase Pure Sinewave Inverter;
- It can power up both single phase and 3-phase loads;
- Self-consumption and feed-in to the grid;
- Auto restart while AC is recovering;
- Maximum charging/discharging current of 190A (8kW), 210A (10kW), and 240A (12kW);
- DC and AC couple to retrofit existing solar system;
- Compatible with a 48V low-voltage battery;

CONFIGURABLE

- Fully programmable controller;
- Programmable supply priority for battery or grid;
- Programmable multiple operation modes: on-grid/off-grid & UPS;
- Configurable battery charging - current/voltage based on applications by LCD setting;
- Configurable AC / solar / generator charger priority by LCD setting;
- 6 time periods for battery charging/discharging;

SECURE

- Overload/over-temperature/short-circuit protection;
- Smart battery charger design for optimised battery protection;
- Limiting function installed to prevent excess power overflow to grid;
- Isolation transformer design;

APPLICATIONS

- Marine (vessel power management);
- Power shedding (home/office/factory);
- UPS (fuel-saving systems);
- Remote locations with solar and wind generators;
- Building sites;
- Telecommunication;

2.4. Basic System Architecture

The following diagram explains the basic application and architecture of this 3-Phase Inverter.

- It also includes following devices to have a Complete running system.
- Generator or Utlity
- PV modules
- Batteries
- Normal and smart loads
- Monitoring system

Consult with your system integrator for other possible system architectures depending on your requirements.

This inverter can power all kinds of appliances in home or once environment, including motor type appliances such as refrigerator and air conditioner.

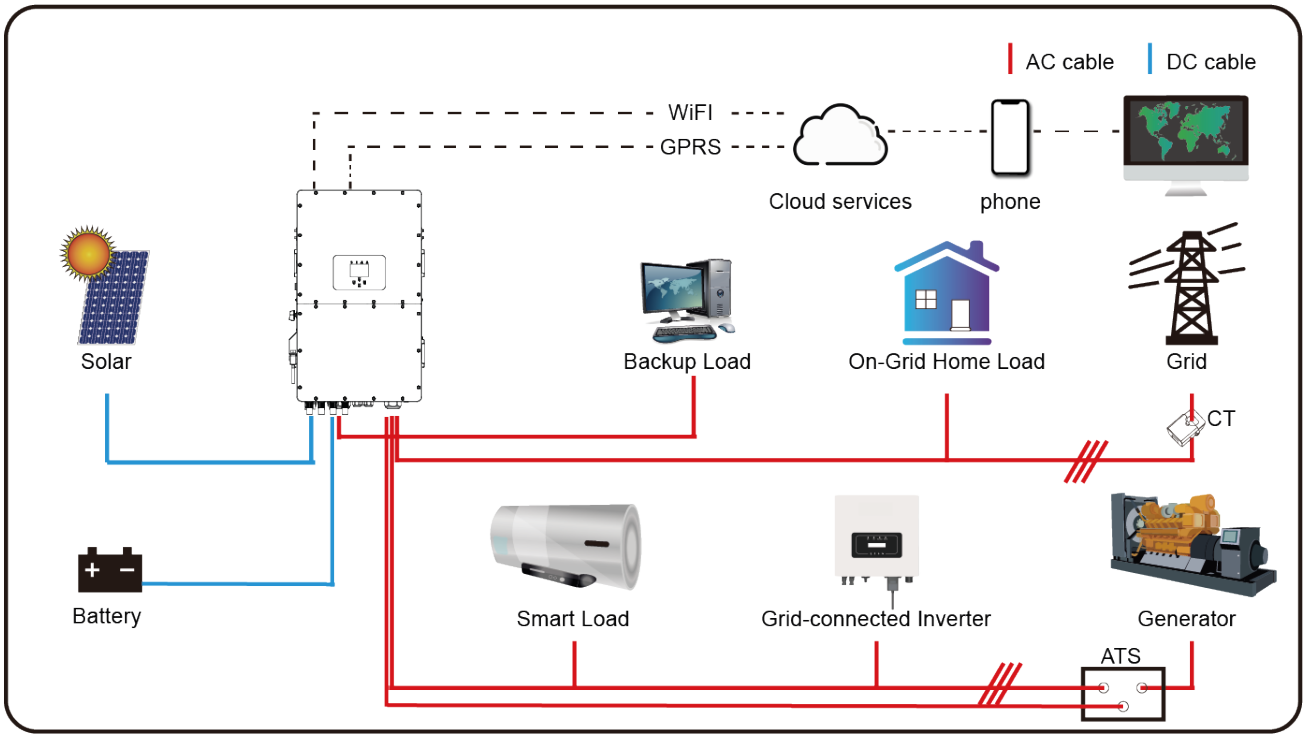

3. TECHNICAL SPECIFICATIONS

Model	SUN-25K-SG01HP3-EU-BM2	SUN-30K-SG01HP3-EU-BM3	SUN-40K-SG01HP3-EU-BM4	SUN-50K-SG01HP3-EU-BM4
Battery Input Date				
Battery Type	Li-Ion			
Battery Voltage Range	160V~800V			
Max. Charging Current	50A+50A			
Max. Discharging Current	50A+50A			
Number of battery input	2			
Charging Strategy for Li-Ion Battery	Self-adaption to BMS			
PV String Input Data				
Max. DC Input Power(W)	32500	39000	52000	65000
Max. DC Input Voltage (V)	1000			
Start-up Voltage(V)	180			
MPPT Range(V)	150-850			
Full Load DC Voltage Range (V)	450-850	360-850	360-850	450-850
Rated DC Input Voltage (V)	600			
PV Input Current(A)	36+36	36+36+36	36+36+36+36	
Max.PV Isc(A)	55+55	55+55+55	55+55+55+55	
No. of MPPT Trackers	2	3	4	
No. of Strings Per MPPT Tracker	2+2	2+2+2	2+2+2+2	
AC Output Data				
Rated AC Output and UPS Power(W)	25000	30000	40000	50000
Max. AC Output Power(W)	27500	33000	44000	55000
Peak Power(off grid)	1.5 time of rated power, 10 S			
AC Output Rated Current(A)	37.9/36.3	45.5/43.5	60.7/58.0	75.8/72.5
Max. AC Current(A)	50	60	70	83.3
Max. Continuous AC Passthrough(A)	150			
Generator input/Smart load /AC couple current (A)	37.9/150 /37.9	45.5/150 /45.5	60.7/150 /60.7	75.8/150 /75.8
Power Factor	0.8 leading to 0.8 lagging			
Output Frequency and Voltage	50/60Hz; 3L/N/PE 220/380, 230/400Vac			
Grid Type	Three Phase			
DC injection current (mA)	<0.5%1n			
Efficiency				
Max. Efficiency	97.60%			
Euro Efficiency	97.00%			
MPPT Efficiency	>99%			
Protection				
PV Input Lightning Protection	Integrated			
Anti-islanding Protection	Integrated			
PV String Input Reverse Polarity Protection	Integrated			
Insulation Resistor Detection	Integrated			
Residual Current Monitoring Unit	Integrated			
Output Over Current Protection	Integrated			

Output Shorted Protection	Integrated
Output Over Voltage Protection	DC Type II / AC Type III
Battery Over Current Protection	Fuses
Certifications and Standards	
Grid Regulation	VDE4105,IEC61727/62116,VDE0126,AS4777.2,CEI 0 21,EN50549-1, G98,G99,C10-11,UNE217002,NBR16149/ NBR16150
EMC/Safety Regulation	IEC62109-1/-2, NBT32004-2018, EN61000-6-1,EN61000-6-2, EN61000-6-3, EN61000-6-4
General Data	
Operating Temperature Rande(ºC)	-40~60 ºC, >45 ºC Derating
Cooling	Intelligent air cooling
Noise(dB)	≤45 dB
Communication with BMS	RS485; CAN
Weight(kg)	75
Size(mm)	527W×894H×294D
Protection Degree	IP65
Installation Style	Wall-mounted
Warranty	5 years

4. INSTALLATION

4.1. Parts List

Check if you received all the items listed below. Ensure that nothing is damaged in the package.

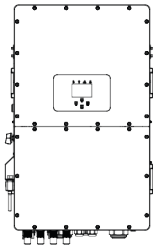

Hybrid inverter
x1

Wall mounting bracket x1

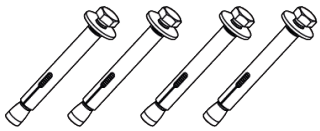

Stainless steel anti-collision bolt M12×60
x4

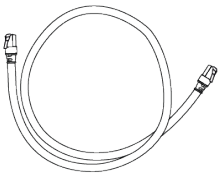

Parallel communication cable x2

L-type Hexagon wrench
x1

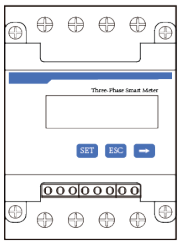

Meter(optional)
x 1

User manual x1

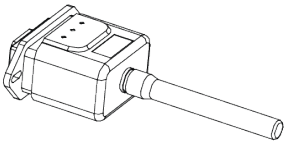

Wi-Fi-Plug x1

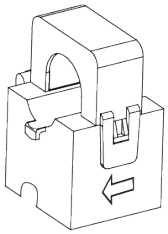

Sensor Clamp
x 3

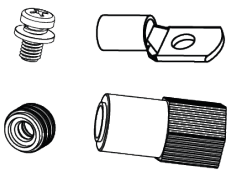

Battery Plug connectors accessories x4

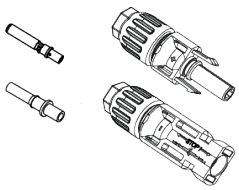

DC+/DC- Plug connectors including metal terminal
xN

T-type wrench
x1

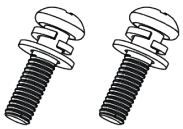

Stainless steel mounting screws M4*12 x2

4.2. Selecting the Mounting Area

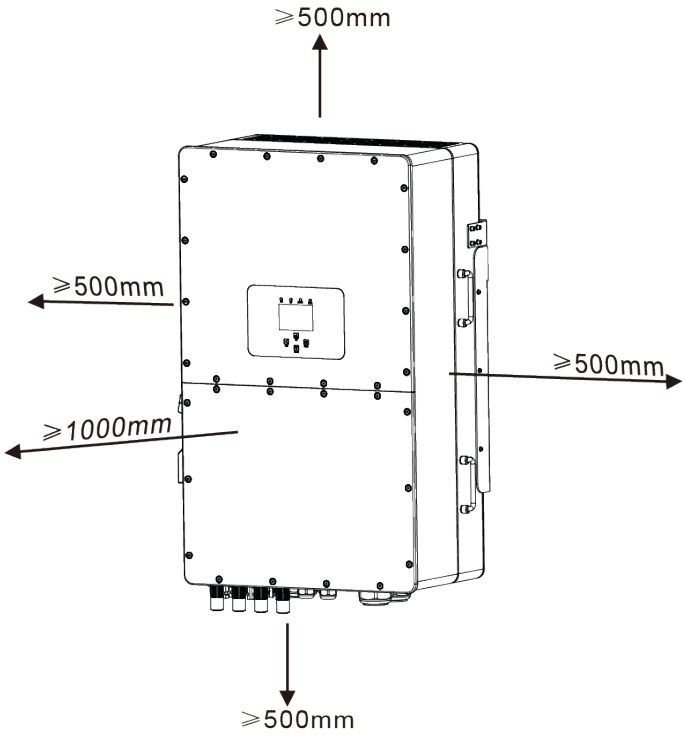

For proper heat dissipation, allow a clearance of approximately 500mm to the side, 500mm above and below the unit, and 1000mm to the front of the unit.

DO NOT install the inverter in the following areas:

- Areas with high salt content, such as the marine environment. It will deteriorate the metal parts and possibly lead to water/dampness penetrating the unit.
- Areas filled with mineral oil or containing splashed oil or steam such as found in kitchens. It will deteriorate plastic parts of the unit, causing those parts to fail or allow water/damp to penetrate the unit.
- Areas that generate substances that adversely affect the equipment, such as sulphuric gas, chlorine gas, acid, or alkali. These can cause the copper pipes and brazed joints to corrode and fail to conduct electricity reliably.
- Areas that can cause combustible gas to leak, which contains suspended carbon-fibre or flammable dust, or volatile inflammable such as paint thinner or gasoline.
- Areas where there may be gas leaks and where gas may settle around the unit as this is a fire risk.
- Areas where animals may urinate on the unit or ammonia may be generated.
- High altitude areas (over 4000 metres above sea level).
- Environments where precipitation or humidity are above 95%
- Areas where the air circulation is too low.

ALSO CONSIDER:

- Installing the indoor unit, outdoor unit, power supply cable, transmission cable, and remote control cable at least 1 metre away from any television or radio receiver. This will prevent TV reception interference or radio noise. This will prevent radio signal interference from external units that might interfere with the Wi-Fi or GSM monitoring.
- If children under 10 years old may approach the unit, take preventive measures so that they cannot reach and touch the unit.
- Install the indoor unit on the wall where the height from the floors is higher than 1600mm.

Before connecting all wires, please take the metal cover off removing the screws as shown below:

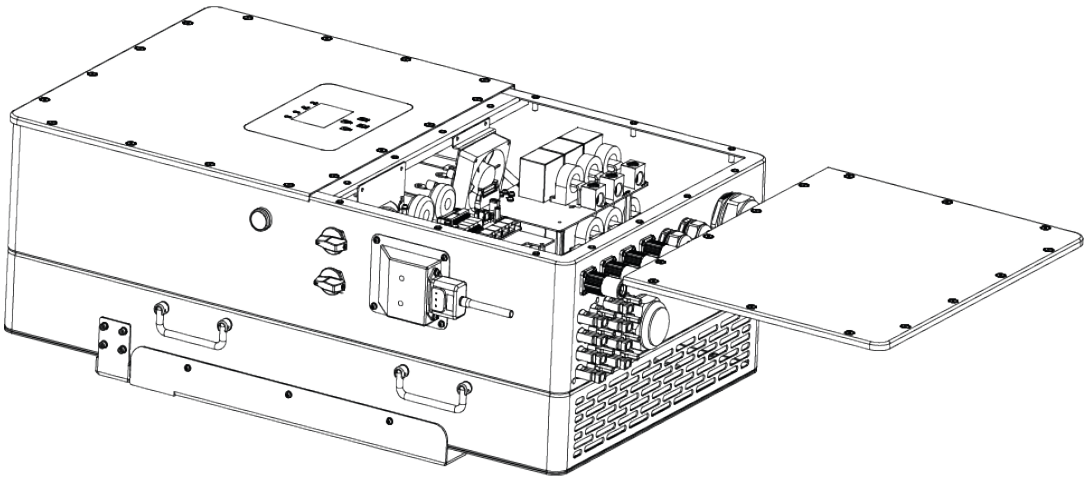

4.3. Mounting the Inverter

- Select installation locations that adequate to support the weight of the converter.
- Install this inverter at eye-level to allow the LCD to be read anytime.
- An appropriate ambient temperature is between -25 ~ 60°C to ensure optimal operation.
- Be sure to keep other objects and surfaces as shown in the figure to guarantee sufficient heat dissipation and have enough space to remove wires.
- For proper air circulation to dissipate heat, allow a clearance of approximately 50cm to the side.

⚠ WARNING

Risk of injury (Heavy Object)

Remember that this inverter is heavy (75kg) so users must be careful in handling the unit during installation especially when mounting or removing from a wall.

Choose the recommend drill head (as shown in below pic) to drill 4 holes on the wall, 52-60mm deep.

1. Use a proper hammer to fit the expansion bolt into the holes.
2. Carry the inverter and holding it, make sure the hanger aim at the expansion bolt,fix the inverter on the wall.
3. Fasten the screw head of the expansion bolt to finish the mounting.

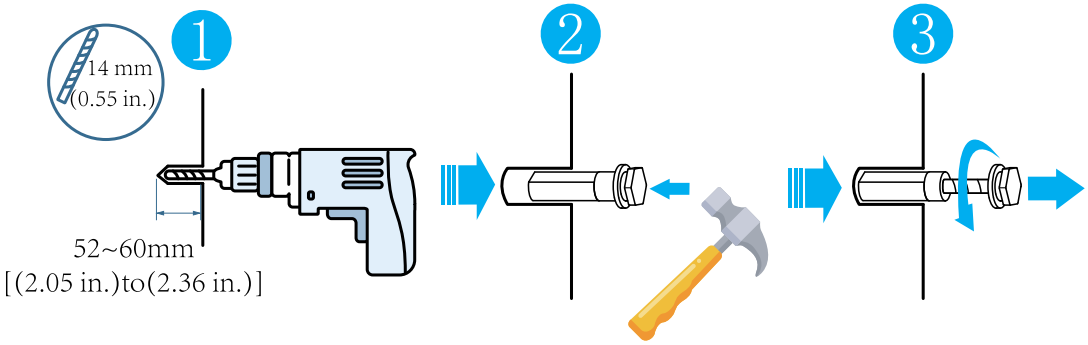

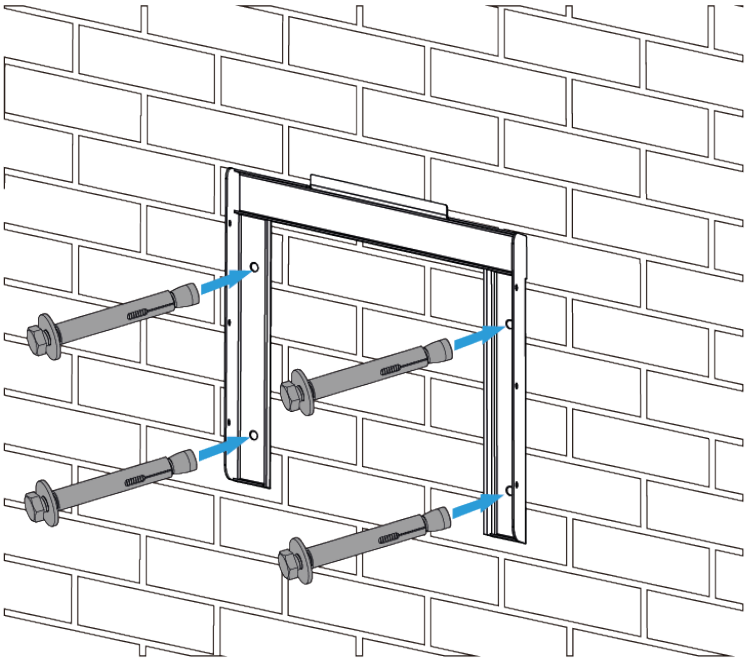

Inverter hanging plate installation

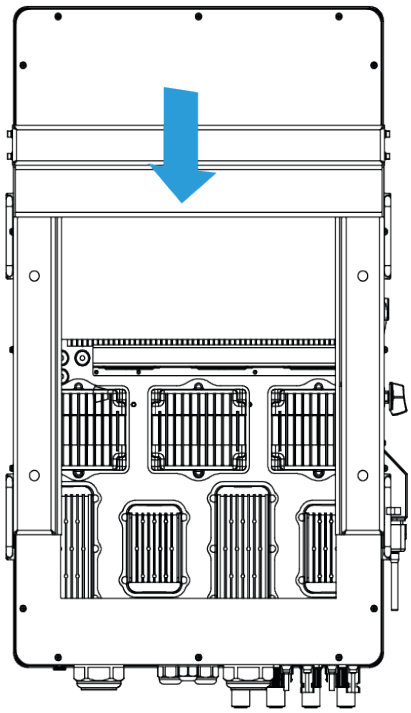

4.4. Battery Connection

For safe operation and compliance, an individual DC overcurrent protector or disconnection device is required for the connection of the battery and the inverter. Users are recommended to utilise a suitable fuse and DC isolator (see next page). In some applications, switching devices may not be required, but overcurrent protectors must be used. Please refer to the typical amperage in the table below for the required fuse or circuit breaker size.

⚠ CAUTION

Reverse Polarity

All wiring/connecting must be performed by qualified personnel. Before making the final DC connection or closing the DC Breaker/disconnection device, ensure the inverter unit is wired correctly. A reverse-polarity connection on the battery will damage the inverter.

Model	Cross section (mm^2)	
	Range	Recommended value
25/30/40/50KW	16.0~25.0 (6~4AWG)	16.0(6AWG))

Please follow below steps to implement battery connection:

1. Pass the cable through the terminal:

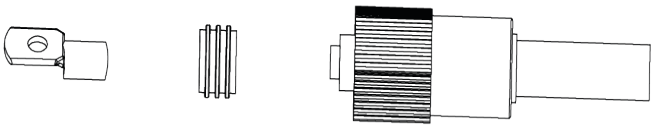

2. Put on the rubber ring:

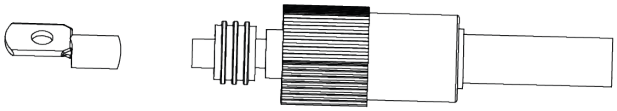

3. Crimp terminals:

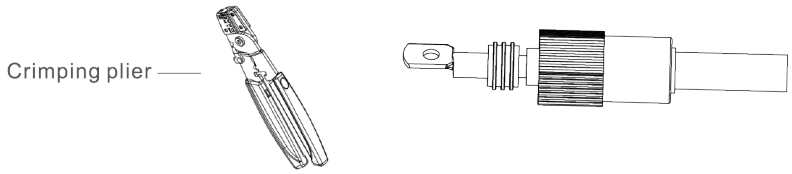

4. Fasten terminal with a bolt:

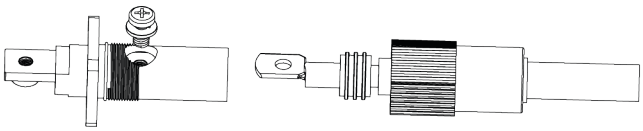

5. Fasten the terminal with outer cover:

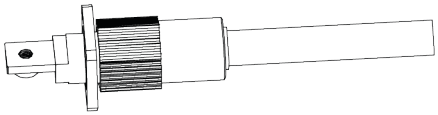

NOTICE

Depending on the battery type, the inverter should be capable of controlling the batteries BMS. Therefore, you need to set the protocol of the BMS on both the battery and the inverter.

When using more than one battery, the first battery will be the master, and the other batteries will be the slaves. Please, check the battery manufacturer specification for proper operation.

To verify if the battery is actually communicating access the Li BMS menu as detailed in section 4.13 'Setting Up a Lithium Battery' and check whether the values are realistic or not. It is important that the charge and discharge limits in that page match the numbers expected for the number of batteries physically connected.

4.4.1. Function Ports Definition

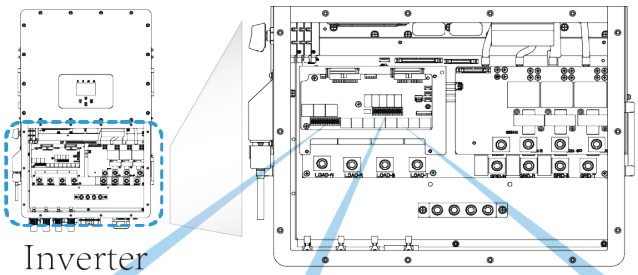

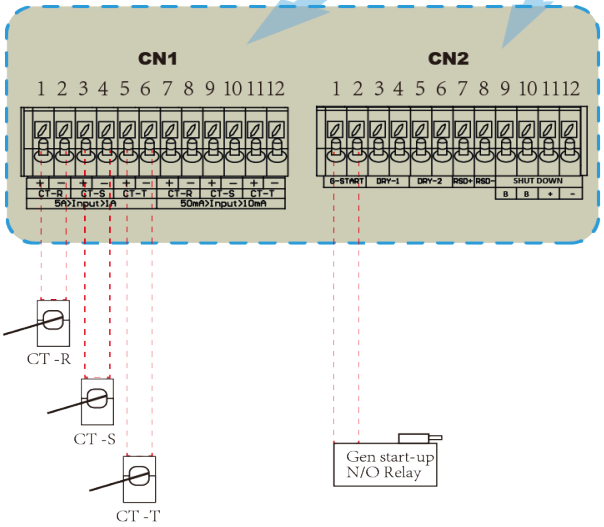

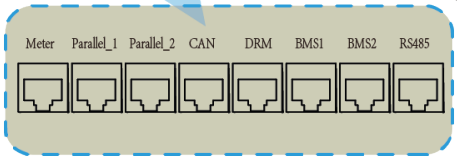

Meter: for energy meter communication.
Parallel_1: Parallel communication port 1.
Parallel_2: Parallel communication port 2 .
CAN: reserved.
DRM: Logic interface for AS/NZS 4777.2:2020.
BMS1: BMS port for battery communication port 1.
BMS2: BMS port for battery communication port 2.
RS485: RS485 port.

CN1:
CT-R (1,2,7,8): current transformer (CT-R) for“zero export to CT”mode clamps on L1 when in three phase system.
CT-S (3,4,9,10): current transformer (CT-S) for“zero export to CT”mode clamps on L2 when in three phase system.
CT-T (5,6,11,12): current transformer (CT-T) for“zero export to CT”mode clamps on L3 when in three phase system.

CN2:
G-start (1,2): dry contact signal for startup the diesel generator.
When the "GEN signal" is active, the open contact (GS) will switch on (no voltage output).
DRY-1 (3,4): reserved.
DRY-2 (5,6): reserved.
RSD (7,8): When battery is connected and the inverter is in "ON" status, it will provide 12Vdc.

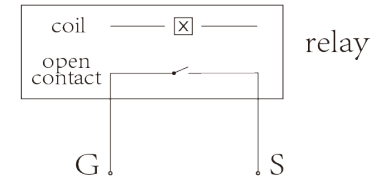

GS (diesel generator startup signal)

4.5. Grid connection and backup load connection

Before connecting to grid, please install a separate AC breaker between inverter and grid. Also, it is recommended that installs an AC breaker between backup load and inverter.This will ensure the inverter can be securely disconnected during maintenance and fully protected from over current. For the 25/30/40/50KW model, the recommended AC breaker for backup load is 180A. For the 25/30/40/50KW model, the recommended AC breaker for grid is 180A.

There are three terminal blocks with "Grid" "Load"and "GEN" markings. Please do not misconnect input and output connectors.

Backup Load Connection

Cable type	Cross section (mm^2)	
	Range	Recommended value
Industry generic PV cable (model: PV1-F)	70~95 (2/0~3/0AWG)	70(2/0AWG)

Grid Connection

Cable type	Cross section (mm^2)	
	Range	Recommended value
Industry generic PV cable (model: PV1-F)	70~95 (2/0~3/0AWG)	70(2/0AWG)

⚠ CAUTION

All wiring must be performed by a qualified personnel.It is very important for system safety and efficient operation to use appropriate cable for AC input connection. To reduce risk of injury, please use the proper recommended cable as below.

Please follow the steps below to implement GRID, LOAD, and GEN port connections:

1. Before making GRID, LOAD, and GEN port connections, make sure to turn off the AC breaker or disconnector first.
2. Remove insulation sleeve 10mm length, insert the wires according to polarities indicated on the terminal block. Make sure the connection is complete.Then, insert AC output wires according to polarities indicated on the terminal block and tighten the terminal. Make sure to connect corresponding N wires and PE wires to related terminals as well.
3. Then, insert AC output wires according to polarities indicated on the terminal block and tighten terminal. Be sure to connect corresponding N wires and PE wires to related terminals as well.
4. Make sure the wires are securely connected.

5. Appliances such as air conditioner are required at least 2-3 minutes to restart because it is required to have enough time to balance refrigerant gas inside of circuit. If a power shortage occurs and recovers in short time, it will cause damage to your connected appliances. To prevent this kind of damage, please check manufacturer of air conditioner if it is equipped with time-delay function before installation. Otherwise, this inverter will trigger overload fault and cut off output to protect your appliance but sometimes it still causes internal damage to the air conditioner

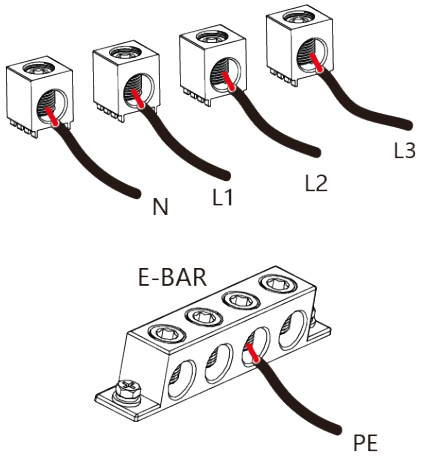

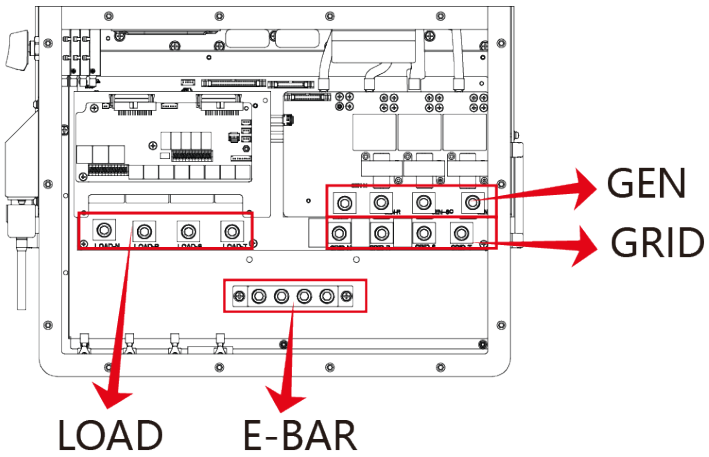

⚠ CAUTION

Be sure that AC power source is disconnected before attempting to wire it to the unit.

4.6. PV Connection

Before connecting to PV panels, install a separate DC circuit breaker between the inverter and PV modules. In addition, we request users install PV junction box with surge protection to protect the system from lightning strike.

In order to reduce risk of injury, please use the recommended cable sizes as shown below:

⚠ CAUTION

To avoid any malfunction, do not connect any PV modules with possible leakage current to the inverter. For example, grounded PV modules will cause leakage current to the inverter. When using PV modules, please ensure the PV+ & PV- of solar panel is not connected to the system ground bar.

It is requested to use PV junction box with surge protection. Otherwise, it will cause damage on inverter when lightning occurs on PV modules.

4.6.1. PV Module Selection

When selecting proper PV modules, please be sure to consider below parameters:

1. Open circuit Voltage (Voc) of PV modules can not exceed max. PV array open circuit voltage of inverter.
2. Open circuit Voltage (Voc) of PV modules should be higher than min. start voltage.
3. The PV modules used to connected to this inverter shall be Class A rating certified according to IEC 61730.

Inverter Model	25kW	30kW	40kW	50kW
PV Input Voltage	600V (180V~1000V)			
PV Array MPPT Voltage Range	150V-850V			
No. of MPP Trackers	2	3	4	
No. of Strings per MPP Tracker	2+2	2+2+2	2+2+2+2	

4.6.2. PV Module Wiring

1. Switch the Grid Supply Main Switch (AC) OFF.
2. Switch the DC isolator OFF.
3. Assemble PV input connector to the inverter.

⚠ CAUTION

Before connection, please ensure the polarity of the output voltage of PV array matched the DC+ and DC- symbols.

⚠ WARNING

Please do not connect the PV array positive and negative pole to the gound. This can seriously damage the inverter.

Before connecting the inverter, please make sure the PV array open-circuit voltage is within the maximum limit of the inverter.

Please utilise an approved DC cable for PV system.

Cable type	Cross section (mm²)	
	Range	Recommended value
Industry generic PV cable (model: PV1-F)	2.5~4 (12~10AWG)	2.5(12AWG)

The correct steps in assembling the DC connector are explained below:

1. Strip 7mm of the plastic coating off the DC wire and disassemble the connector cap nut.

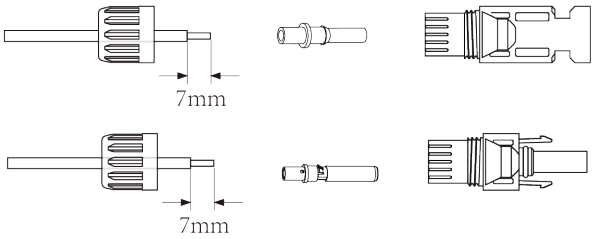

2. Crimp metal terminals with crimping pliers.

3. Insert the contact pin into the connector housing until it locks into place. Then screw the cap nut onto the connector housing. Torque to 2.5-3 N.m

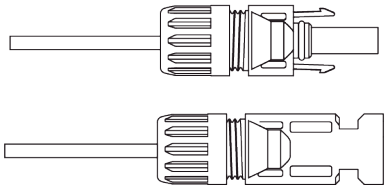

4. Finally, insert the DC connector into the positive and negative input of the inverter.

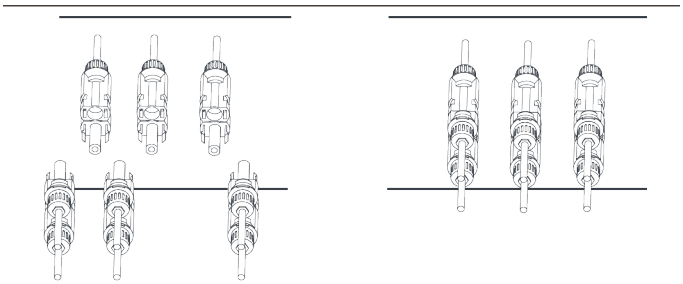

NOTICE

When sunlight falls on the solar panel, it will generate a voltage. A high voltage generated by panels in series configuration may cause danger to life. Therefore, before connecting the DC-Input line, the solar panel's surface should be shielded from the sun's rays by some opaque material and the DC switch should be off. This will prevent a high voltage flowing to the inverter thereby causing risk to persons conducting installation or maintenance.

4.7. Connecting the CT Coil

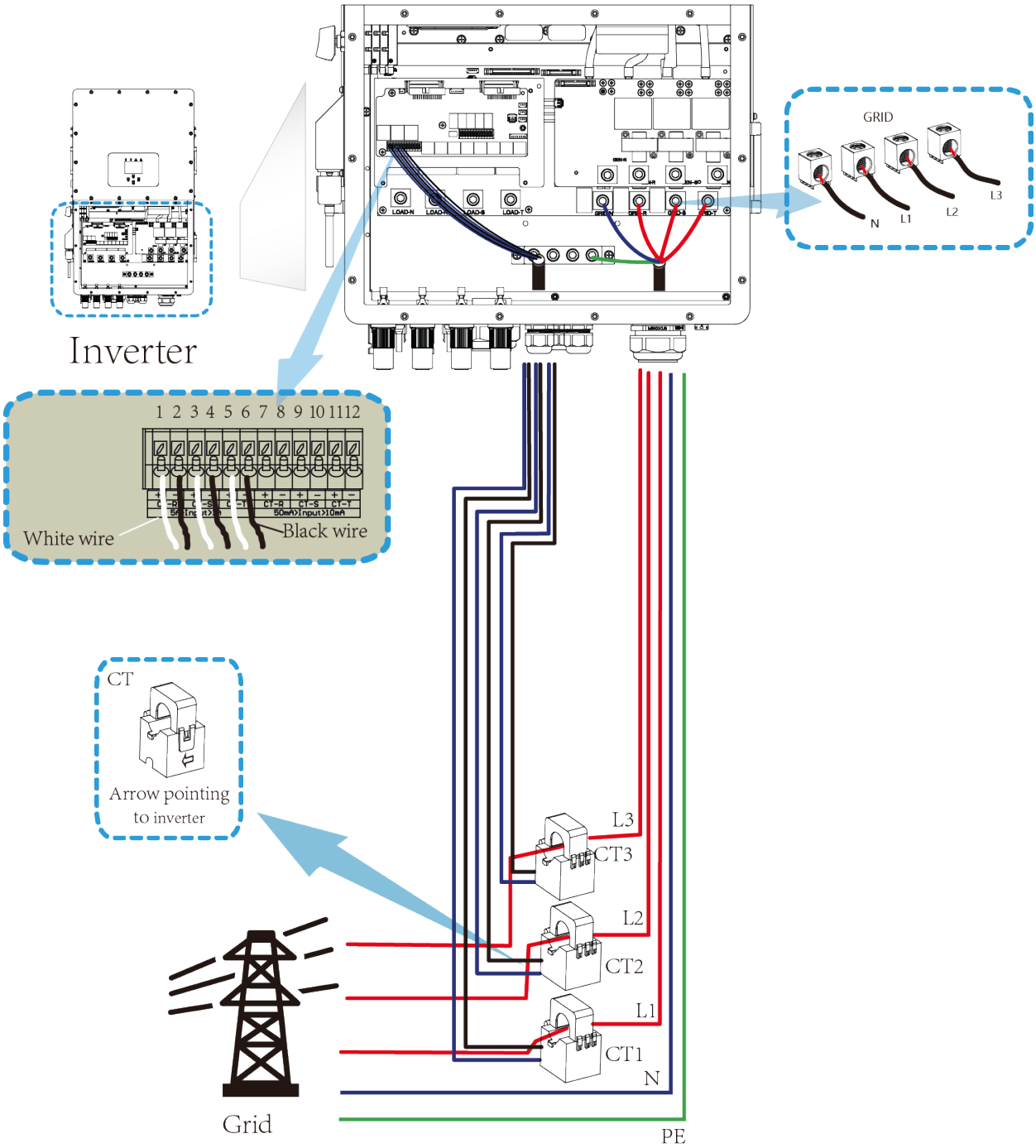

NOTICE

When the inverter is in the off-grid state, the N line needs to be connected to the earth.

4.7.1. System Connection for the CHNT Meter

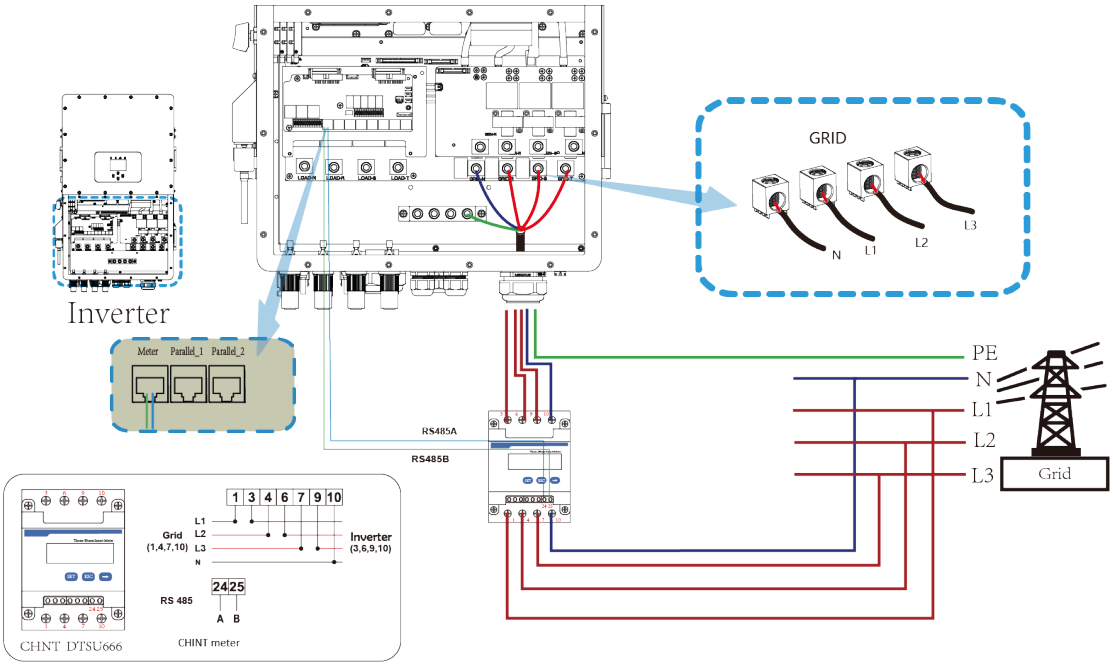

4.7.2. System Connection for the Eastron Meter

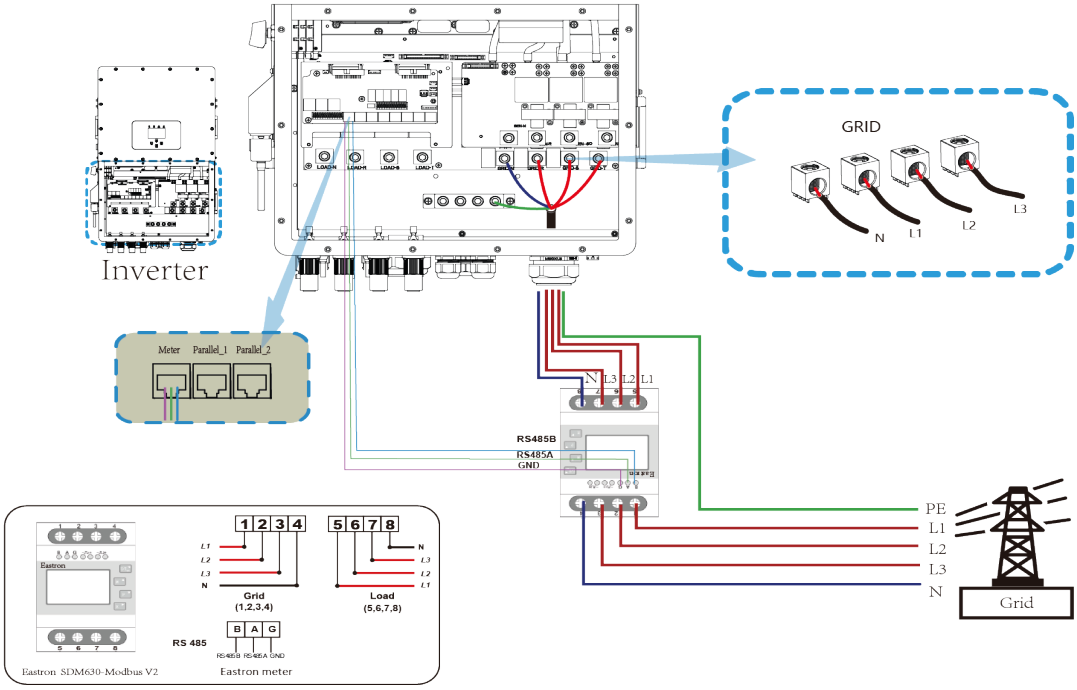

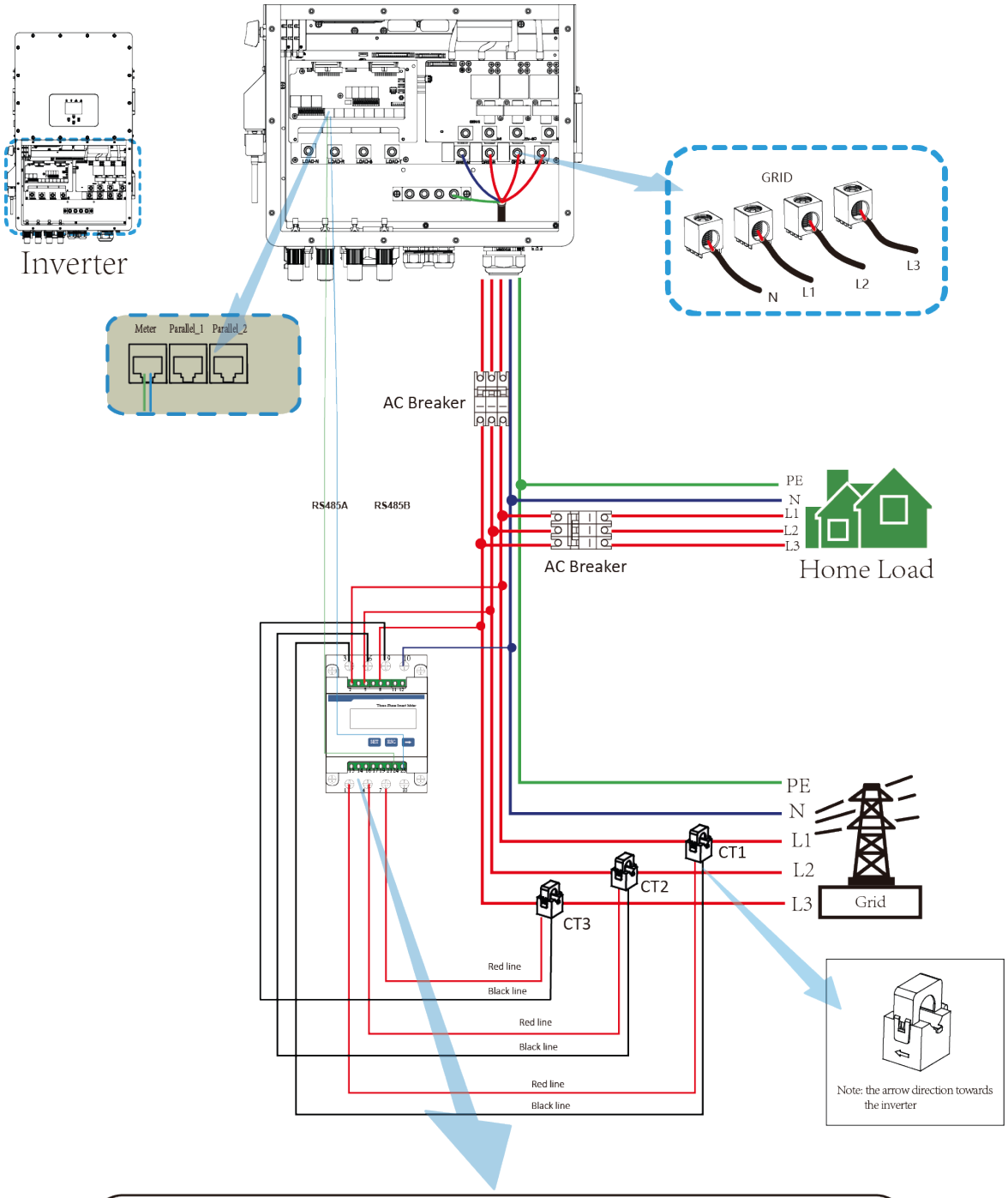
Inverter
GRID
N
L1
L2
L3
Meter
Parallel_1
Parallel_2
AC Breaker
RS485A
RS485B
PE
N
L1
L2
L3
AC Breaker
Home Load
PE
N
L1
L2
L3
Grid
CT1
CT2
CT3
Red line
Black line
Red line
Black line
Red line
Black line
Note: the arrow direction towards the inverter

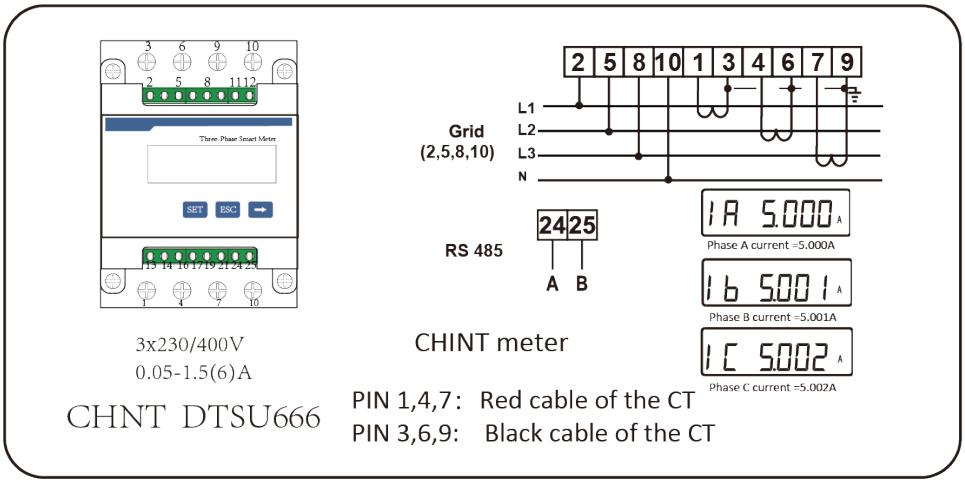
3x230/400V
0.05-1.5(6)A
CHNT DTSU666
Grid
(2,5,8,10)
L1
L2
L3
N
RS 485
A B
Phase A current =5.000A
Phase B current =5.001A
Phase C current =5.002A
CHINT meter
PIN 1,4,7: Red cable of the CT
PIN 3,6,9: Black cable of the CT

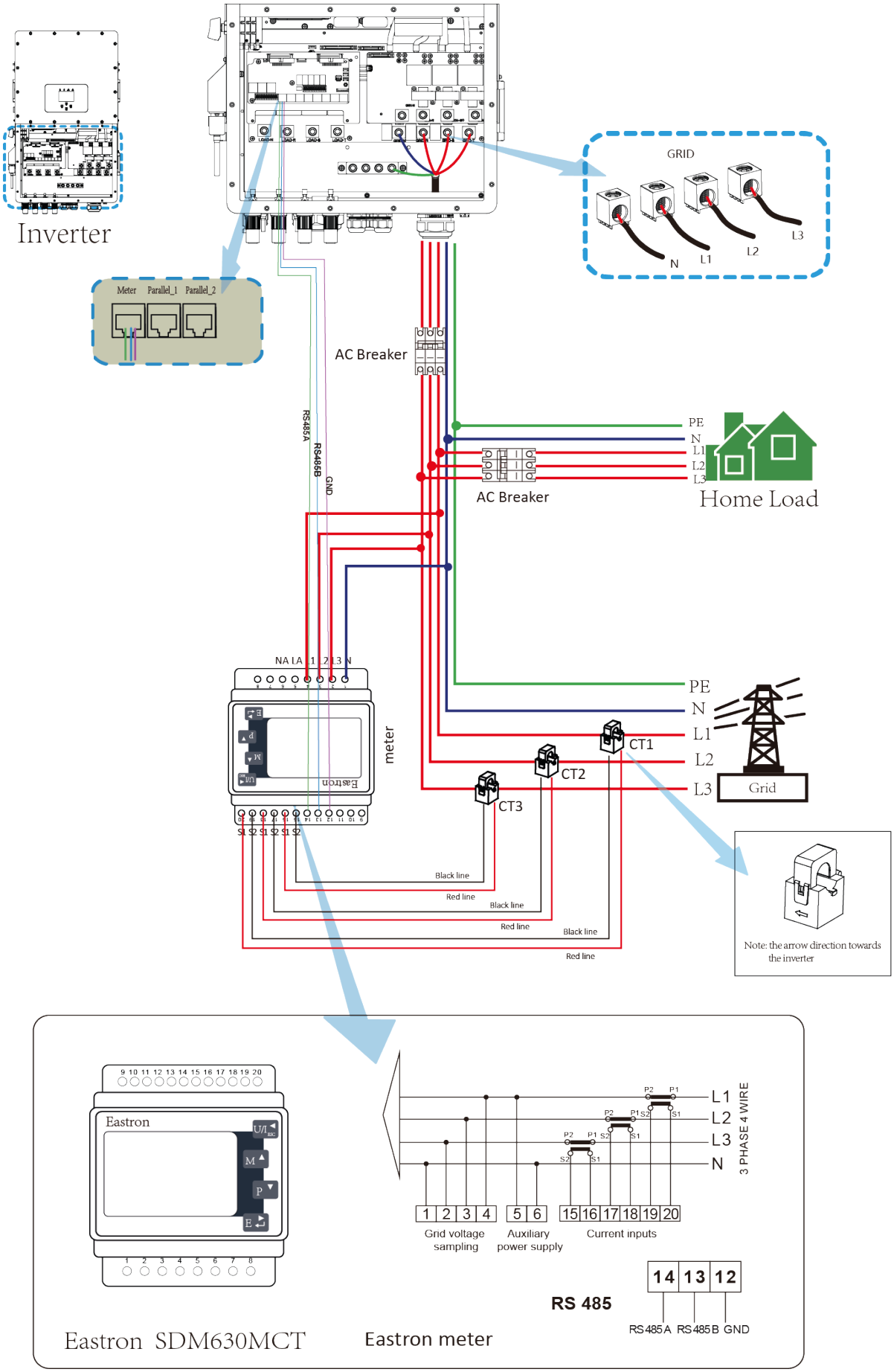
Inverter
GRID
N
L1
L2
L3
Meter
Parallel_1
Parallel_2
AC Breaker
RS485A
RS485B
GND
PE
N
L1
L2
L3
AC Breaker
Home Load
NA IA 1 2 L3 N
meter
Eastron
CT1
CT2
CT3
PE
N
L1
L2
L3
Grid
S1 S2 S1 S2 S1 S2
Black line
Red line
Black line
Red line
Black line
Red line
Note: the arrow direction towards the inverter
9 10 11 12 13 14 15 16 17 18 19 20
Eastron
U/I
M
P
E
1 2 3 4 5 6 7 8
P2 P1
S2 S1
L1
L2
L3
N
3 PHASE 4 WIRE
1 2 3 4
Grid voltage sampling
5 6
Auxiliary power supply
15 16 17 18 19 20
Current inputs
RS 485
14 13 12
RS485A RS485B GND
Eastron SDM630MCT
Eastron meter

NOTICE

When the inverter is in the off-grid state, the N line needs to be connected to the earth.

In final installation,breaker certified according to IEC 60947-1 and IEC 60947-2 shall be installed with the equipment.

4.8. Earth Connection (MANDATORY)

Ground cable shall be connected to ground plate on grid side this prevents electric shock if the original protective conductor fails.

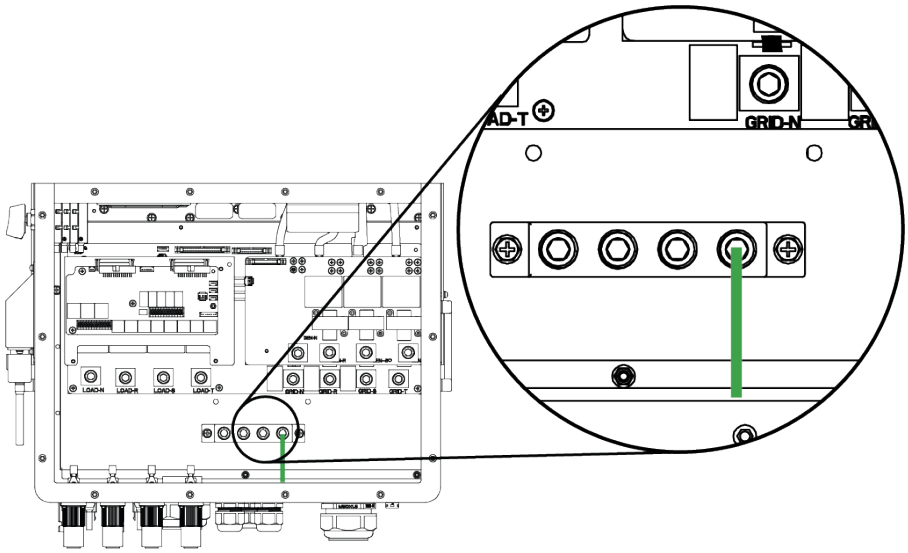

4.9. WIFI Connection

For the configuration of Wi-Fi Plug, please refer to illustrations of the Wi-Fi Plug.

4.10. Wiring System for Inverter

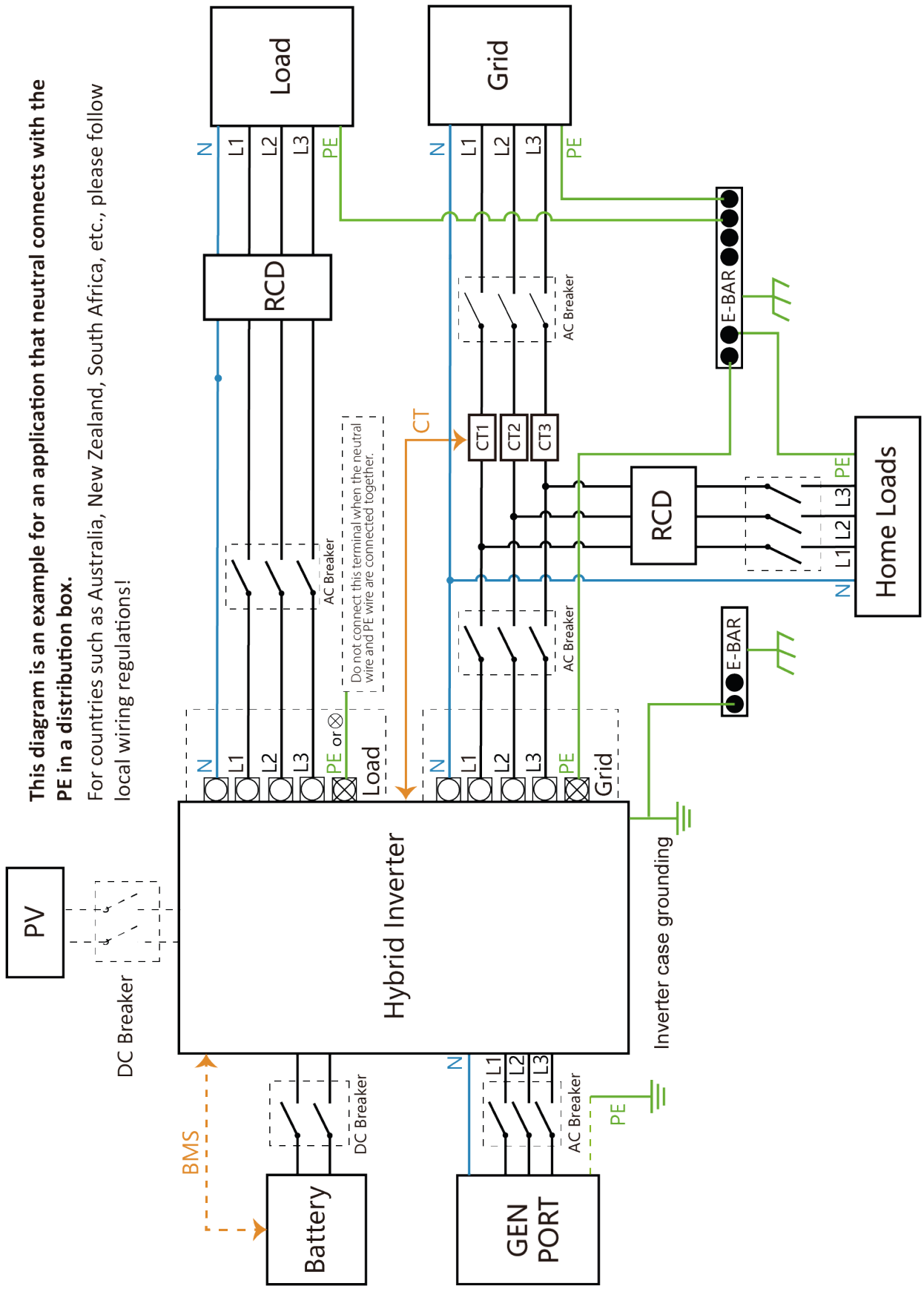

4.11. Wiring Diagram

This diagram is an example for an application in which neutral is separated from the PE in the distribution box.

For countries such as China, Germany,the Czech Republic, Italy, etc., please follow local wiring reguations!

Note:Backup function is optional in German market.please leave backup side empty if backup function is not available in the inverter.

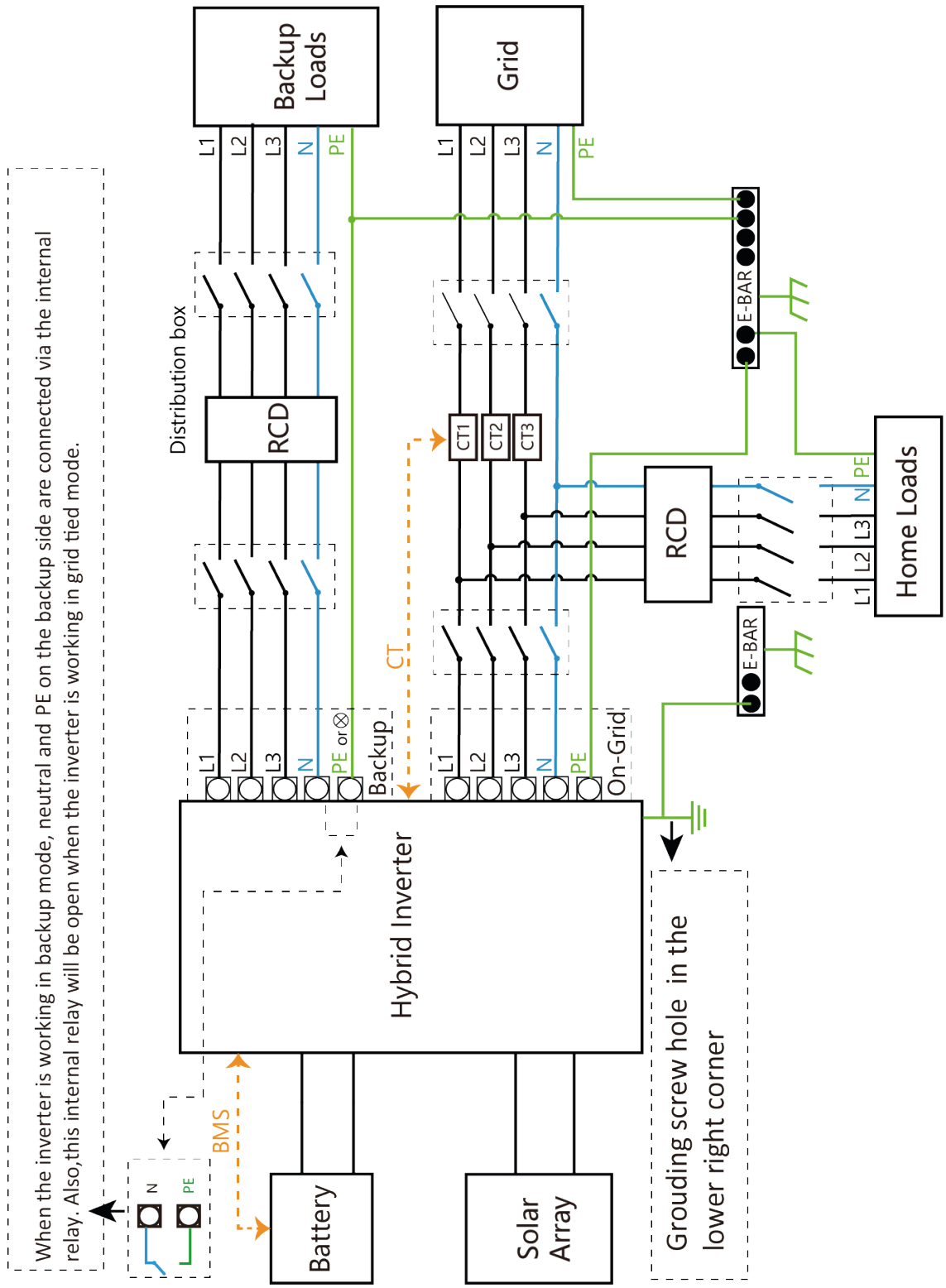

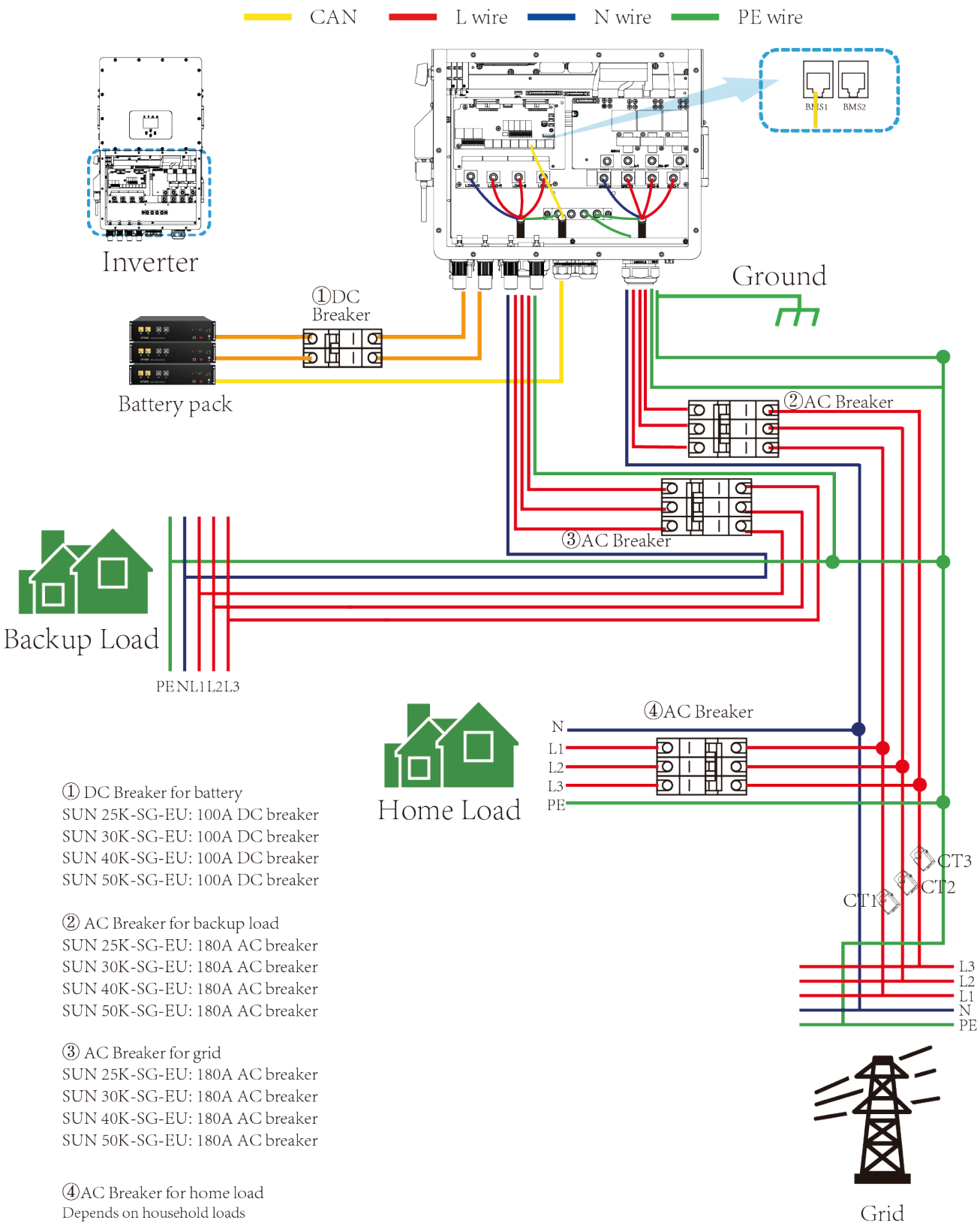

① DC Breaker for battery
SUN 25K-SG-EU: 100A DC breaker
SUN 30K-SG-EU: 100A DC breaker
SUN 40K-SG-EU: 100A DC breaker
SUN 50K-SG-EU: 100A DC breaker

② AC Breaker for backup load
SUN 25K-SG-EU: 180A AC breaker
SUN 30K-SG-EU: 180A AC breaker
SUN 40K-SG-EU: 180A AC breaker
SUN 50K-SG-EU: 180A AC breaker

③ AC Breaker for grid
SUN 25K-SG-EU: 180A AC breaker
SUN 30K-SG-EU: 180A AC breaker
SUN 40K-SG-EU: 180A AC breaker
SUN 50K-SG-EU: 180A AC breaker

④AC Breaker for home load
Depends on household loads

4.12. Typical Application Diagram of Diesel Generator

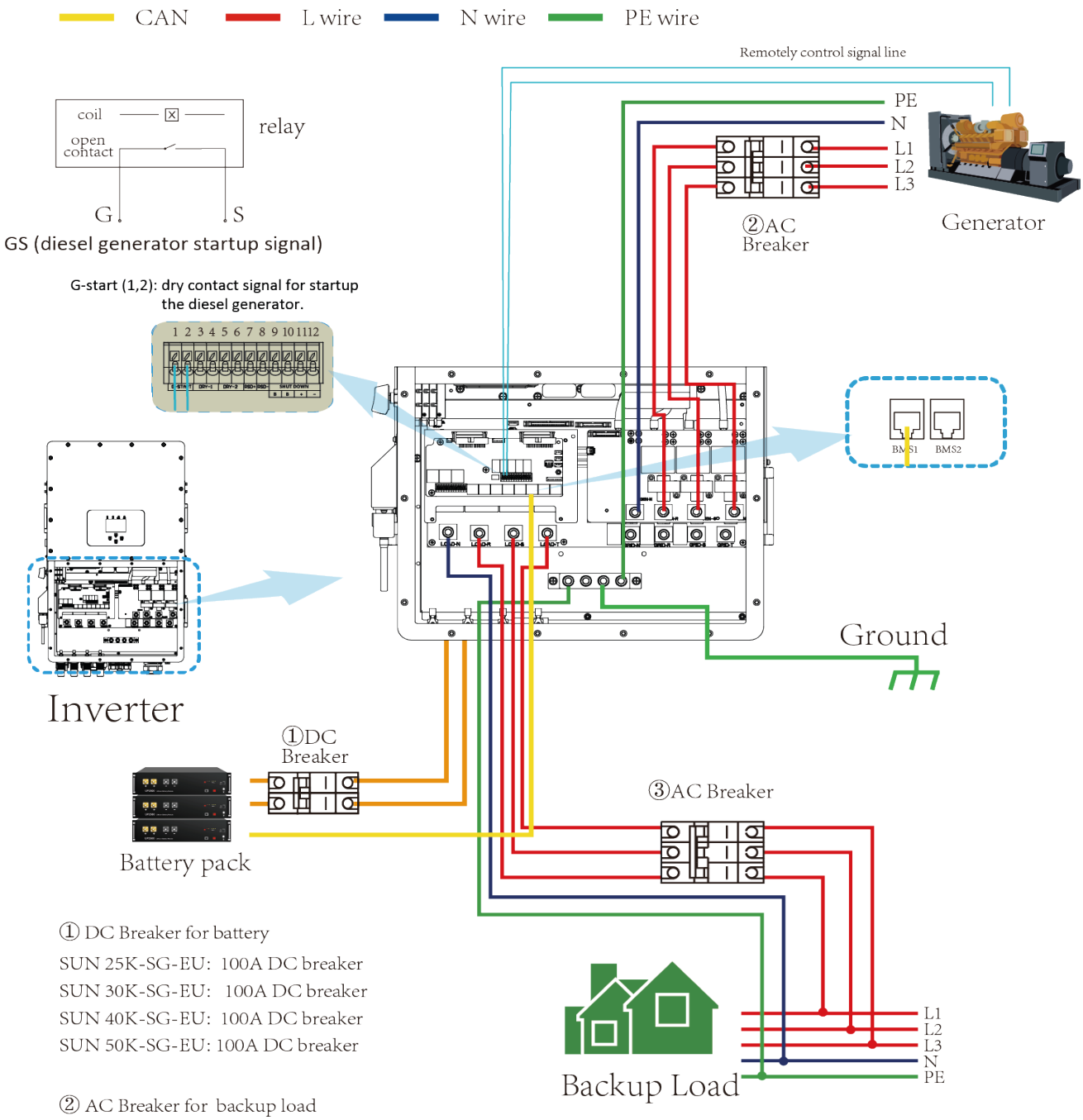

① DC Breaker for battery

SUN 25K-SG-EU: 100A DC breaker
SUN 30K-SG-EU: 100A DC breaker
SUN 40K-SG-EU: 100A DC breaker
SUN 50K-SG-EU: 100A DC breaker

② AC Breaker for backup load

SUN 25K-SG-EU: 180A AC breaker
SUN 30K-SG-EU: 180A AC breaker
SUN 40K-SG-EU: 180A AC breaker
SUN 50K-SG-EU: 180A AC breaker

③ AC Breaker for Generator port

SUN 25K-SG-EU: 180A AC breaker
SUN 30K-SG-EU: 180A AC breaker
SUN 40K-SG-EU: 180A AC breaker
SUN 50K-SG-EU: 180A AC breaker

4.13. Three Phase Parallel Connection Diagram

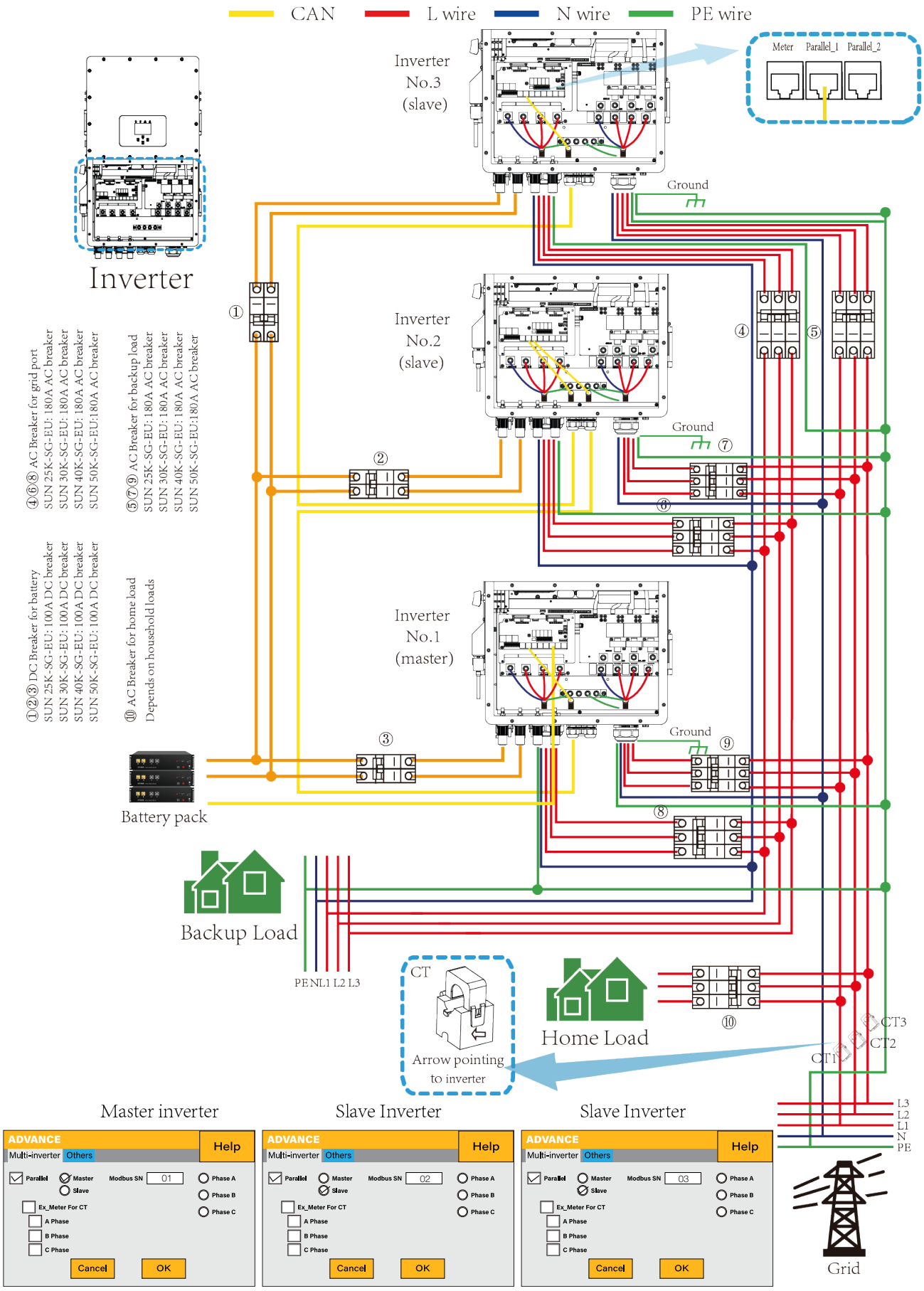

5. OPERATION

5.1. Display

LED indicator		Meaning
DC	Green LED solid light	PV connection normal
AC	Green LED solid light	Grid connection normal
Normal	Green LED solid light	Inverter functioning normally
Alarm	Red LED solid light	Fault

Function Key	Description
Esc	To exit the previous mode
Up	Increase the value of a setting
Down	Decrease the value of a setting
Enter	Confirm setting change (If not pressed each time the setting will not be saved)

5.2. Switching ON/OFF

Once the inverter has been correctly installed and the batteries have been connected, press the ON/OFF button (located on the left side of the case) to activate the system.

When the system is connected without a battery but connected with either PV or grid and the ON/OFF button is switched off, the LCD will still illuminate (display will show off). In this condition, when switching on the ON/OFF button and selecting 'No Battery', the system can still work.

5.3. Home Page

Press the Esc button any page to access the home page:

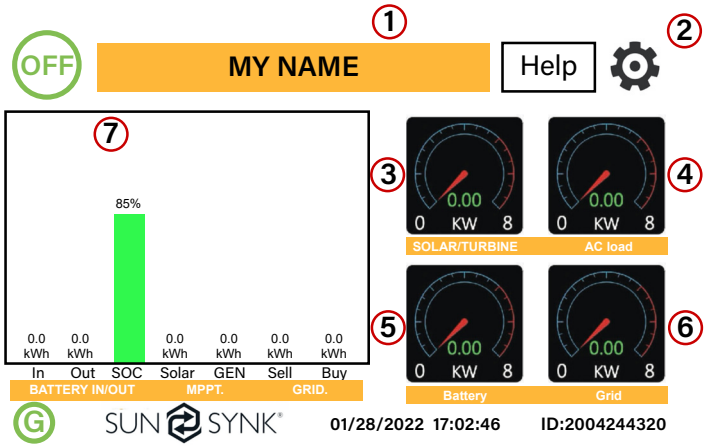

1. Customer name
2. Access settings menu page
3. Access solar history
4. Access system status page
5. Access system status page
6. Access grid history
7. Access system flow page

What this page displays:

- Total daily power into the battery (kWh).
- Total daily power out of the battery (kWh).
- SOC (State of charge of the battery) (%).
- Total daily solar power produced in (kWh).
- Total hourly usage of the generator (Time).
- Total daily power sold to the grid (kWh).
- Total daily power bought from the grid (kWh).
- Real-time solar power in (kW).
- Real-time load power in (kW).
- Real-time battery charge power in (kW).
- Real-time grid power in (kW).
- Serial number.
- Time date.
- Fault condition.
- Access stats pages.
- Access status page.
- Access fault diagnostic page.

5.4. Status Page

To access the Status page, click on the BATTERY or AC LOAD dial on the Home page.

What this page displays:

- Total solar power produced.
- MPPT 1 power/voltage/current.
- MPPT 2 power/voltage/current.
- Grid power.
- Grid frequency.
- Grid voltage.
- Grid current.
- Inverter power.
- Inverter frequency.
- Inverter voltage.
- Inverter current.
- Load power.
- Load voltage.
- Battery power charge/discharge.
- Battery SOC.
- Battery voltage.
- Battery current.
- Battery temperature.

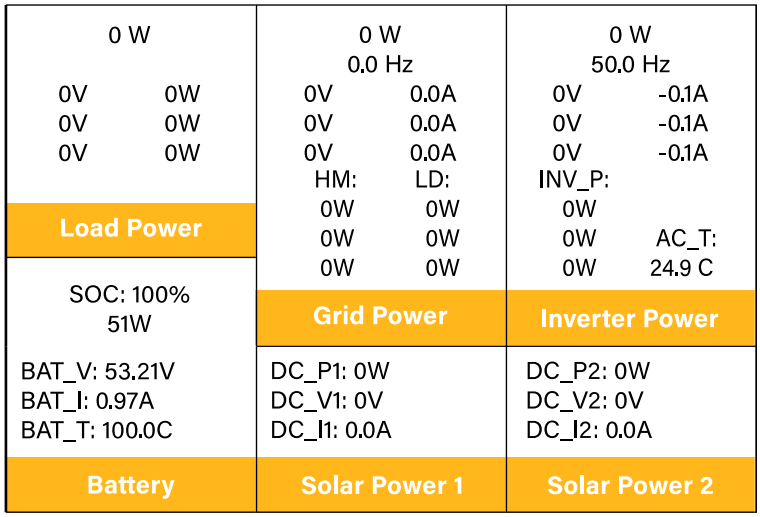

Solar Column: Shows total PV (Solar) power at the top and then details of each of the two MPPT's below L1 & L2 voltage.

Grid Column: Shows grid total power, frequency, voltage, and current. When selling power to grid the power is negative. When consuming from the grid the power is positive. If the sign of the grid and HM (home) powers are not the same when the PV is disconnected and the inverter is only taking energy from the grid and using the CT connected to Limit-2, then please reverse the polarity of the CT coil. **Important**: See Section 4.7 ('Connecting the CT coil').

Inverter Column: Showing inverter total power, frequency, L1, L2, voltage, current, and power.

Load Column: Showing total load power, load voltage, and power on L1 and L2.

Battery Column: Showing total power from the battery, battery SOC, battery voltage, battery current (negative means charge, positive means discharge) battery temperature (shows zero if the battery temperature sensor is not connected). DC transformer temperature and AC heat-sink temperature (When the temperature reaches 90°C it will display in red and the performance of the inverter will start deteriorating when it reaches 110°C. Subsequently, the inverter will shut down to allow it to cool and reduce its temperature.

5.5. System Flow Page

Access by clicking on the bar chart on the Home Page.

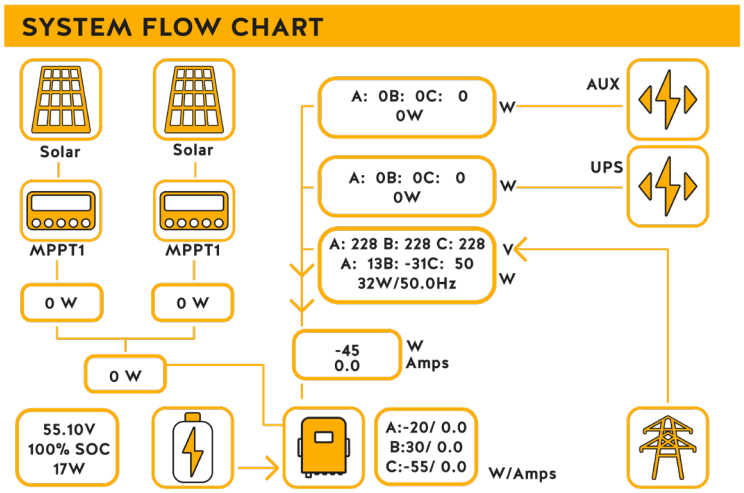

What this page displays:

- The system flow.
- MPPTs power.
- Battery status.
- Power distribution to load or grid.

To better understand the functioning of your system, take a look at the figure bellow:

1. The PV modules charge the batteries.
2. When the batteries reach a specific level (programmable) the battery power is fed into the inverter.
3. The inverter can then supply power to the grid (export or no export), load, and auxiliary or smart load.
4. CT coil controls the export power.

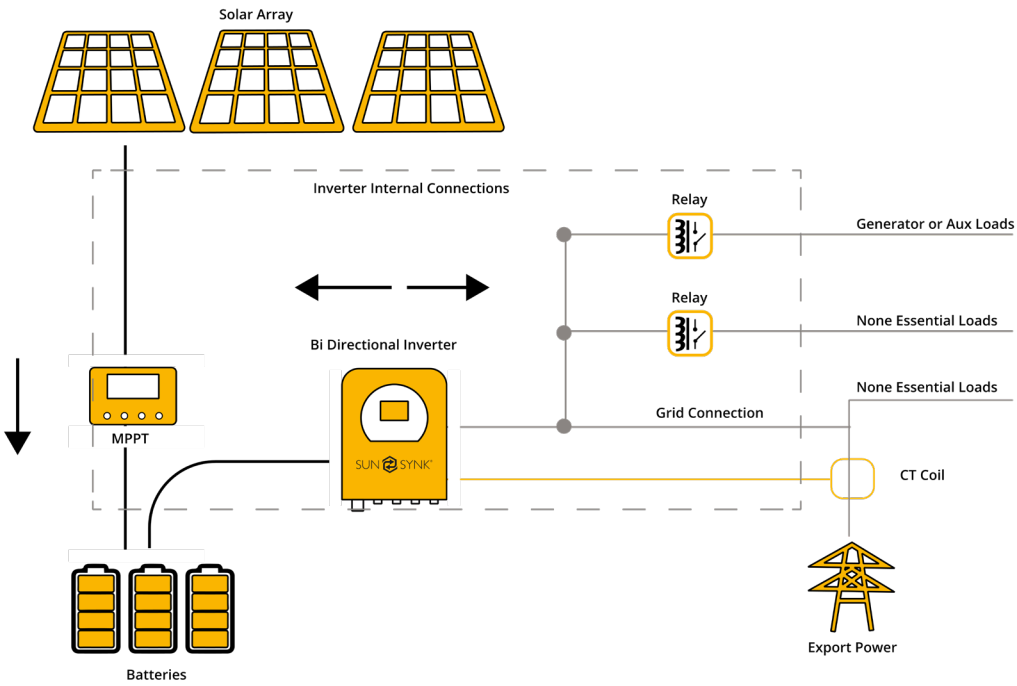

5.6. Setup Page

To access the Settings, click on the gear icon on the right top of the navigation menu. 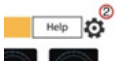

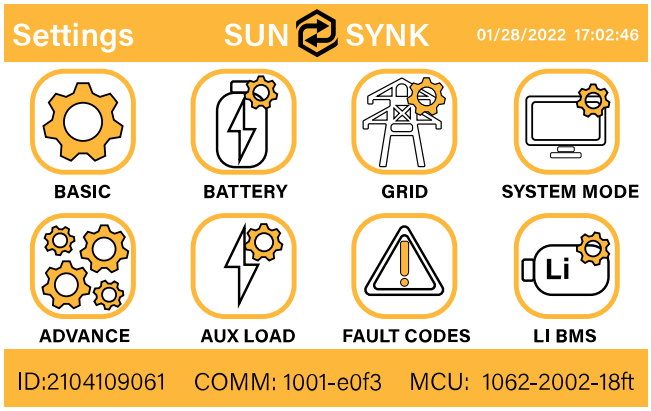

What this page displays:

- Serial number.
- Software version.
- Time, Date, and MCU.

What you can do from this page:

- Access the Basic Setup Page (press the BASIC icon).
- Access the Battery Setup Page (press the BATTERY icon).
- Access the Grid Setup Page (press the GRID icon).
- Access the real-time programmable timer/system mode (press the SYSTEM MODE icon).
- Access the advanced settings such as Wind Turbine (press the ADVANCE icon).
- Access the auxiliary load/smart load settings (press the AUX LOAD icon)
- Access the fault code register (press the FAULT CODES icon).
- Set up Li BMS (press the LI BMS icon).

5.7. Set Time (Clock)

To set time, click on the BASIC icon and then on 'Time'

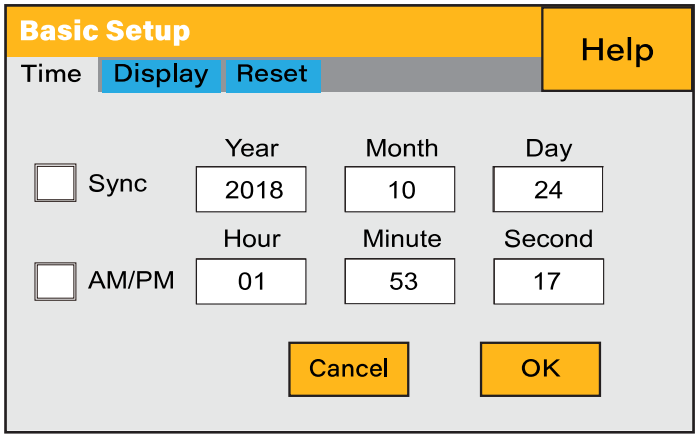

What this page displays:

- Time.
- Date.
- AM/PM.

What you can do from this page:

- Adjust / set time.
- Adjust / set date.
- Adjust / set AM/PM.

How to set up (step-by-step):

1. Touch the screen on the box you wish to change.
2. Change the number (increase/decrease) using the UP and DOWN buttons.
3. Press OK to set the changes

5.8. Set Company Name / Beeper / Auto dim

To set company name click on the BASIC icon and then on 'Display'.

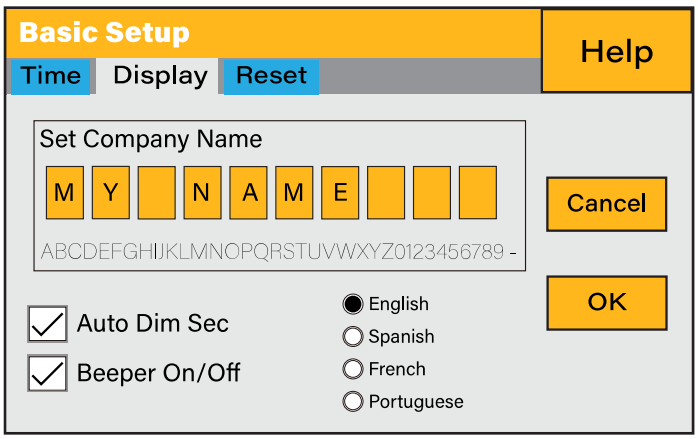

What this page displays:

- Beeper status (ON/OFF).
- Installers names.

What you can do from this page:

- Set up your company name.
- Switch the beeper ON or OFF.
- Set the LCD backlight to auto dim

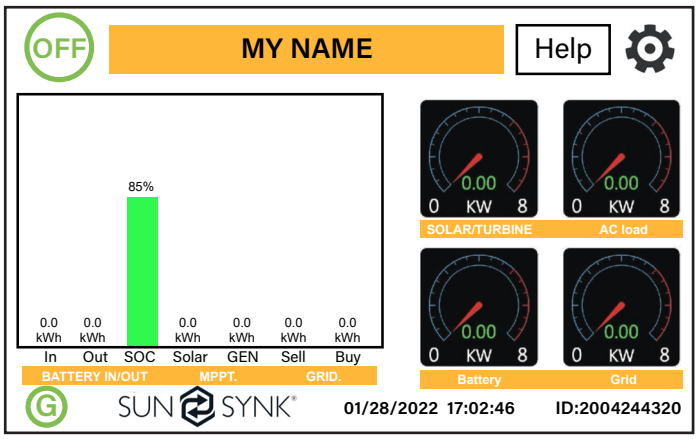

How to change the name:

Change the letters in each box by moving the arrows up and down and then select OK. This will change the name on the home screen.

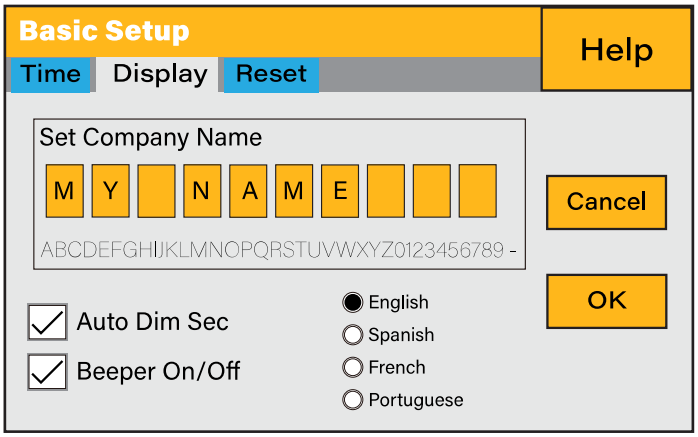

How to set the auto dim:

Set a number in the auto dim box to dim the LCD after a number of seconds.

How to turn the beep on or off:

Mark or unmark the beep box and the press OK to configure it as you prefer.

5.9. Factory Reset and Lock Code

To access the Settings, click on the gear icon on the right top of the navigation menu. 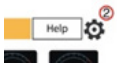

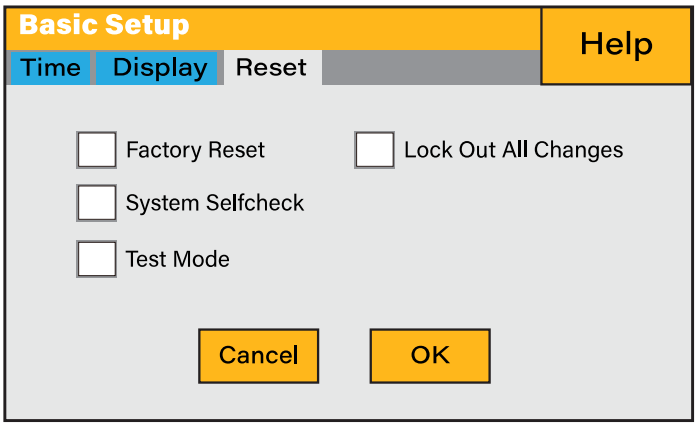

What this page displays:

- Reset status.
- Whether the 'lock code' is used or not.

What you can do from this page:

- Reset the inverter to the factory settings.
- System diagnostics.
- Change or set the 'lock code'.

What you can do from this page:

Factory Reset: Reset all parameters of the inverter

Lock out all changes: Enable this menu to set parameters that before the unit is locked and cannot be reset.

***Before performing a successful 'Factory Reset' and locking the systems the user must enter a password to allow the setting to take place. The password for 'Factory Reset' is 9999 and for lock out is 7777.**

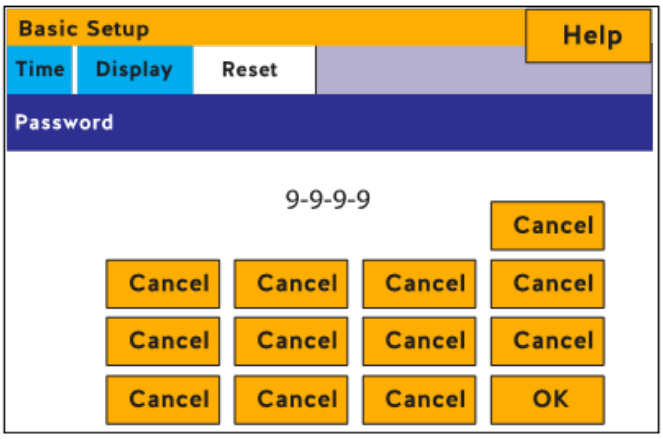

System self-check: Allows the user to conduct a system diagnosis.

Test mode (only for engineers): For engineers to conduct tests.

5.10. Battery Setup Page

To configure battery settings, click on the BATTERY icon and then on 'Batt type'.

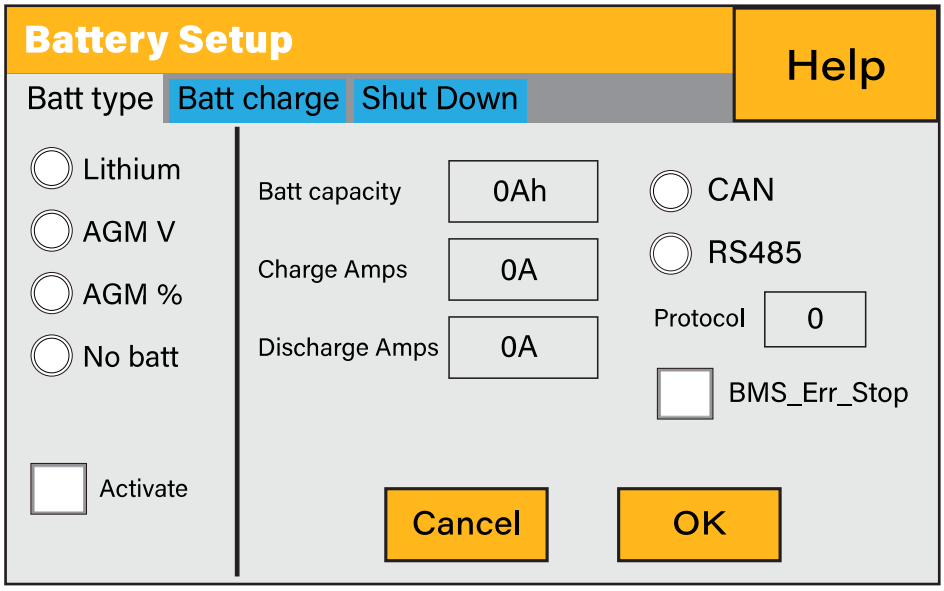

What this page displays:

- Battery capacity in (Ah) – For non-BMS-batteries the range allowed is 0-2000Ah, while for lithium-ion the inverter will user the capacity value of the BMS.
- Max battery charge current (Amps).
- Max battery discharge current (Amps), which should be 20% of the Ah rating for AGM only. For Lithium, please refer to the battery manufacturer documentation. Note: This is a global max. discharge current for both 'grid-tied' and 'backup' modes of operation and if the current exceeds this value inverter will shut down with an overload fault.
- TEMPCO settings - Temperature coefficient is the error introduced by a change in temperature.

What you can do from this page:

- Use battery voltage for all settings (V).
- Use battery SOC for all settings (%).
- No battery: tick this box if no battery is connected to the system.
- BMS setting.
- Active battery - This feature will help recover a battery that is 100% discharged by slowly changing from the solar array. Until the battery reaches a point where it can change normally.

5.11. Generator & Battery Page

To configure battery charging settings, click on the BATTERY icon and then on 'Batt Charge'.

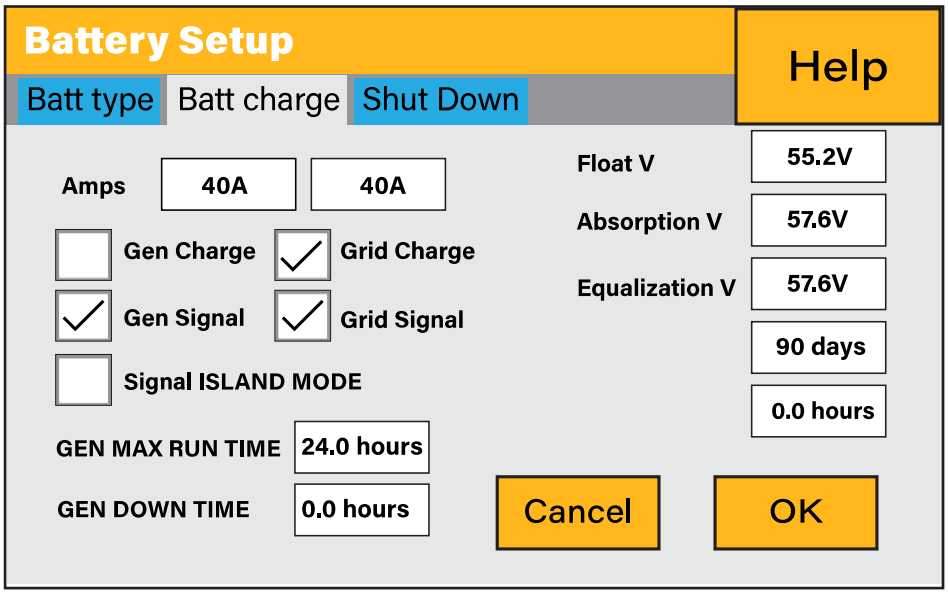

What this page displays:

- Generator start voltage/SOC %.
- Grid power start voltage/SOC %.
- Float V is the voltage at which a battery is maintained after being fully charged.
- Absorption V the level of charge that can be applied without overheating the battery.
- Float V for an AGM battery is 55.20V.
- Absorption V is for an AGM battery is 57.60V.
- Equalization V for an AGM battery is 58.80V.
- Equalizing charge/overcharge to remove sulphate crystals that build-up on the plates over time on lead-acid batteries.

What you can do from this page:

- Tick 'Gen Charge' to charge the batteries from the gen I/P.
- Tick 'Grid Charge' to charge the batteries from the grid I/P.
- Tick 'Gen Signal' signal to auto-switch a relay box.
- Tick 'Grid Signal' signal to auto-switch a relay box.

NOTICE

Do not alter these settings too many times on the same battery as it may damage the battery.

Gen Charge: Uses the GEN input of the system to charge battery bank from an attached generator.

Gen Signal: Normally open (NO) relay that closes when the Gen Start signal state is active.

Gen Max Run Time: This indicates the longest time the generator can run in one day. When the maximum running time is reached, the generator will be turned off. '24H' means the generator will run continuously.

Gen Down Time: This indicates the delay-time of the generator to shut down after it has reached the running time

Grid Charge: It indicates that the grid will charge the battery.

Grid Signal: Indicates when the grid should no longer charge the battery.

Recommended battery settings:

Battery Type	Absorption Stage	Float Stage	Voltage (every 30 days 3hr)
AGM (or PCC)	14.2V (57.6V)	13.4V (53.6V)	14.2V (57.6V)
Gel	14.1V (56.4V)	13.5V (54.0V)	
Wet	14.7V (59.0V)	13.7V (55.0V)	14.7V (59.0V)
Lithium	Follow its BMS voltage parameters		

Using a generator with a Sunsynk inverter:

A generator can either be connected to the Grid side or to the Gen connection. When connected to the Grid Input, the inverter will consider the power coming from the generator as 'Grid Supply'. Users should make sure this power goes to the LOAD only and should not be exported to other outlets as this will damage the generator.

An advantage from connecting the generator to the Grid Input is that it can be paralleled whereas the GEN/AUX input cannot be paralleled. That means the inverter will extract what power it requires from 'Grid Supply' to charge its batteries.

If the generator is connected to the inverter and a generating signal exists, the inverter will switch 100% of the load to the generator and then slowly increase the charging currents to the batteries. Therefore, the generator must be able to supply both the charge current and the total load current.

The generator can be controlled via a relay which has a set of dry-contacts to enable remote control. The current on thee contacts is limited to approximately, 1Amp 12V.

Below is a simple reference circuit of an auto start system that can autostart generators on a boat. (Sunsynk will be releasing a new OS E406 (Auto-Start) for better generator control).

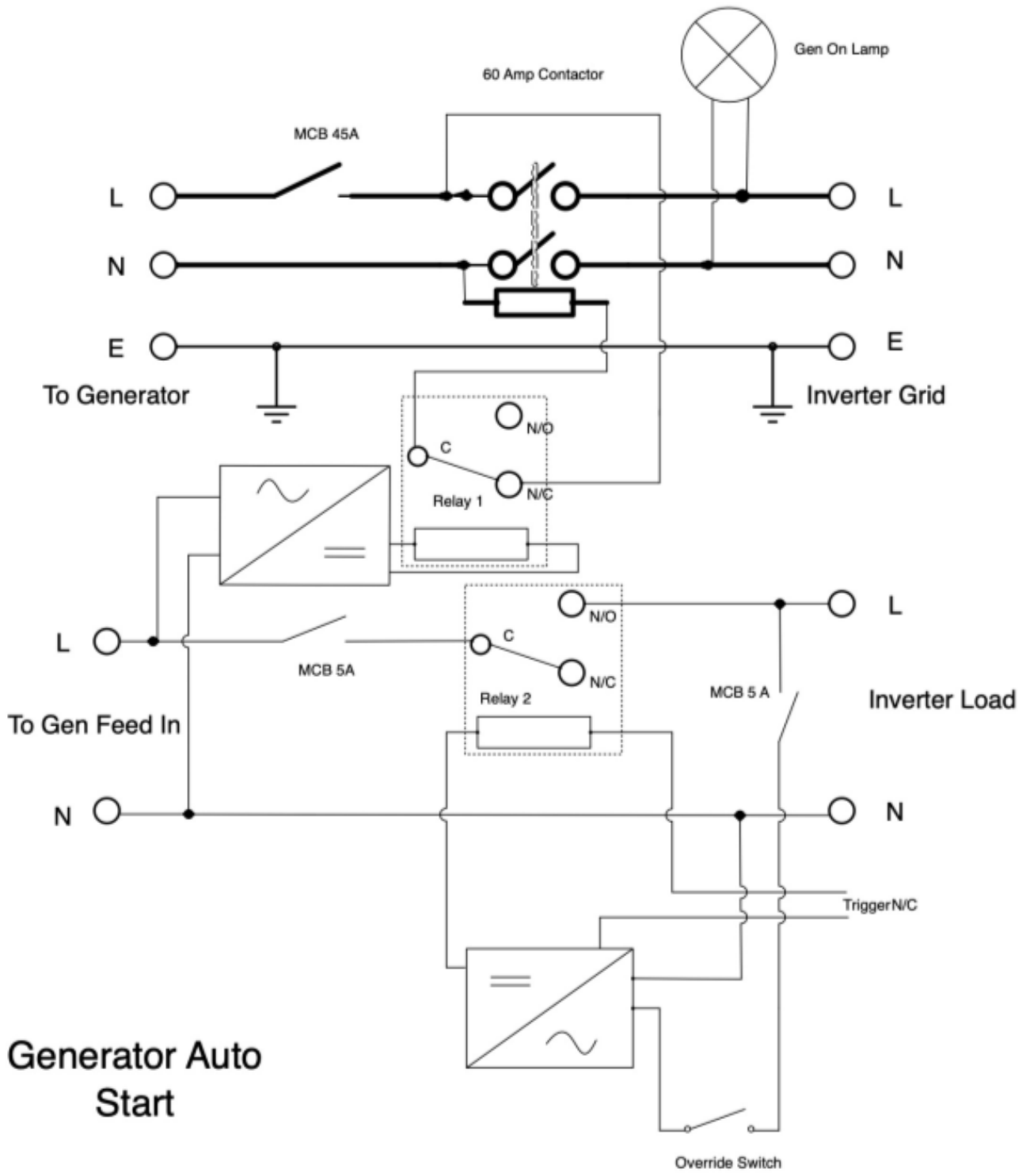
Gen On Lamp
60 Amp Contactor
MCB 45A
L
N
E
To Generator
L
N
E
Inverter Grid
N/O
C
N/C
Relay 1
L
To Gen Feed In
MCB 5A
N/O
C
N/C
Relay 2
MCB 5 A
L
Inverter Load
N
N
TriggerN/C
Generator Auto Start
Override Switch

5.12. Battery Discharge Page

To configure inverter's shutdown settings, click on the BATTERY icon and then on 'Shut Down'.

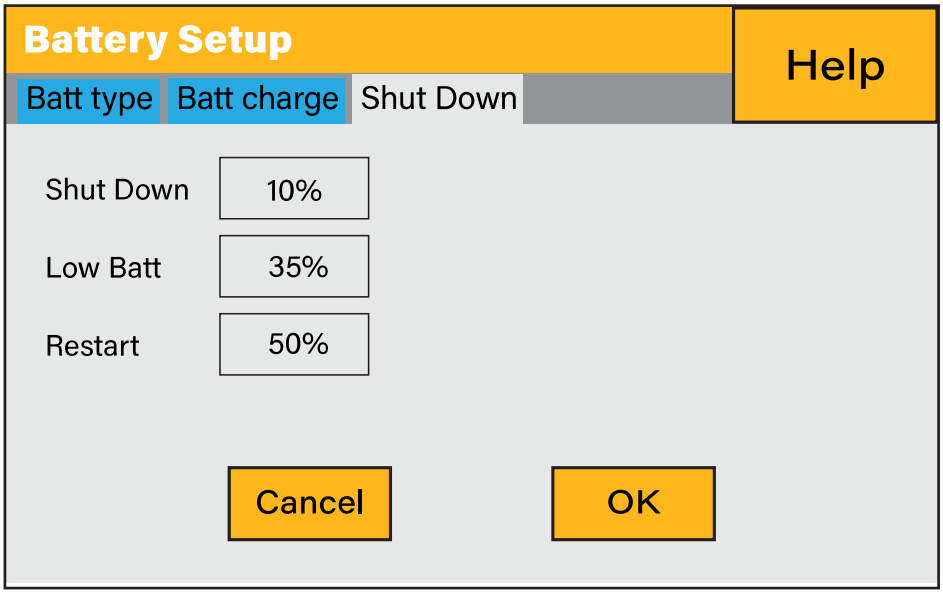

What this page displays:

- Inverter shutdown voltage set as either a voltage or %.
- Inverter low battery warning set as either a voltage or %.
- Restart voltage set as either a voltage or %.

What you can do from this page:

- Adjust battery shut down (voltage or %).
- Adjust low battery warning (voltage or %).
- Adjust restart (voltage or %).

NOTICE

Activating Shutdown causes the inverter to enter standby-mode. It does not completely shut down the inverter. Total shutdown occurs at voltages below 19V.

The voltage displayed on the Sunsynk Parity Inverter will vary depending on whether the inverter is charging or discharging the batteries.

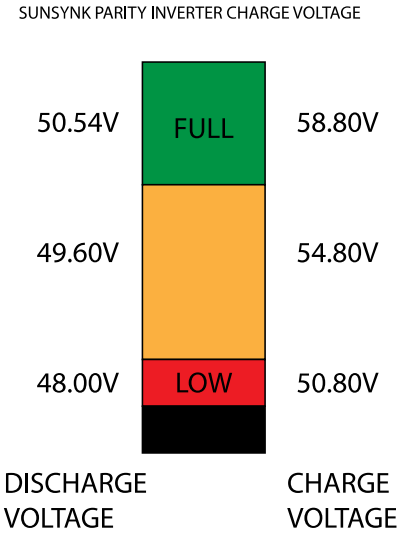

Since the batteries are 48V the figure on the left is x4:

- Fully Charged 50.54V (Discharge Mode)
- Fully Charged 58.50V (Charge Mode)
- 75% Charged 49.60V (Discharge Mode)
- 75% Charged 54.80V (Charge Mode)
- 25% Charged 48.00V (Discharge Mode)
- 25% Charged 50.80V (Charge Mode)
- Completely Discharged 47.50V

Setting the cut-off higher is better for the batteries.

The batteries recommended for use with the Sunsynk systems are AGM Lead Acid or Lithium Battery Banks. ('AGM' means Absorbed Glass Matt construction that allows the electrolyte to be suspended new the plate's active material. In theory, this enhances both the discharge and recharging efficiency. AGM batteries are very heavy as a result).

State of Charge

Bulk: Bulk charge is the first stage of a battery's charging process where the charger identifies the battery and its needs and then applies a high voltage to do the bulk of the charging. It involves about 80% of the recharge. The properly sized charger will give the battery as much current as it will accept up to charger capacity (25% of battery capacity in Amp hours).

Absorption: To fully charge a battery a period of charging at a relatively high voltage is needed. This period of the charging process is called absorption. This occurs when the charging of a battery has reached reached 80% of its capacity. The remaining charge equals 20% approximately. It makes the charger to hold the voltage at the charger's absorption voltage (between 14.1 VDC and 14.8 VDC, depending on charger set points) and decreasing the current until the battery is fully charged.

Float: The charging voltage is reduced to between 13.0 VDC and 13.8 VDC and held constant, while the current is reduced to less than 1% of battery capacity. This mode can be used to maintain a fully charged battery indefinitely.

Equalisation: This is essentially a controlled overcharge that occurs at the end of the Bulk mode and the absorption phase and is called the 'equalisation voltage'. However, this technically this phase has another function. Higher capacity wet (flooded) batteries sometimes benefit from this procedure, particularly the physically tall batteries. The electrolyte in a wet battery can stratify over time, if not cycled occasionally. In equalisation, the voltage is brought up above typical peak charging voltage well into the gassing stage and maintained for a fixed (but limited) period. This stirs up the chemistry in the entire battery, 'equalising' the strength of the electrolyte, and knocking off any loose sulphating that may be on the battery plates.

5.13. Setting Up a Lithium Battery

To set up a lithium-ion battery, click on the BATTERY icon and visit the 'Batt Type' column.

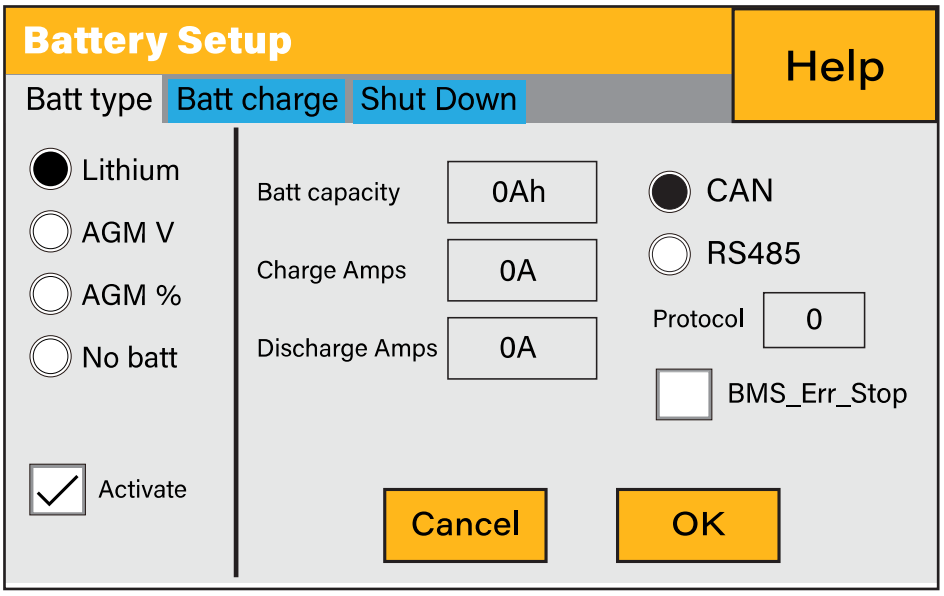

What this page displays:

- This information will only display if the 'Lithium' option is selected under 'Batt Type'.
- The type of communion protocol.
- Approved batteries.

What you can do from this page:

- Set up you Lithium-ion battery.

After installing a lithium battery, check on the communications page by clicking on the 'Li BMS' icon to see if the BMS information is visible. If some information is not displayed correctly (it should look like the diagram below) then there will be a communication error.

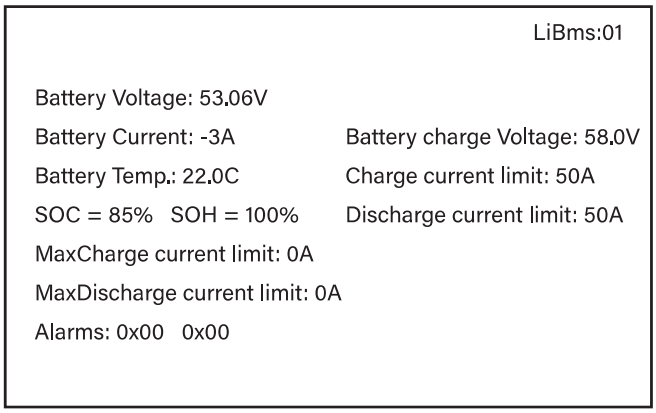

Therefore, if a communication error occurs:

1. Check that your data cable is the correct type.
2. Check that the data cable is plugged into the correct sockets. Usually, RS485 is employed, but some battery manufacturers use others..

NOTICE

With some types of lithium battery, the BMS cannot be controlled by the Sunsynk inverter. In this case, treat the battery as a lead-acid type and set the charging and discharging protocol following the battery manufacturer specification.

It is important to refer to the manuals that manufacturers produce for their batteries. That way, the chance of errors occurring during installation are greatly reduced. Below there is a list of batteries that has been examined, tested, and approved by Sunsynk.

Brand	Model	48V Storage Inverter	RS485 or CAN	Inverter Setup	Notes
PYLON	US2000B	✓	CAN	0	
			RS485	12	
	US3000		CAN	0	
			RS485	12	
	US2000C		CAN	0	
			RS485	12	
	US3000C		CAN	0	
			RS485	12	
	UP5000		CAN	0	
			RS485	12	
	US5000		CAN	0	
			RS485	12	
	Force L1		CAN	0	
			RS485	12	
	Force L2		CAN	0	
			RS485	12	
DYNESS	B4850	✓	CAN	0	
	POWERBOXF			0	
SolarMD	SS4074	✓	CAN	0	To be used with V2 Logger http://solarmd.co.za/inverter-compatibility-solarmd/ sunsynk-and-solar-md/
	SS4037			0	
	SS202			0	
SHOTO	SDC10-Box 5	✓	CAN	0	

Brand	Model	48V Storage Inverter	RS485 or CAN	Inverter Setup	Notes
HUBBLE	AM-2 5.5KW	✓	CAN	0	
SACRED SUN	SSIF2P15S48100C	✓	RS485	1	Cut Line 3, 6, 8
	FCIFP48100A		RS485	1	
	SSIFP48100A		RS485	1	
UZ ENERGY	UZ-EB51.2-100ALL	✓	CAN	0	
GenixGreen	ESS-5120	✓	RS485	6	
	ESS-10240		RS485	6	
	ESS-BOX2		RS485	6	
	ESS-BOX3		RS485	6	
	ESS-BOX4		RS485	6	
Sunwoda	H4850M	✓	RS485	7	
VISION Group	V-LFP51.2V100Ah-5KW	✓	CAN	13	
	VLFP51.2V200Ah-5KW		CAN	13	
Alpha Ess	M4856-P	✓	CAN	0	
	SMILE BAT		CAN	0	
GSL ENER-GY	GSL051100A-B-GBP2	✓	CAN	0	
	GSL051200A-B-GBP2		CAN	0	
	GSL051280A-B-GBP2		CAN	0	
	ZnP48100ESA1		CAN	0	
	GSL-51-100		CAN	0	
	GSL-51-200		CAN	0	
TOPBAND	TB51100F-T110	✓	CAN	0	
	TB51120-T110		CAN	0	
Weco	4K4 LV	✓	CAN	0	
	5K3 LV		CAN	0	
DOWELL	IPACK	✓	CAN	0	
	C3.3/IPACK		CAN	0	
	C6.5/IPACK C10		CAN	0	
Giter	G2500-48V	✓	CAN	0	
	G5040-48V		CAN	0	
CF Energy	CFE2400	✓	CAN	0	
	CFE5100		CAN	0	
	CFE5100S		CAN	0	
Batterich/ Greenrich	UP3686		CAN	0	
BYD	BYD Battery-Box LV Flex Lite		CAN	0	

Brand	Model	48V Storage Inverter	RS485 or CAN	Inverter Setup	Notes
Narada	48NPFC80		RS485	16	RJ45 Pin 1: GND RJ45 Pin 2: RS485_A RJ45 Pin 3: RS485_B RJ45 Pins 4, 5, 6, 7, 8: No Connection Single-phase Hybrid Inverter Comm version is E41E Single-phase Hybrid Inverter Comm version is 1001 - E016
	48NPFC100		RS485	16	
	48NPFC150		RS485	16	
	48NPFC200		RS485	16	
Deye	SUNB-5.0-C01-48-PC		CAN	0	
	SUNB-5.0-E01-48-PC		CAN	0	
	SUNB-5.0-G01-48-PC		CAN	0	
AOBOET	Uhome-LFP 5000		CAN	0	
	Uhome-LFP 2400		CAN	0	
Wattsonic	Li-LV battery series	✓	CAN	14	
KODAK	FL5.2	✓	CAN	0	
Fox ess	LD-48100P	✓	RS485	1	
PYTES Energy	E-BOX 48100R		CAN	0	
BST	MD48-100		CAN	0	
	MD48-50		CAN	0	
Highstart	HSD4870		CAN	0	
Rosen Solar Energy	LFP48V200AH		CAN	0	
ZRGP	ZR-FC48100-1630J1		CAN	0	
	ZR-FS4850-16OSJ1		CAN	0	
	ZR-FS48100-16OSJ1		CAN	0	
	ZR-PBX1		CAN	0	
BALANCELL	P26		CAN	0	
	P27		CAN	0	
Shanghai Green Tech Co.,Ltd.	GTEM-48V2500		RS485	12	
Unipower	UPI.FP4845		RS485	15	
LD	LD-100P210J		RS485	17	

Brand	Model	48V Storage Inverter	RS485 or CAN	Inverter Setup	Notes
BSL	B-LFP51.2V 100Ah		CAN	0	Float voltage 54.5V Absorption V 55.00V Disable equalisation 0 Days Shutdown 20% Low Batt 35% Restart 50%
	B-FLP51.2V 125Ah				
	B-LFP48-130E 51.2V 130Ah				
	B-LFP48-160E 51.2V 160Ah				
	B-LFP51.2V 200Ah Powerwall				
Enersol	lithium 48-100		CAN	0	BMS cable – straight RJ45 cable (no need to change pin outs on cable) Dip Switch settings is 1000 (for single battery)

NOTICE

When communications between battery and inverter does not exist, do not over-charge your battery bank (current or voltage). Many lithium batteries are limited to 100A, some are lower and some are higher. Ensure that voltage and current specifications provided by the battery manufacturer are followed.

If you are using lead acid batteries then follow the equation of C x 0.25 which means that the maximum charge or discharge you can apply to a battery is a quarter of the AH rating of the overall battery array. Eg.; A 200Ah battery array composed of 4 x 200Ah batteries in series has a maximum discharge of only 50Ah (200 x 0.25 = 50)

Also, ensure the cable is thick enough to support the current and the fuses connected are of the correct rating as per the recommendations of battery manufacturers.

5.14. Program Charge & Discharge Times

To set 'Charge' and 'Discharge' times, click on the 'System Mode' icon after clicking on the gear icon.

What this page displays:

- A setting to prevent the inverter exporting power to the grid - 'Zero Export'.
- The ability to limit power supply to only the household loads - 'Solar Export'.
- Set the power limits to supply only the loads connected to the LOAD port - 'Priority to Load Only'.

What you can do from this page:

- Set a real time to charge or discharge the battery.
- Choose to charge the battery from the grid or generator.
- Limit export power to the grid.
- Set the unit to **charge** the battery from the grid or generator ticking 'Grid' or 'Gen' and set what times this needs to occur.
- Set the time to **discharge** the unit to the load or export to the grid by unticking 'Grid' and 'Gen'.

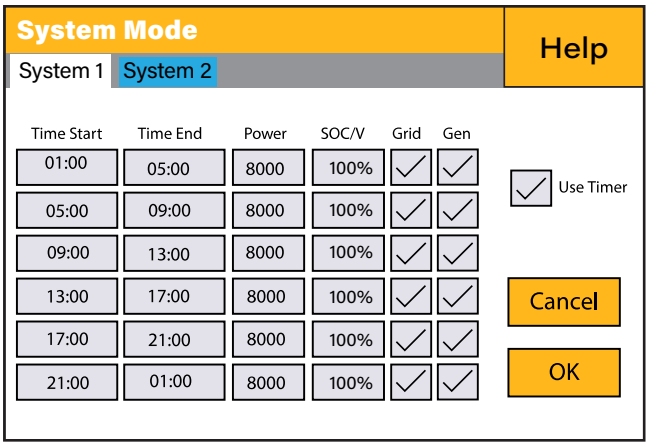

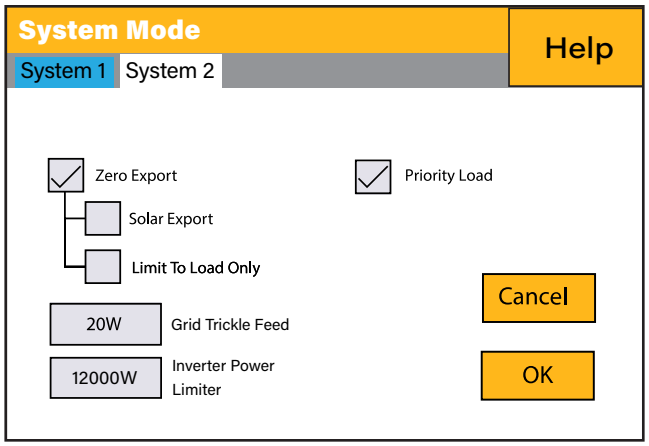

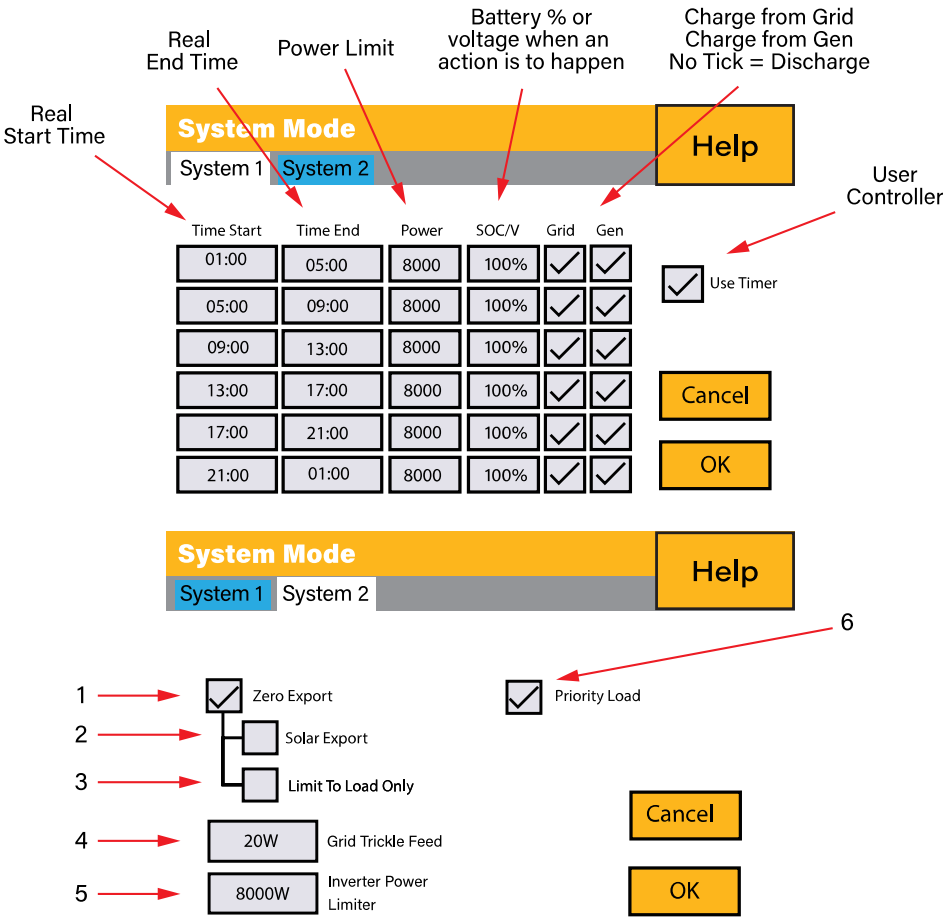

Concerning the detailed figures above:

1. Tick this box to do not export power back to the grid (the CT coil will detect power flowing back to the grid and will reduce the power of the inverter only to supply the local load).
2. Tick this box if you wish to export your solar power back to the grid.
3. Tick this box if you only want to supply power to the load side of the inverter.
4. 'Zero Export Power' is the amount of power flowing from the Grid to the Inverter. Set this value to '20 - 100W' to instruct the inverter to always take the prescribed amount of power from the Grid to minimise the tripping of sensitive pre-paid electricity meters if 'Reverse Power Detection' occurs.
5. This controls the maximum overall power, both to the 'Load' and 'Grid' ports combined. It is set to Low if an 'over-current' fault occurs
6. Tick this box if you wish to set the solar panels give power to the 'Load'. If you un-tick this box the solar will send power to charge the batteries.

Example:

This example shows the battery being charged up to 100% by both the Grid and Solar PV from 8 a.m. to 11 a.m. and then being able to supply up to 4kW of battery-power to the 'essential' loads from the 'Load' Port until the battery SOC drops to 50%.

IMPORTANT - When charging the batteries from the Grid or Generator, please ensure you have set the correct correct battery-charging settings on the battery charge as shown in Section 4.10 'Battery Setup' Home Page. If the 'Use Timer' function is activated then the inverter will use the battery power according to your settings when the Grid is present. If this function is not set, the batteries WILL ONLY be used for backup when there is no utility grid power.

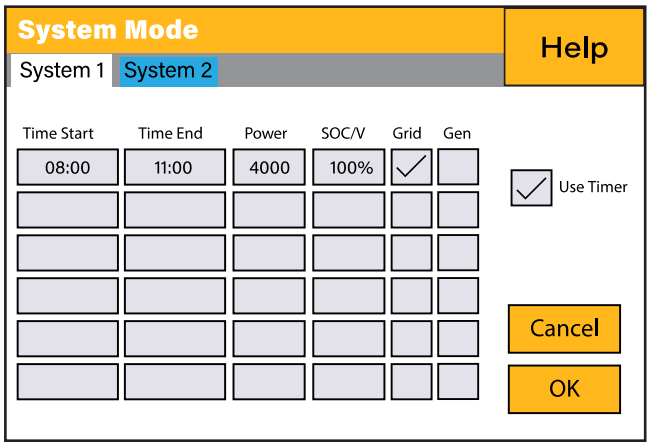

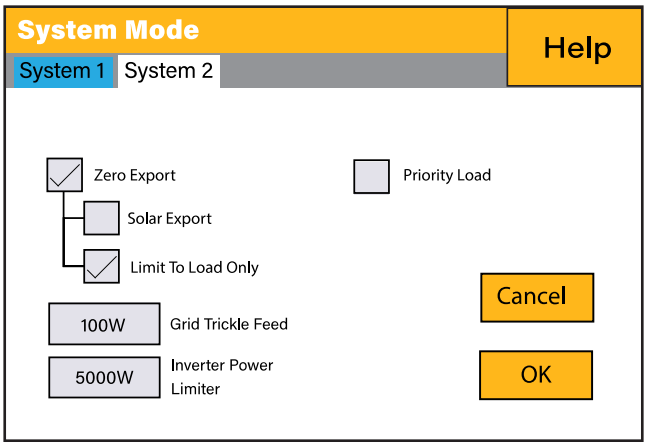

Example:

This is a zero-export power to the grid example.

The power produced is supplying the 'Non-Essential Load' while the inverter is set at a maximum power of 8kW (Max Sell Power). The inverter is connected to the grid, but no export is performed. The unit allows small amounts of power to flow from the Grid (100W Zero Export Power) to prevent any back-flow. In this example, the solar PV is prioritised to supply the Load first and then subsequently, charge the battery.

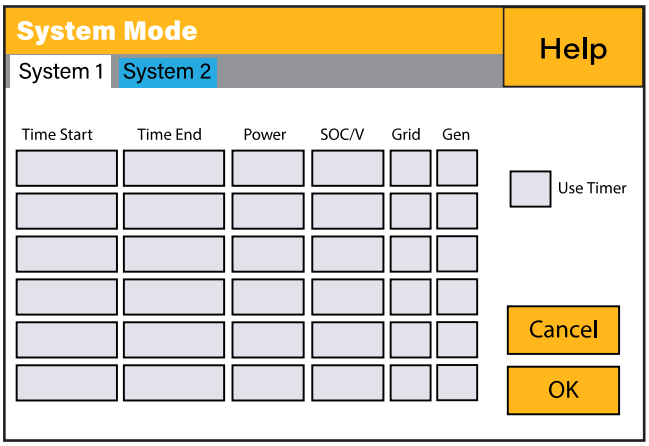

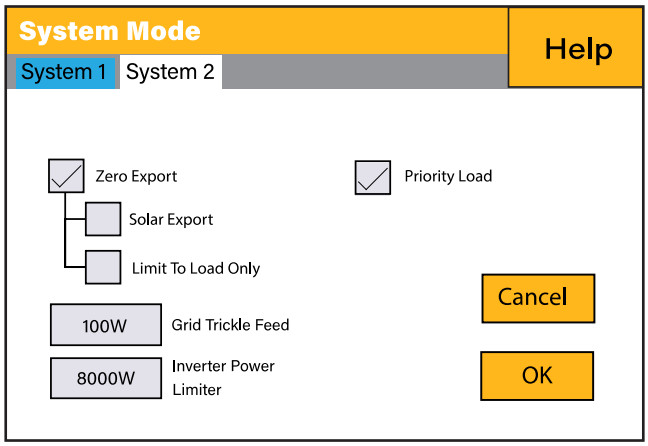

5.15. Grid Supply Page

On the Settings Menu, click on the GRID icon.

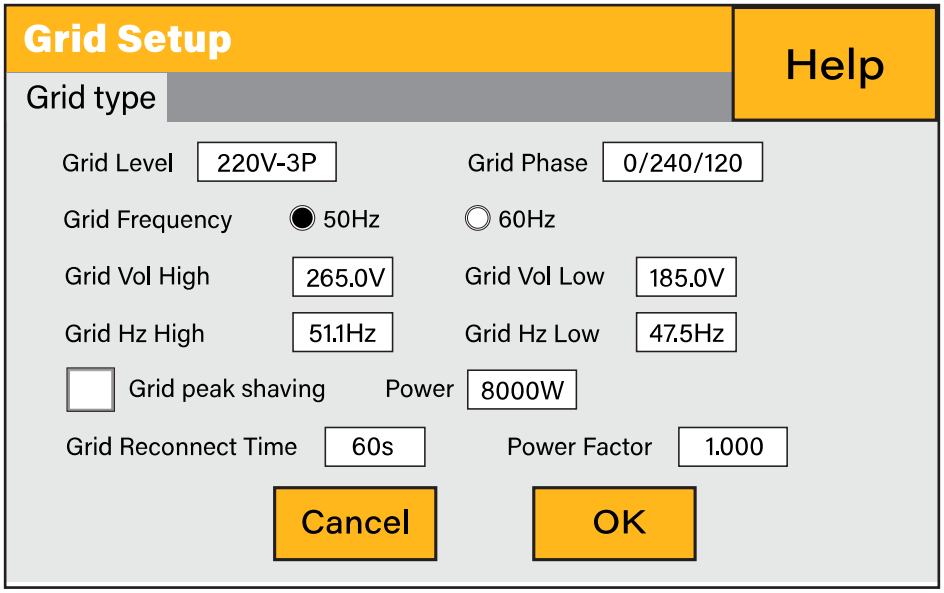

What this page displays:

- Grid frequency setting.
- Grid type (normally 230V three-phase).

What you can do from this page:

- Change grid's frequency setting (normally 50 Hz)
- Set the Maximum Grid Input Voltage ('Grid Vol High')
- Set the Minimum Grid Input Voltage ('Grid Vol Low')
- Set the Maximum Grid Frequency ('Grid Hz High')
- Set the Minimum Grid Frequency ('Grid Hz Low)
- Select the correct Grid Type in your local area, otherwise the machine will not work or be damaged.
- Select the correct Grid Frequency in your local area.

5.16. Advanced Settings for Paralleling Inverters

To configure multi-inverter settings, click on the ADVANCE icon.

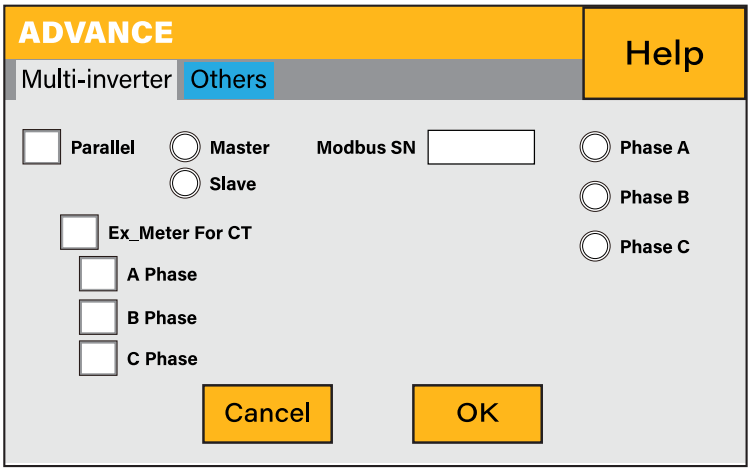

What this page displays:

- If the inverter operates as a master or a slave.
- Modbus Device ID – 'Modbus SN' that must be unique for each inverter connected to the bus/wire.

What you can do from this page:

- Set the inverter as a master or slave per bus/wire.
- Set the phase in which the inverter will be paralleled.
- Set the Modbus SN for paralleling.

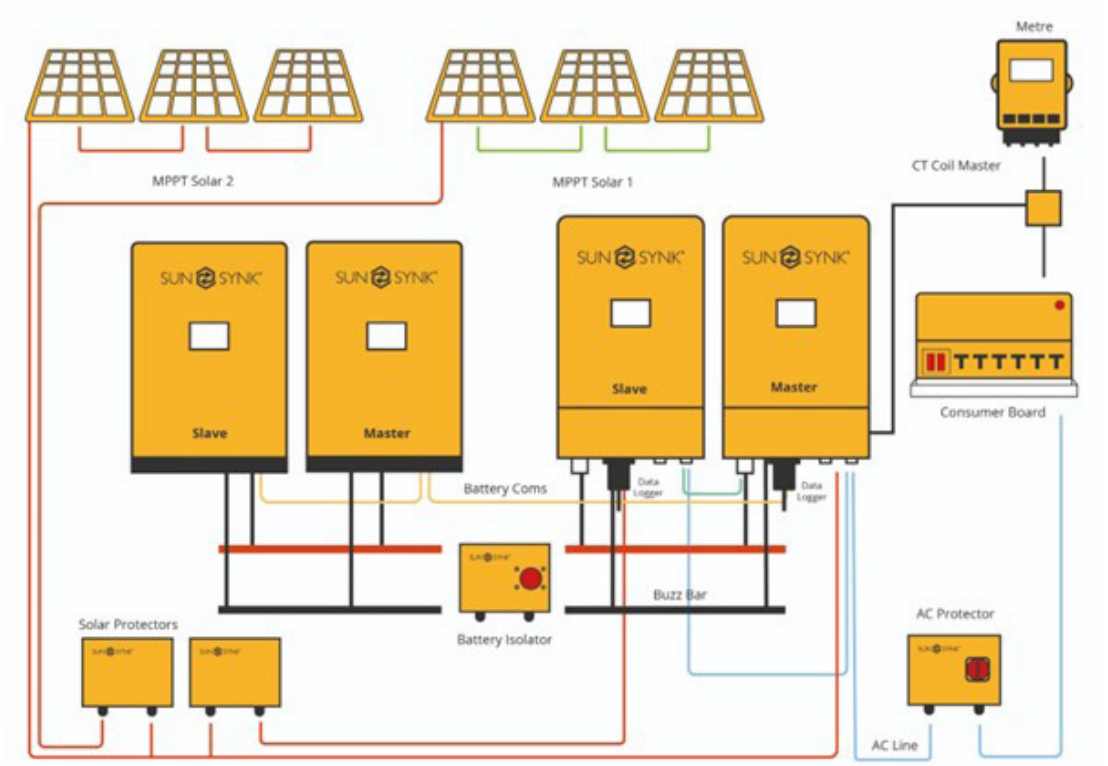

The Sunsynk inverter can be wired standalone or where more power is required it can be connected in parallel. **The maximum number of inverters that can be paralleled in a three phase utility grid is 10.** In the case where 10 inverters are operating in parallel, one will operate as the Master and the other ones as Slaves.

For stability, all the batteries need to be connected in parallel. It is recommended a minimum cable size of 50mm diameter with fuse isolators to each inverter.

Each invert will require a fuse isolator with surge protection and each group circuit will require an RCD. If the batteries as supplying power to the main load during the outage then a change over switch will also be required or a split load can be used.

- The CT coils used to limit export power must only be connected to the master. Therefore, if six inverters are paralleled, three CT coils will be required.
- Connect a RJ45 communication cable between each inverter; the order is not important since both sockets are the same, so there is no IN or OUT.
- Each phase must only have one master and the others set to slave.
- Each inverter must have a unique Modbus number.
- The maximum length of the communication cables is 2 meters (do not exceed this value)
- All batteries must be connected in parallel and the MPPTs must be kept separate.
- **IMPORTANT: When configuring inverters in parallel, it is important to first check firmware versions to be all the same on all inverters. It is strongly recommended to request firmware update on all inverters to the latest and the exact same firmware version.**
- **IMPORTANT: All inverters in a parallel system must have their own isolating load breaker before it goes to the parallel breaker to ensure while programming that the load outputs are isolated from each other.**
- Only once confirmed all inverters are programmed correctly in parallel then only the isolating breakers can be switched on, which then feeds to the main load output breaker that feeds the loads.

NOTICE

The cables have two ends, one to be specifically connected to the BMS and the another one to be connected to the inverter, do not change it.

If the communication is not working correctly between inverters then errors will show up on the display. In this case, please check all settings and data cable.

NOTICE

- **The load outputs can be connected in parallel.**
- **The grid input can also be connected in parallel.**
- **You cannot connect the Aux/Gen port in parallel, because this causes a conflict between the frequency of the generator and the frequency of the grid.**

Some common questions that occur when paralleling inverters:

Q1: What is the sequence to install/connect/commission?

First of all, leave the main supplies off. Next, connect all communication cables, set up all LCDs and then, last of all, turn on the main supplies.

Q2: What are the indications that the communication and the system are ok or not?

Parallel errors will be shown as fault F46 on the display.

Q3: What are the consequences of not setting one inverter in a parallel mode?

It can damage the inverter.

Q4: What are the consequences of having more than one Master Inverter or having no inverter set as 'Master'?

It can damage the inverter. There are cases in which it is possible to have more than one master. For example, as aforementioned, six inverters paralleled in a three phase utility grid (three masters).

Q5: What are the consequences for setting A, B, or C phases wrong while in parallel mode?

It can damage the inverter. Recommend checking the phase rotation with a meter before switching on.

Q6: What are the consequences of factory resetting, power cycling, or firmware updating one inverter in a parallel system?

There is no consequence, but the master inverter will keep controlling the slaves.

Q7: What consequences for changing ALL/ANY settings while operating in parallel mode?

It can damage the inverter and fault F46 will be indicated on the display.

If you need further help please refer to the Sunsynk website where you will find training videos and Frequently Asked Questions www.sunsynk.com. From here you can also update the inverter operating system if required. In most cases, our inverters are fine as they are and no upgrades are needed.

5.17. Solar Power Generated

This page shows the daily, monthly, yearly, and total solar power produced. Access this page by clicking on the 'Solar/Turbine' icon on the Home Page.

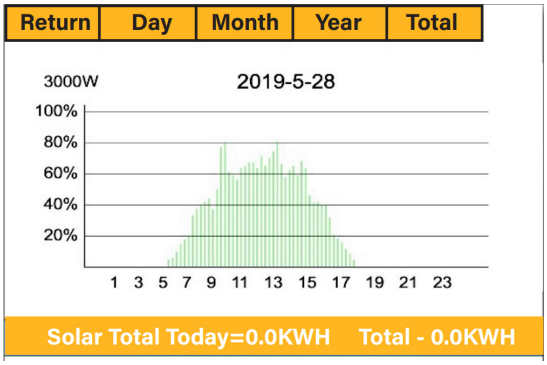

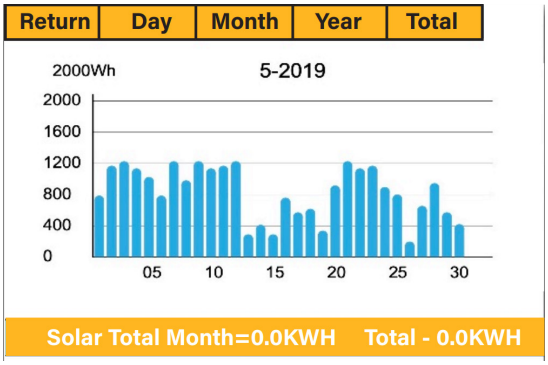

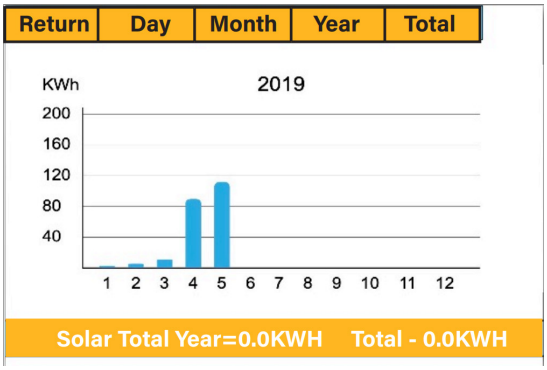

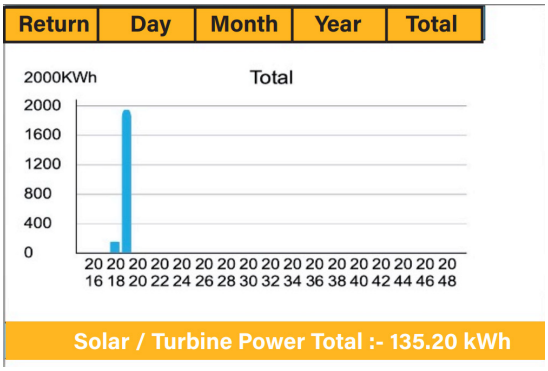

5.18. Grid Power

This page shows the Daily / Monthly / Yearly and total grid power export or consumed. Access this page by clicking on the 'Solar/Turbine' icon on the home page.

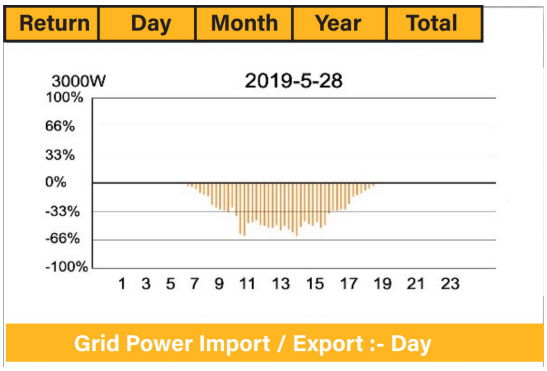

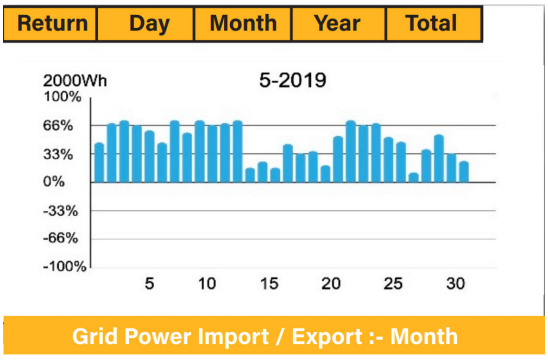

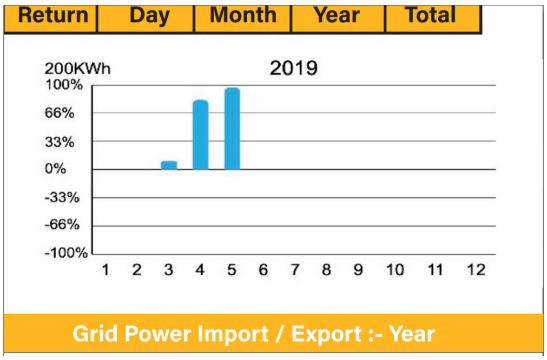

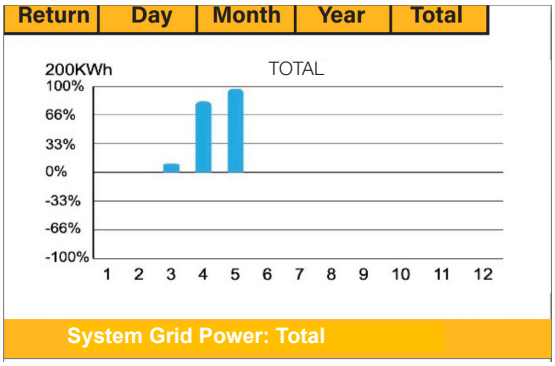

5.19. Advanced Settings for Wind Turbines

To configure wind turbine settings, click on the ADVANCE icon.

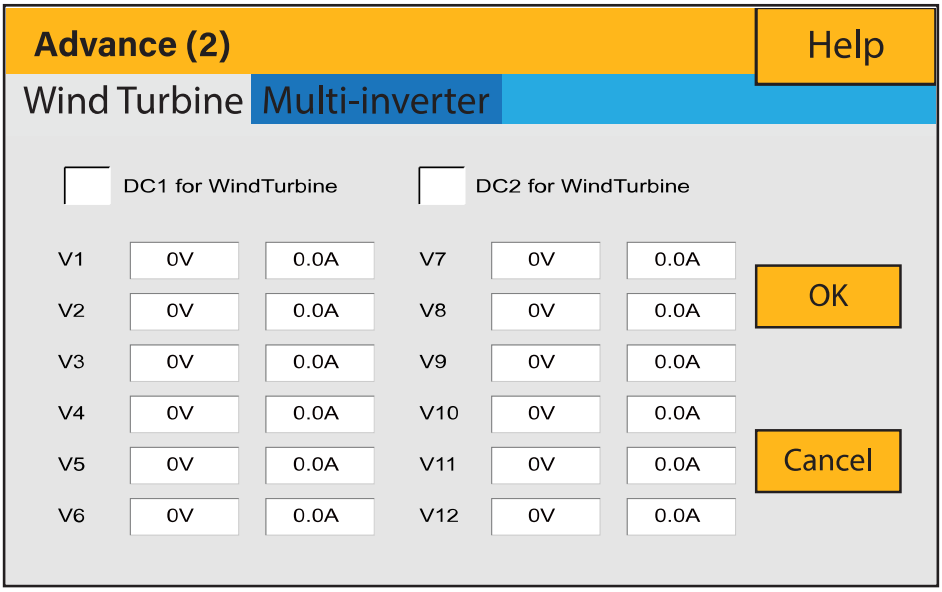

What this page displays:

- If one or both of the MPPTs are connected to a wind turbine.

What you can do from this page:

- Select the MPPT to be used as a turbine input.

The table below shows the maximum current depending on the voltage of the wind turbine.

Voltage (V)	Max. Current (A)	Power (W)
150	23.33	3500
200	17.50	3500
250	14.00	3500
300	11.67	3500
400	8.75	3500

NOTICE

- **DO NOT use a wind turbine that exceeds 400V.**
- **Use a self-breaking wind turbine. Once the batteries are fully charged and the inverter is not exporting any power the load can drop. This can cause the turbine to speed up dramatically, which can be very dangerous and usually happens suddenly. Thus, it is essential to use a self-breaking turbine.**

Most wind turbines are three-phase PM type. Therefore, either a wind turbine controller or a direct connection to the MPPT via a simple protection circuit will be required.

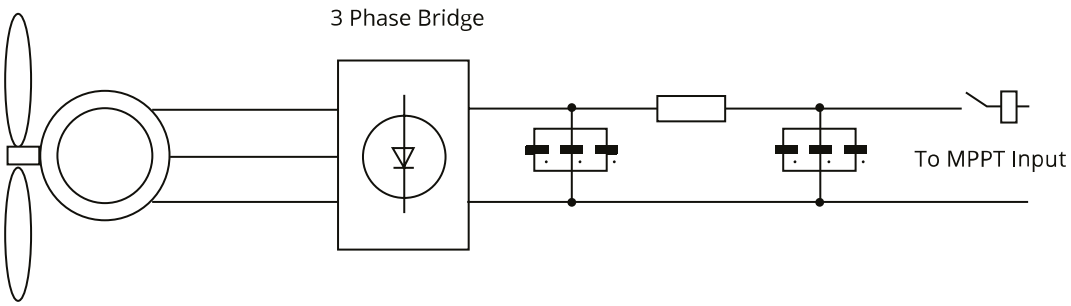

Dump Load or Diversion Load is an important part of an off-grid power system. When the battery (Battery Bank) is fully charged, and the water turbine / wind turbine / solar PV module is still generating, a dump load is a useful device to send spare electricity to. This can be done by using a switch on a smart load option or by utilising a wind turbine controller with a built-in dump load. Also, a hot water tank controlled via a smart-load can act as a good 'dump-load' however, in very windy conditions it may be necessary to shunt the output.

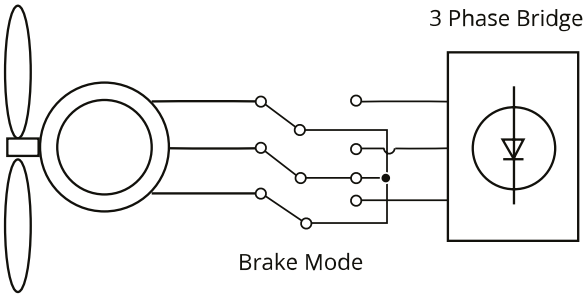

5.20. Advanced Settings for Auxiliary Load

To configure Auxiliary Load (previously known as "smart load") settings, click on the AUX LOAD icon.

What this page displays:

- Use of the Gen (Aux) input or output.

What you can do from this page:

- Set up a generator input.
- Set up an auxiliary (smart) load.
- Set up Peak Power Shaving.
- Use an additional inverter or micro inverter.

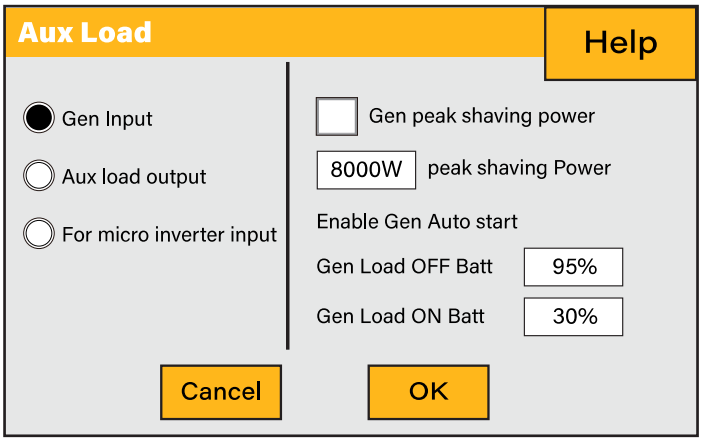

A nice feature of this page is that when the batteries are full and the inverter is still producing power from the solar PV or turbine, it is possible to direct the power generated to another load such as a water heater.

Aux Load off Battery % or Voltage	Battery level when the Aux load switches off
Aux Load on Battery % or Voltage	Battery level when the Aux load switches on.
Solar Power	Power limiter to the maximum power allowed to the Aux load.
Gen Input	Tick this box if using a Generator.
Aux Load Output	Tick this box if using an Aux or Smart Load.
For Micro inverter Input	Tick this box if intending to connect a supplementary inverter or micro inverter (Max. 4kW).
Zero Export	Tick this box to stop exporting power produced by the Aux Load.
Gen Peak Shaving	Tick this box to use peak power shaving.

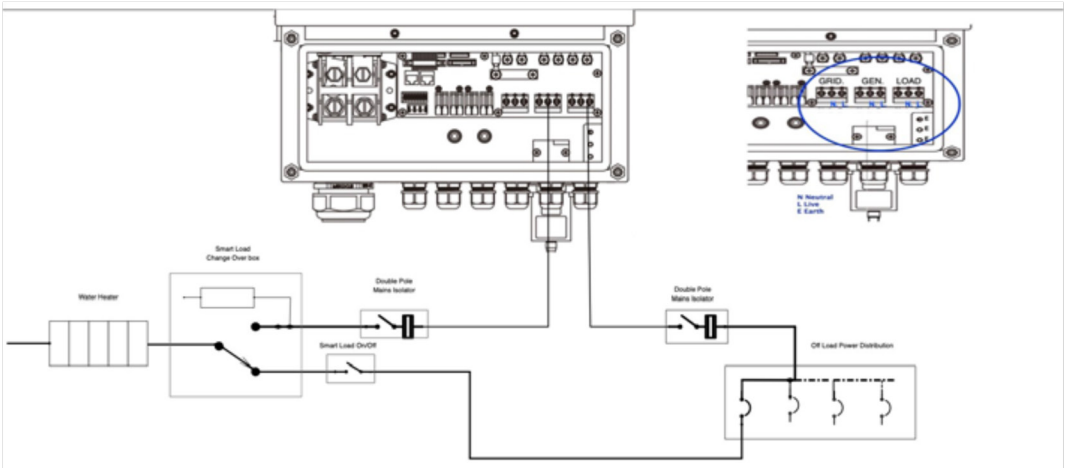

5.21. Advanced Settings for Peak Shaving

To configure Peak Power Shaving function, click on the AUX LOAD icon.icon.

What this page displays:

- Generator peak shaving is ON or OFF.
- Peak Power Shaving value.

What you can do from this page:

- Switch on the generator and/or grid peak power saving and set the power shaving value.

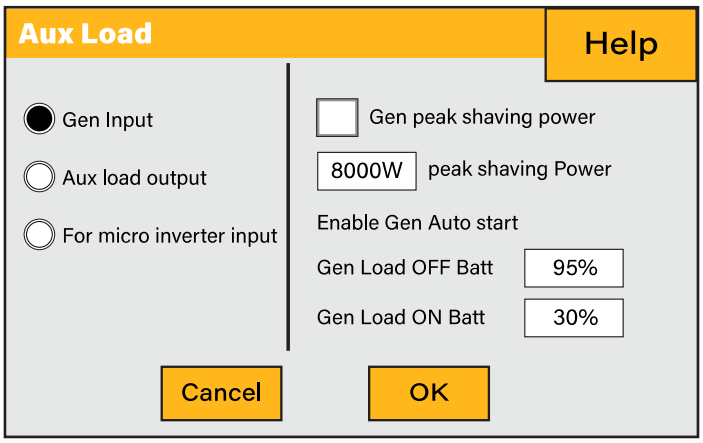

Peak Shaving: This is a technique used to reduce electrical power consumption during periods of maximum demand on the utility grid. This enables the user to save substantial amounts of money due to the expensive peak power charges.

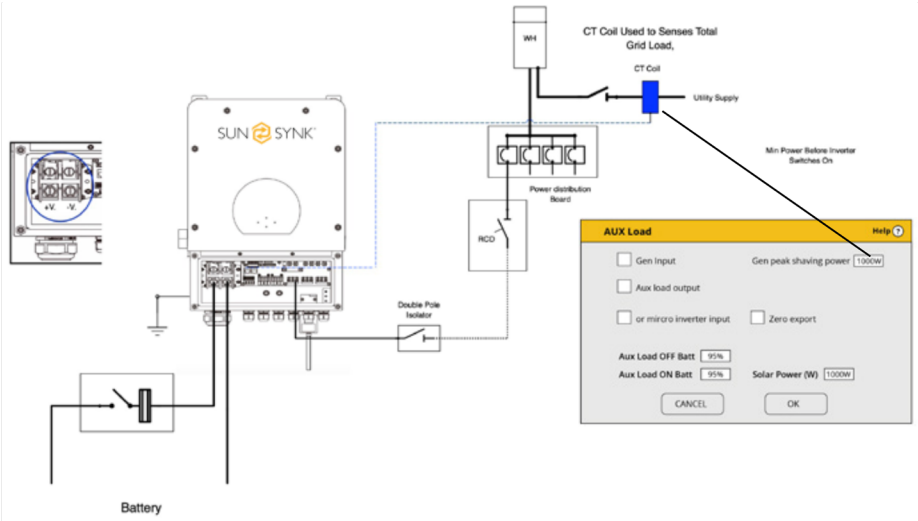

5.22. Fault Codes

To check the fault codes click on the FAULT CODES icon on the settings menu.

FAULTS CODES		SUN-12K
Alarms Code		Occured
F41	Parallel_System_Stop	2022-01-26 12:45
F56	DC_VoltLow_Fault	2022-01-24 11:00
F56	DC_VoltLow_Fault	2022-01-07 18:19
F41	Parallel_System_Stop	2022-01-08 01:58
F41	Parallel_System_Stop	2021-11-09 13:22
F56	DC_VoltLow_Fault	2021-11-03 17:48
F56	DC_VoltLow_Fault	2021-10-27 16:31
F13	Grid_Mode_changed	2021-10-20 19:17

If any of the fault messages listed in the following table appear on your inverter and the fault has not been removed after re-starting, please contact your local vendor or service centre. The following information is required:

1. Inverter serial number.
2. Distributor or service centre of the inverter.
3. On-grid Power Generation Date.
4. The problem description (including the fault code and indicator status displayed on the LCD) with as much detail as possible.
5. Owner's contact information.

Error Code	Description	Solutions
F13	Working Mode Change	Inverter work mode changed 1. Reset the inverter. 2. Seek help from Sunsynk.
F18	AC over current fault or hardware	AC Slide over current fault. 1. Check if the backup load power is within the range of the inverter. 2. Restart, and check if it is normal.
F20	DC over current fault of the hardware	DC Over current fault 1. Check if PV module and battery connections. 2. Reset the system.
F23	AC leakage current is trans over current	Leakage current fault 1. Check the PV module and inverter cables. 2. You may have a faulty PV panel (earth short) 3. Restart inverter
F24	DC insulation imped-ance failure	PV isolation resistance is too low 1. Check if the connection of PV panels and inverter are firmly connected. 2. Check if the earth bond cable on inverters is con-nected to the ground.
F26	The bus bar is unbal-anced	1. Please wait 5 minutes to see if it returns to nor-mal. 2. Fully reset the inverter.
F35	No at: grid	1. Check if the inverter's connected to the AC grid. 2. Check if the RSCD had not tripped. 3. Check if the switch and fuses between the inverter and grid are all switched on.
F42	AC line low voltage	Grid voltage fault 1. Check if the voltage is in the range of standard voltage in specification this can be adjusted via the grid set up page. 2. Check if grid cables are correctly connected.
F47	AC over frequency	Grid voltage fault 1. Check if the voltage is in the range of standard voltage in specification this can be adjusted via the grid set up page. 2. Check if grid cables are correctly connected.
F48	AC lower frequency	Grid frequency out of range 1. Check if the frequency is in the range of specifica-tion 2. You may need to adjust the frequency on the grid set up page.

Error Code	Description	Solutions
F56	DC bus bar voltage is too low	Battery low voltage 1. Check if the battery voltage is too low. 2. If the battery voltage is too low use the PV or grid to charge the battery. 3. Check the battery BMS Important: Especially with Lithium batteries, ensure that the batteries Max. discharge current or power specification is the same or higher than the inverter specification.
F64	Heat sink high-temperature failure	Heat Sink temp is too high Check if the working environment temperature is too high. Turn off the inverter for 30 minutes and restart.

Fault Information	Instruction	Fault Information	Structure
F01	DC_Inversed_Failure	F33	AC_OverCurr_Fault
F02	DC_Insulation_Failure	F34	AC_Overload_Fault
F03	GFDI_Failure	F35	AC_NoUtility_Fault
F04	GFDI_Ground_Failure	F36	AC_GridPhaseSeque_Fault
F05	EEPROM_Read_Failure	F37	AC_Volt_Unbalance_Fault
F06	EEPROM_Write_Failure	F38	AC_Curr_Unbalance_Fault
F07	GFDI_Fuse_Failure	F39	INT_AC_OverCurr_Fault
F08	GFDI_Relay_Failure	F40	INT_DC_OverCurr_Fault
F09	IGBT_Failure	F41	AC_WU_OverVolt_Fault
F10	AuxPowerBoard_Failure	F42	AC_WU_UnderVolt_Fault
F11	AC_MainContactor_Failure	F43	AC_VW_OverVolt_Fault
F12	AC_SlaveContactor_Failure	F44	AC_VW_UnderVolt_Fault
F13	Working_Mode_change	F45	AC_UV_OverVolt_Fault
F14	DC_OverCurr_Failure	F46	AC_UV_UnderVolt_Fault
F15	AC_OverCurr_Failure	F47	AC_OverFreq_Fault
F16	GFCI_Failure	F48	AC_UnderFreq_Fault
F17	Tz_COM_OC_Fault	F49	AC_U_GridCurr_DcHigh_Fault
F18	Tz_Ac_OverCurr_Fault	F50	AC_V_GridCurr_DcHigh_Fault
F19	Tz_Integ_Fault	F51	AC_W_GridCurr_DcHigh_Fault
F20	Tz_Dc_OverCurr_Fault	F52	AC_A_InductCurr_DcHigh_Fault
F21	Tz_GFDI_OC_Fault	F53	AC_B_InductCurr_DcHigh_Fault

Fault Information	Instruction	Fault Information	Structure
F22	Tz_EmergStop_Fault	F54	AC_C_InductCurr_DcHigh_Fault
F23	Tz_GFCI_OC_Fault	F55	DC_VoltHigh_Fault
F24	DC_Insulation_Fault	F56	DC_VoltLow_Fault
F25	DC_Feedback_Fault	F57	AC_BackFeed_Fault
F26	BusUnbalance_Fault	F58	AC_U_GridCurr_High_Fault
F27	DC_Insulation_ISO_Fault	F59	AC_V_GridCurr_High_Fault
F28	DCIOver_M1_Fault	F60	AC_W_GridCurr_High_Fault
F29	AC_AirSwitch_Fault	F61	AC_A_InductCurr_High_Fault
F30	AC_MainContactor_Fault	F62	AC_B_InductCurr_High_Fault
F31	AC_SlaveContactor_Fault	F63	ARC_Fault
F32	DCIOver_M2_FaulT	F64	Heatsink_HighTemp_Fault

NOTICE

- **The 3-Phase Hybrid Inverter is designed for grid-connected operation.**
- **The inverters meet the main standards concerning safety and electromagnetic compatibility. Before leaving the factory, all inverters undergo rigorous testing to ensure the inverter can operate reliably as presented in Chapter 3 'Technical Specifications'.**

If you need further help please refer to the Sunsynk website where you will find training videos and frequently asked questions www.sunsynk.com.

5.23. Operation Modes

5.23.1. MODE I: Basic

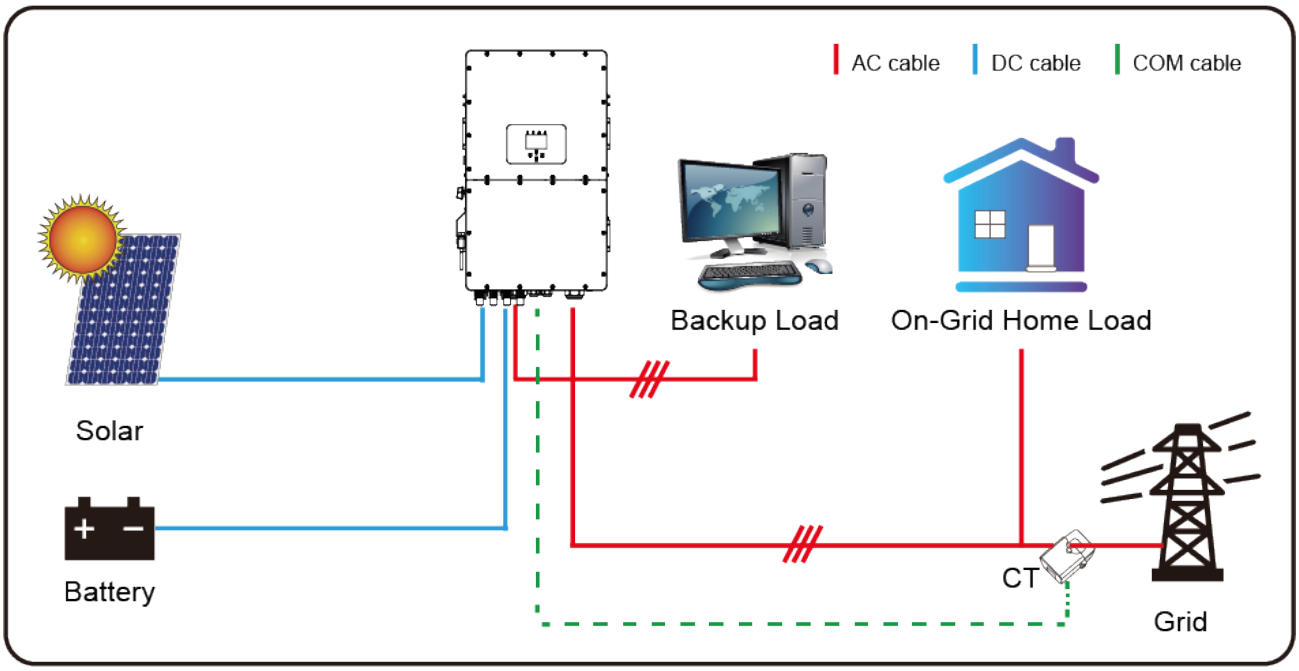

5.23.2. MODE II: With Generator

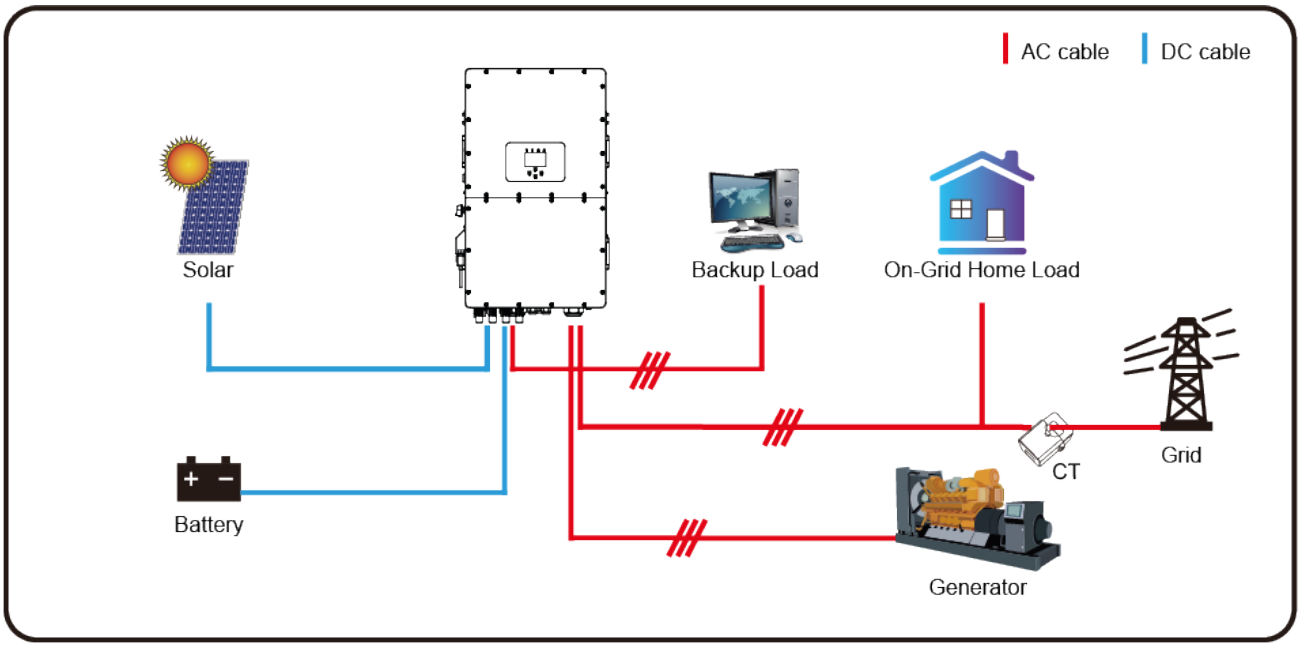

5.23.3. MODE III: With Smart-Load

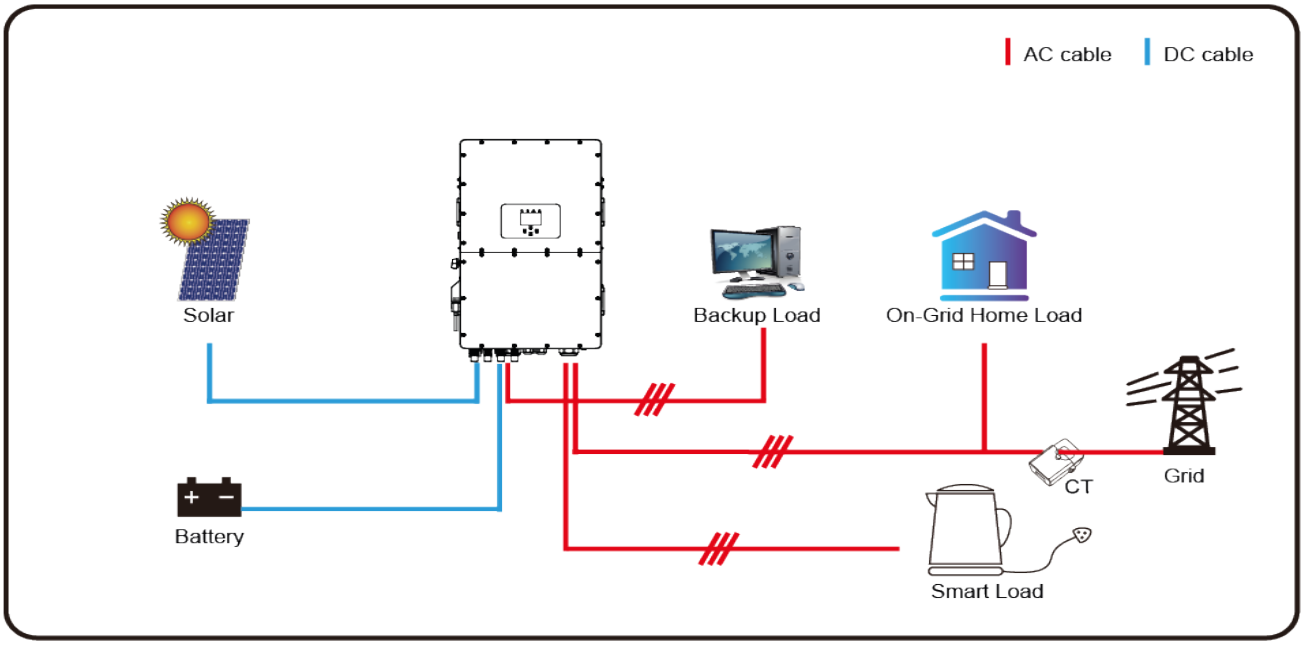

5.23.4. MODE IV: AC Couple

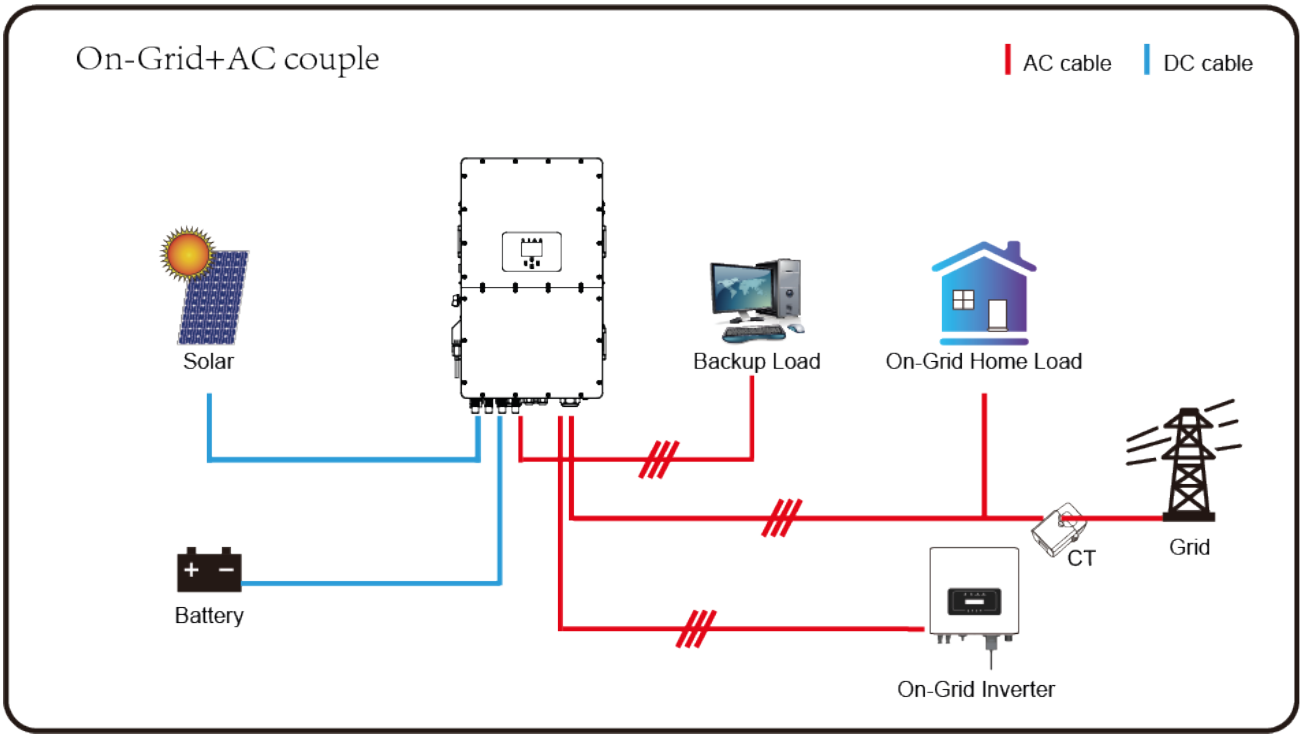

6. COMMISSIONING

6.1. Start-Up / Shutdown Procedure

The inverter must be installed by a qualified / licensed electrical engineer in accordance to the countries wiring regulations.

Before switching on, the installation engineer must have completed the Earth Bond, RCD and earth leakage tests, checked that the solar panel Voc voltage does not exceed 480V and checked the battery voltage.

Power ON Sequence:

1. Switch on AC
2. Press Start Button
3. Switch on Battery and battery breaker
4. Switch on the DC (PV Isolator

Shutdown Sequence:

1. Switch off AC
2. Press the start button
3. Switch off the battery and the battery breaker
4. Switch off the DC (PV isolator

6.2. Information for Commissioning the Inverter

After you have successfully powered up the inverter, it must be programmed and set up as per the programming feature above.

Solar	Check each bond on the solar panels	Check the VOC does not exceed 480V	Ensure both MPPTs are balanced
GRID	Measure the supply voltage check it matches the settings of the inverter	If it falls out of the setting range it will cause the inverse shut down and alarm	See Grid Setup page
BATTERY	Check the battery charge and discharge is within the C rating of the battery. Too high will damage the battery		Check the battery BMS is communicating with the inverter
SYSTEM MODE	This is the heart of the system this controller everything	Ensure you are familiar with this, if you fully understand the controller you will fully appreciate the capabilities of this inverter	See section 'Program Charge / Discharge Times'
ADVANCE	This is for paralleling systems (Under Development), and wind turbine	If paralleling inverters in 3 Phase check you phase rotation before switching on the AC Load, in 3 Phase the output voltage will increase across phase to 400V	If using a wind turbine please ensure you have the correct limiting resistor, caps and rectifier
FAULT CODES	Familiarize yourself with common fault codes		

6.3. GDFI Fault

Before the inverter connects to the Grid, it will detect the impedance (effective resistance) of the solar PV + to Ground, and the impedance of the solar PV - to ground. If any of the impedance values are less than 33kΩ, the inverter will not connect to the Grid and will report an error F24 on its LCD.

7. MAINTENANCE

The inverter is low maintenance. However, it is important that at least twice a year (for dusty environments this may need to be carried out weekly) all the cooling fans, air ducts are cleaned and dust free.

Check if there are no fault codes and Lithium battery communication is correct.

Weekly cleaning statement: Suggest micromesh filters as an available option, micro ants here are a real problem.

APPENDIX A

Definition of RJ45 Port Pin for BMS1

No.	RS485 Pin
1	485_B
2	485_A
3	GND_485
4	CAN_H1
5	CAN_L1
6	GND_485
7	485_A
8	485_B

BMS1 Port

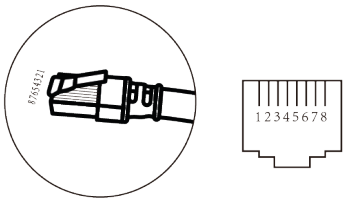

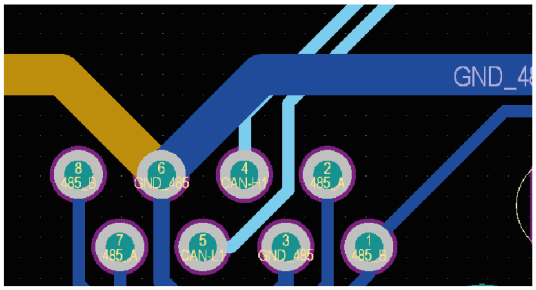

Definition of RJ45 Port Pin for BMS2

No.	RS485 Pin
1	485_B
2	485_A
3	GND_485
4	CAN_H2
5	CAN_L2
6	GND_485
7	485_A
8	485_B

BMS2 Port

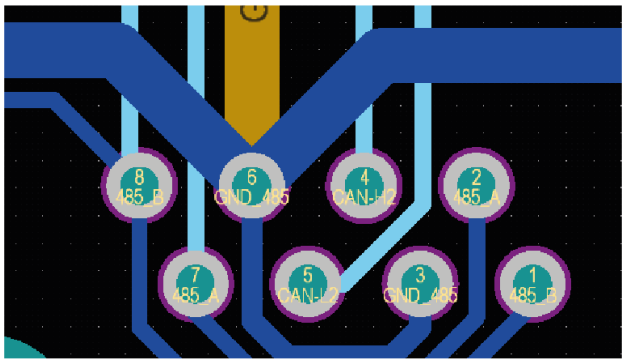

Definition of RJ45 Port Pin for Meter

No.	Meter-485 Pin
1	Meter-485_B
2	Meter-485_A
3	GND_COM
4	Meter-485_B
5	Meter-485_A
6	GND_COM
7	-
8	-

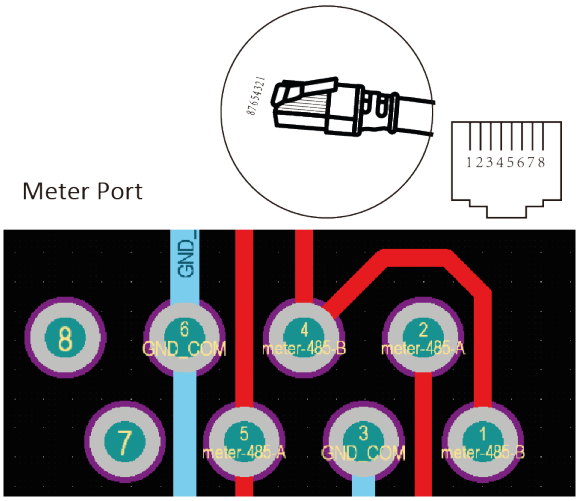

Definition of RJ45 Port Pin for RS485

No.	RS485 Pin
1	Modbus-485_B
2	Modbus-485_A
3	GND_485
4	-
5	-
6	GND_485
7	Modbus-485_A
8	Modbus-485_B

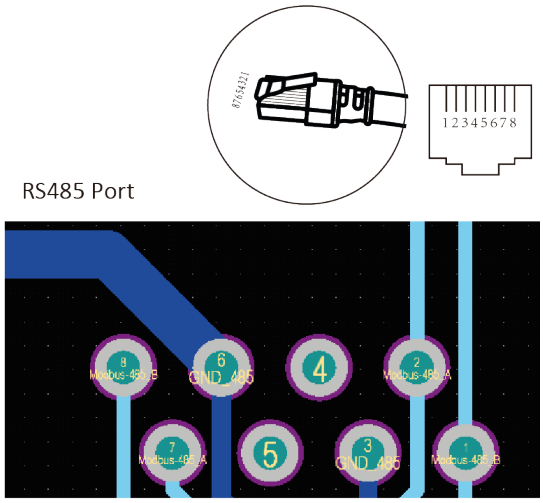

RS232

No.	WIFI/RS232
1	
2	TX
3	RX
4	
5	D-GND
6	
7	
8	
9	12Vdc

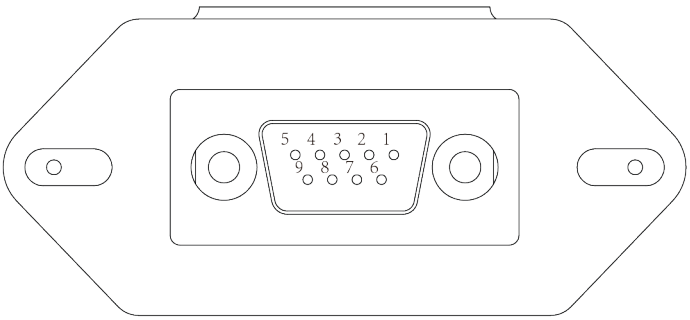

WIFI/RS232

This RS232 port is used to connect the wifi datalogger

APPENDIX B

1. Split Core Current Transformer (CT) dimension: (mm).
2. Secondary output cable length is 4m.

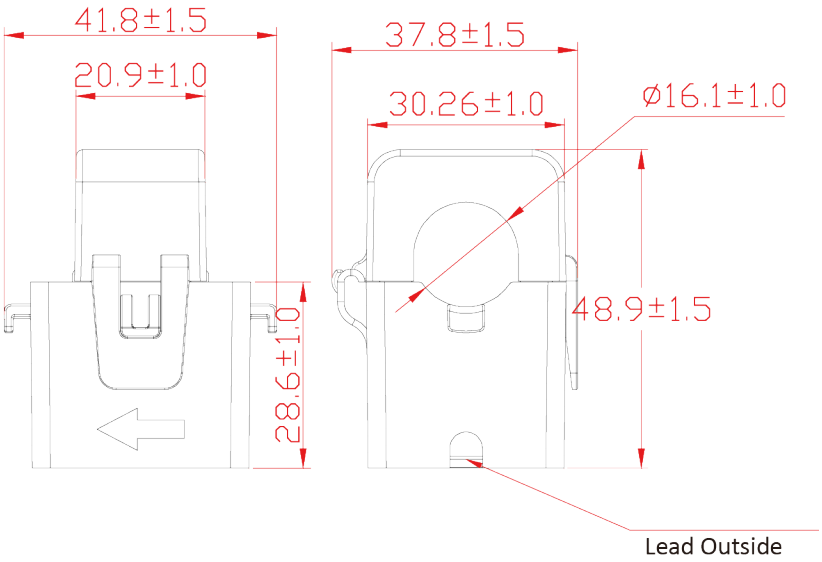

For more information, training videos, software upgrades, help line, forum please refer to http://www.sunsynk.com - Tech Support (Do not forget to register first on the website).

Sunsynk

@energysolutions

@sunsynkofficial

Sunsynk Limited & Global Tech China Ltd,
3 Floor, Wai Yip Industrial Building.
171 Wai Yip Street, Kwun Tong,
Kowloon, Hong Kong.

Tel. HK +852 2884 4318 Fax: +852 2884 4816
Tel. UK +44 151 528 9945
Tel. SA +27 1108 39837

sales@globaltech-china.com

Audio Training manuals on Apple Pod Cast and Spotify.
Full training support, manuals and videos on www.sunsynk.com

SUN SYNK

Global Tech China Ltd

3rd Floor, Wai Yip Street Kwun Tong, Kowloon, Hong Kong

Want to become a distributor? Or want to know more?
Email us: sales@globaltech-china.com Our website: www.sunsynk.com
GT website: www.globaltechchina.com