DATA SHEET



IQ Battery 5P Pedestal Mount

The Pedestal Mount helps install IQ Battery 5P on the ground without wall support. The leg assemblies of the Pedestal Mount are used as the foundation for the IQ Battery 5P. The cover at the bottom of the Pedestal Mount covers the leg assembly to give better aesthetics to the installation.

PRODUCT DETAILS	B05-PI-0550-O
Name	IQ Battery 5P Pedestal Mount
Description	Includes one Pedestal Mount for IQ Battery 5P (Optional accessory. Required only if the battery is floor-mounted)
WHAT'S IN THE BOX	
Pedestal bracket assembly	Two pedestal brackets with legs to mount IQ Battery 5P
Pedestal cover	One Pedestal cover to protect the lower leg portion of the assembly
L bracket	Two L brackets for fixing pedestal cover to the pedestal bracket assembly
Drill template	One drill template for marking drilling points on the floor
Quick install guide	One quick install guide for IQ Battery 5P pedestal mount installation instructions
Fasteners and washers	Fasteners and washers for installing the IQ Battery 5P pedestal mount
ENVIRONMENTAL SPECIFICATIONS	
Operating temperature	-4°F to 131°F (-20°C to 55°C) non-condensing
Enclosure rating of the final installation	Outdoor - IP55/NEMA 3R1
MECHANICAL DATA	
Shipping dimensions (H ×W × D)	7.5 in × 23.6 in × 19.3 in
Shipping weight	24.7 lbs (11.2 kg)
Dimensions with IQ Battery 5P (H ×W × D)	44.6 in × 21.7 in × 11.0 in
Total installed weight (including an IQ Battery 5P unit)	187.95 lbs (85.25 kg)
STANDARDS	
Safety	UL9540A
Seismic	AC156

© 2023 Enphase Energy. All rights reserved. Enphase, the e and CC logos, IQ, and certain other marks listed at https://enphase.com/trademark-usage-guidelines are trademarks of Enphase Energy, Inc. in the US and other countries. Data subject to change.

Front view of IQ Battery 5P mounted on the Pedestal Mount (dimensions in inches)

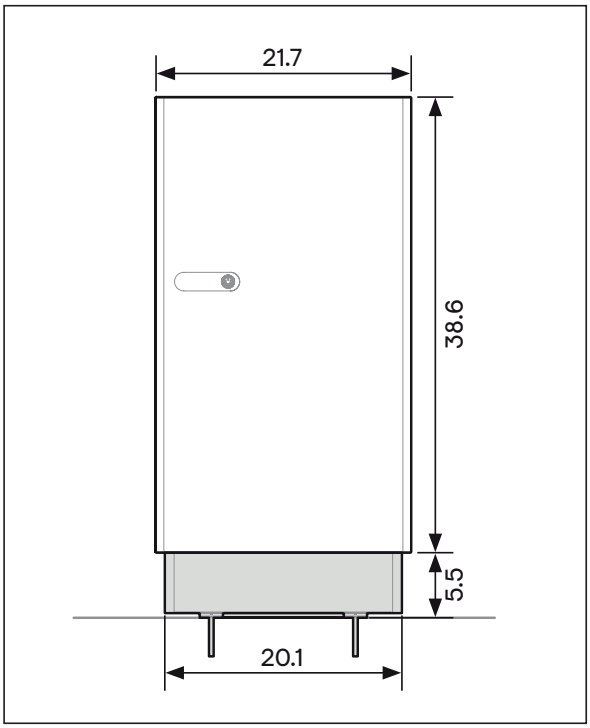

Side view of IQ Battery 5P mounted on the Pedestal Mount (dimensions in inches)

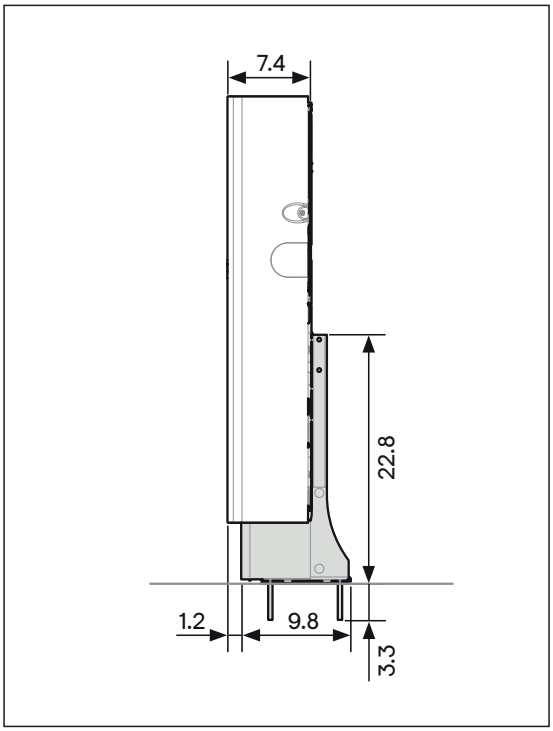

© 2023 Enphase Energy. All rights reserved. Enphase, the e and CC logos, IQ, and certain other marks listed at https://enphase.com/trademark-usage-guidelines are trademarks of Enphase Energy, Inc. in the US and other countries. Data subject to change.

Revision history

REVISION	DATE	DESCRIPTION
DSH-00225-1.0	December 2023	Initial release.

© 2023 Enphase Energy. All rights reserved. Enphase, the e and CC logos, IQ, and certain other marks listed at https://enphase.com/trademark-usage-guidelines are trademarks of Enphase Energy, Inc. in the US and other countries. Data subject to change.