Connecting Strength

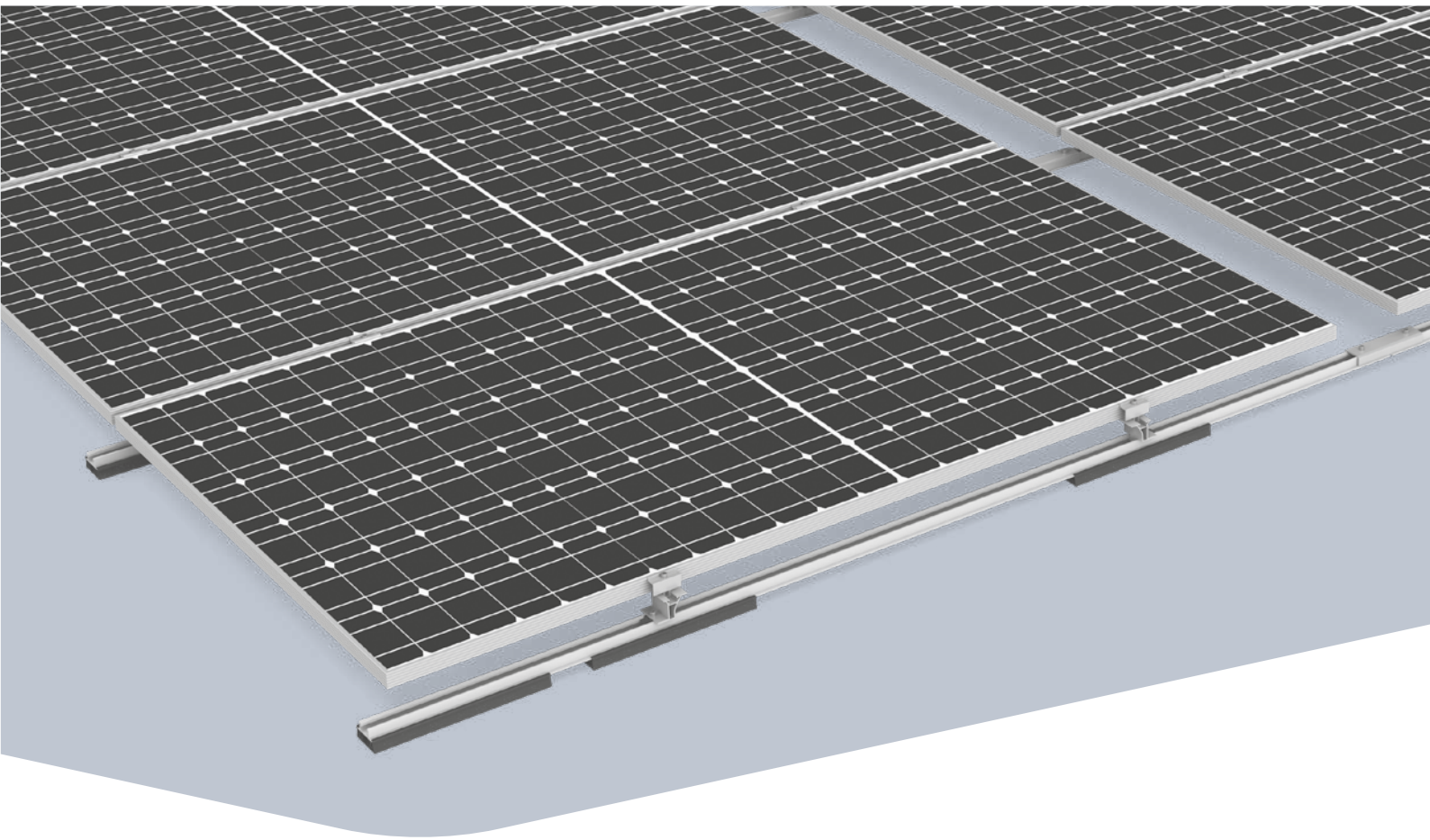

Assembly instructions

Dome Zero System

Content

- **Tools overview** 3
- **General safety information** 4
- **The following guidelines apply** 5
  - Planning with K2 Base 5
  - Roof requirements 5
  - Static requirements 5
  - Important mounting instructions 5
- **Components** 6
  - Base components 6
  - Ballast 8
  - Fixed connection to the roof 9
- **Assembly** 10
  - Installation of module field and thermal separations 10
  - Single Row 13
  - Module assembly 16
  - Dome SpeedPorter 18
  - Dome Porter Flex 20
- **Optional assembly steps** 22
  - Fixed connection with Dome FixPro using base plate or roof anchor 22
  - Cable-Manager 23
  - Module frame earthing with TerraGrif 23

Quality tested - several certifications

K2 Systems stands for secure connections, highest quality and precision. Our customers and business partners have known that for a long time. Independent institutes have tested, confirmed and certified our capabilities and components.

Please find our quality and product certificates under:
k2-systems.com/en/technical-information

Tools overview

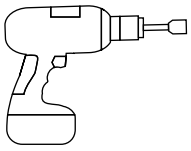

6 mm

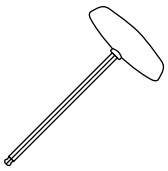

6 mm



6 - 30 Nm
(4.5 - 22.2 lb-ft)

6 mm

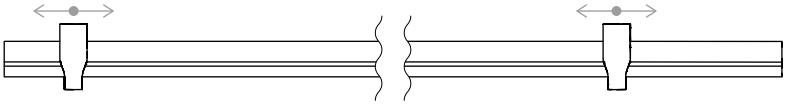

Dome Speed Spacer Large · 2004129
Distance template for module lengths

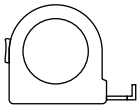

≥ 3.0 m



≥ 6.0 m

Digitale Toolbox

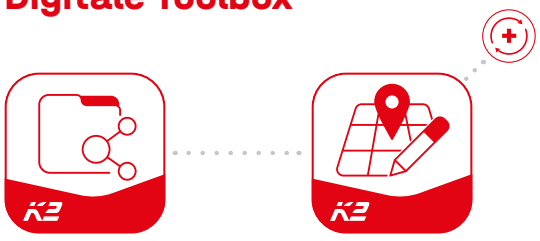

Do you already know our digital services? Use our K2 DocuApp now and record the first important data directly at the customer or project site.

Simply transfer the data to our online planning software K2 Base. Here you can plan your project easily, safely and quickly. You receive a detailed project report with assembly plan and static report. The K2+ interface enables seamless project data transfer to the planning tools of well-known inverter manufacturers or yield planning tools.

With the K2 DocuApp, project documentation is done quickly and easily - without any annoying paperwork.

Get started and register now:

docuapp.k2-systems.com

base.k2-systems.com

General safety information

Please note that our general mounting instructions must be followed at all times and can be viewed online at k2-systems.com

- The equipment may only be installed and operated by qualified and adequately trained installers.
- Prior to installation, ensure that the product complies with on-site static loading requirements.
  For roof-mounted systems, the roof load-bearing capacity must always be checked.
- National and local building regulations and environmental requirements must be adhered to.
- Compliance with health and safety regulations, accident prevention guidelines and applicable standards is required.
  - Protective equipment such as safety helmet, boots and gloves must be worn.
  - Roofing works must be in accordance with roofing regulations utilising fall protection safeguards when eaves height exceeds 3 m.
  - At least two people must be present for the duration of the installation work in order to provide rapid assistance in the event of an emergency.
- K2 mounting systems are continuously developed and improved and the installation process may thereby change at any time. Prior to installation consult our website at www.k2-systems.com/en/technical-information for up-to-date instructions.
  We can send you the latest version on request.
- The assembly instructions of the module manufacturer must be adhered to.
- Equipotential bonding/grounding/earthing between individual parts is to be performed according to country specific standards, as well as national laws and regulations.
- At least one copy of the assembly instructions should be available on site throughout the duration of the installation.
- Failure to adhere to our general safety and assembly instructions and not using all system components, K2 is not liable for any resulting defects or damages. We do not accept liability for any damage resulting in the use of competitor's parts. Warranty is excluded in such cases.
- K2 Systems GmbH reserves the right to exclude liability if our general safety instructions are disregarded or if components of the competition are installed or attached.
- If all safety instructions are adhered to and the system is correctly installed, there is a product warranty entitlement of 12 years! We strongly recommend reviewing our terms of guarantee, which can be viewed at k2-systems.com/en/warranty-terms-and-conditions
  We will also send this information on request.
- Dismantling of the system is performed in reverse order to the assembly.
- K2 stainless steel components are available in different corrosion resistance classes. Each structure or component must be carefully checked for possible corrosion exposure.

The following guidelines apply

This system can be used without further testing by K2 Systems under the following standard conditions. It is also suitable for higher requirements, however if a value exceeds the standard conditions, please contact K2 Systems.

Planning with K2 Base

We recommend our free online software K2 Base for the planning. In five steps, you can plan the right assembly system and get a construction recommendation, parts list and the structural analysis report. Simply register and start planning:
base.k2-systems.com

Roof requirements

- This system can be installed on all common flat roofs with a pressure-resistant substrate and a roof pitch of ≤ 3° without a fixed connection.
- Fixed connection > 3° to ≤ 10°
- The roof surface must be clean and dry. Roof irregularities must be corrected or removed where appropriate.
- In the case of bitumen roofing, the roof waterproofing must be professionally inspected and additional protective measures must be taken if necessary
- The coefficient of friction of the roof must be determined on-site. See video
  k2-systems.com/en/friction-coefficient

Static requirements

- It is essential to check that the roof structure has sufficient residual load capacity and that the pressure capacity of the roof insulation (where present) is not exceeded.
- Suitable for framed modules with a frame height 30 - 50 mm
- Permissible module dimensions:
  length 1640 - 2390 mm, width 950 - 1305 mm

Important mounting instructions

Mounting system

- A minimum distance to the roof edge of 600 mm must be observed.
- The compatibility of the roof covering and the Mat S support pad must be checked.
- An array must consist of at least two elevations must for this mounting system to be properly utilized.
- Ensure a thermal separation (distance between module blocks) in the direction of the base rail and module rows must be maintained:
  - Base rail: 12 m
  - Module row: 16 m
- In the event of exceptional circumstances (such as storms, heavy rain, earthquakes, etc.), the system should be checked by a specialist. Should an inspection find damage or plastic deformation (such as in the module clamp area) the components must be replaced.

Modules and clamping

- Tightening torque of 14 Nm for all module clamps.
- Adhere to module manufacturer recommendations for clamping area and module installation (see module manufacturer instructions). Check whether manufacturer approval is available for clamping on the short module side. See
  k2-systems.com/en/approved-modules-dome-6

General information

- External influences that act on this system are only reflected in the design of the ballast to a limited degree. For instance, unevenness, thermal elongation, moss, water accumulation and ageing of the sheeting cannot be considered, although these factors might also precipitate system displacement under certain circumstances. We therefore recommend regular maintenance of the system or to check whether additional mechanical fastening is necessary.
- It is important to ensure that the rain water flow is not hindered.
- Because of the different orientation of the solar modules, the string and inverter connection must be appropriately observed. It is recommended that the inverters and strings are connected separately.
- On-site general standards and regulations for lightning protection must be observed and consultation with a specialist to create a lightning protection concept is recommended (use lightning protection clamp if necessary).

Components

Base components

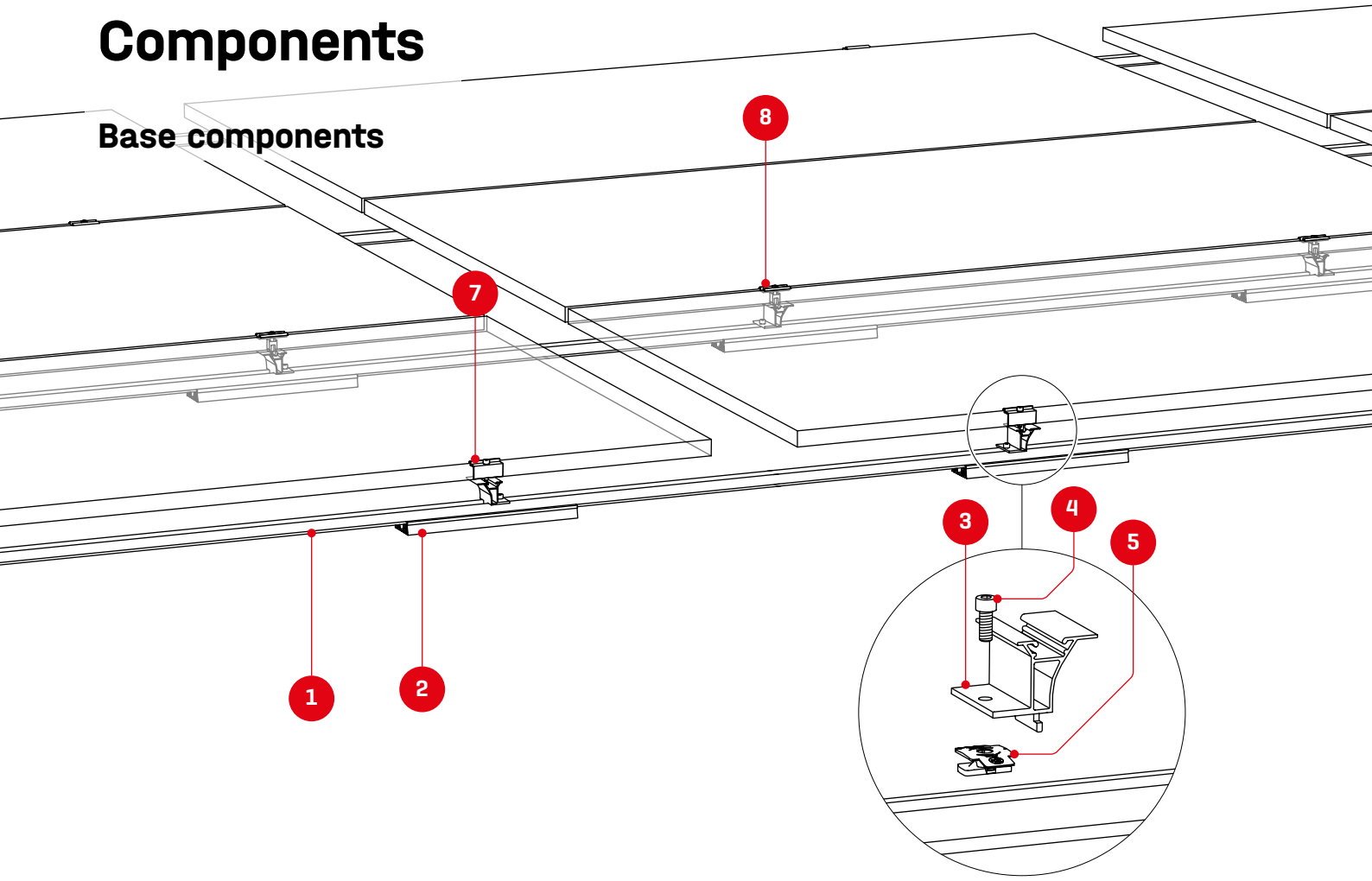

1 Article number system-specific
BasicRail 22

2 2003126
Mat S

3 2003123
Dome Zero Peak

4 1001643 + 2001729
5 **MK2 Slot nut with clip + Allen bolt M8×20**

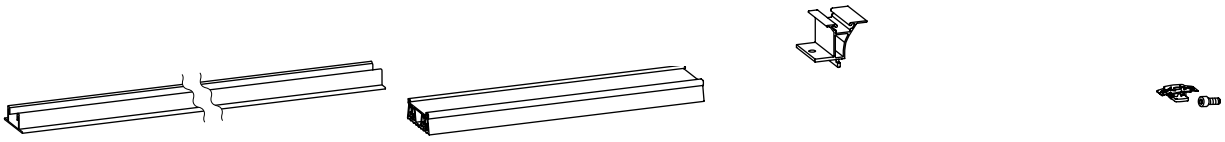

6 1006039
FlatConnector Set

7 **DomeClamp EC**
8 **DomeClamp MC**



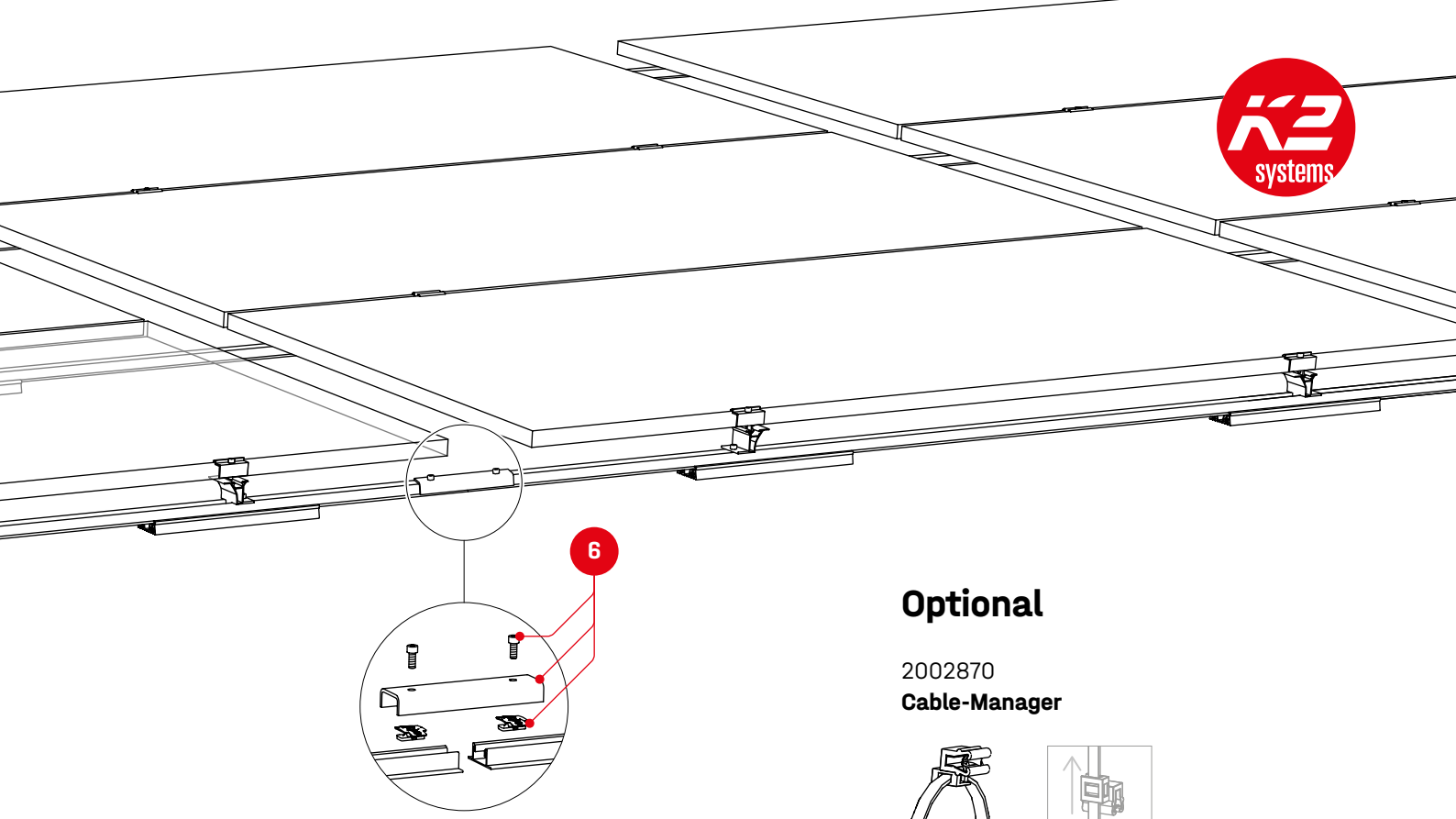

Optional

2002870
Cable-Manager

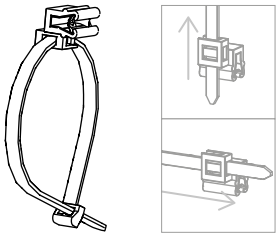

2003542
TerraGrif K2MI Duo 18



2004141
Mat S Tool

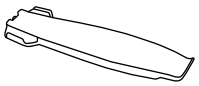

Dome 6 distance template

2004129
Dome Speed Spacer Large

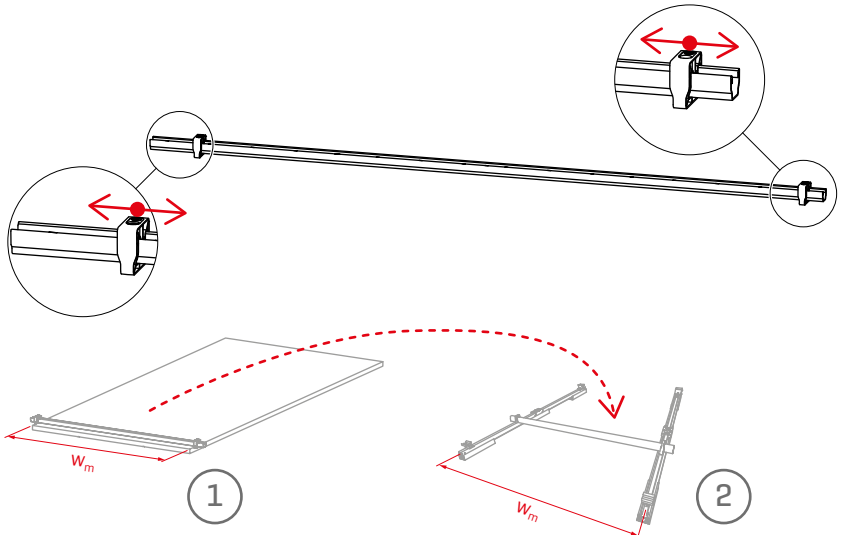

Components

Ballast

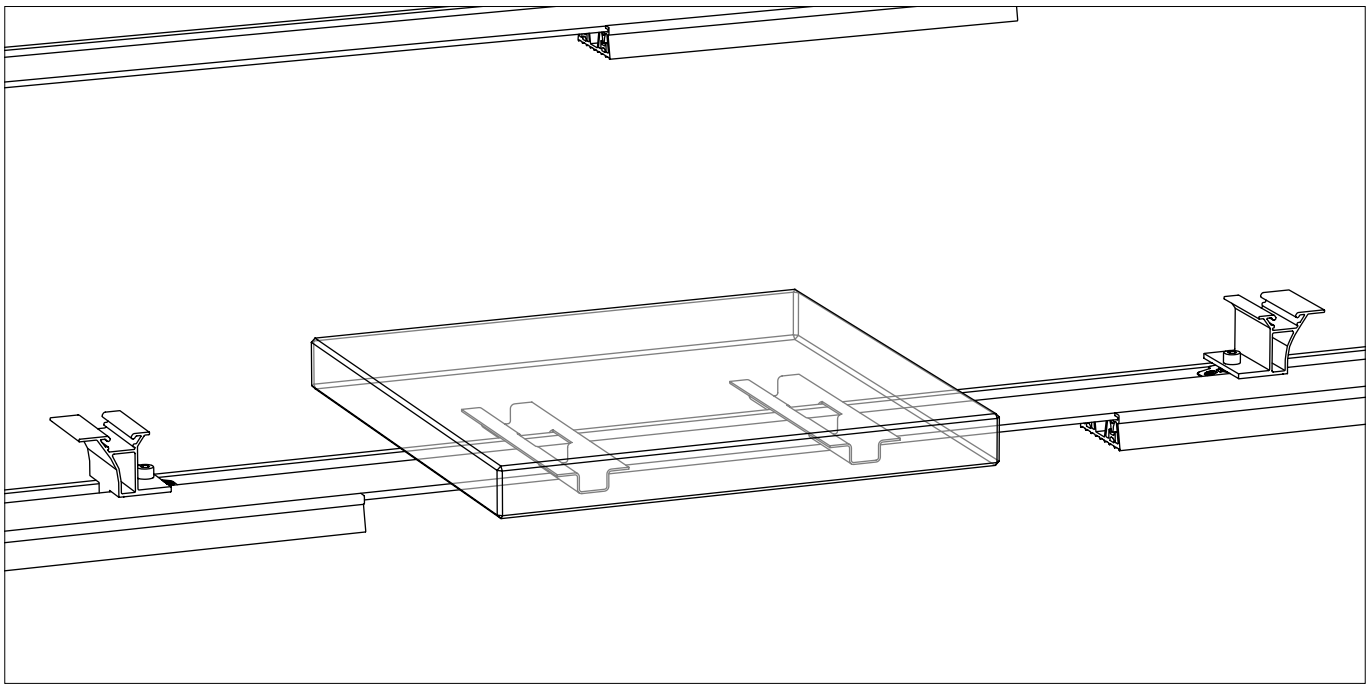

2002300
Dome SpeedPorter

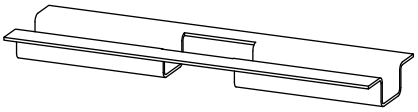

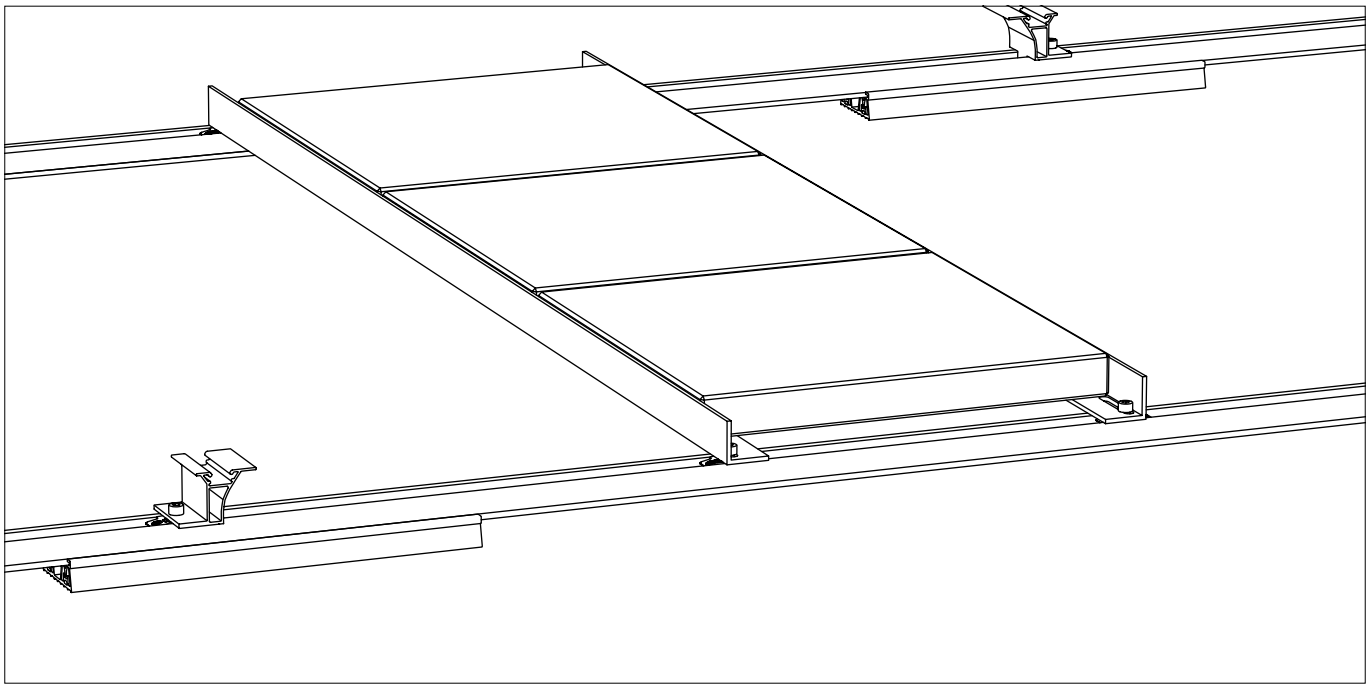

2004157
Dome Porter Flex

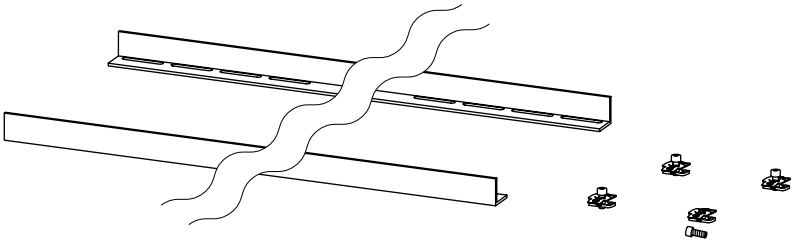

1001643 + 2001729
MK2 Slot nut with clip + Allen bolt M8×20

Fixed connection to the roof

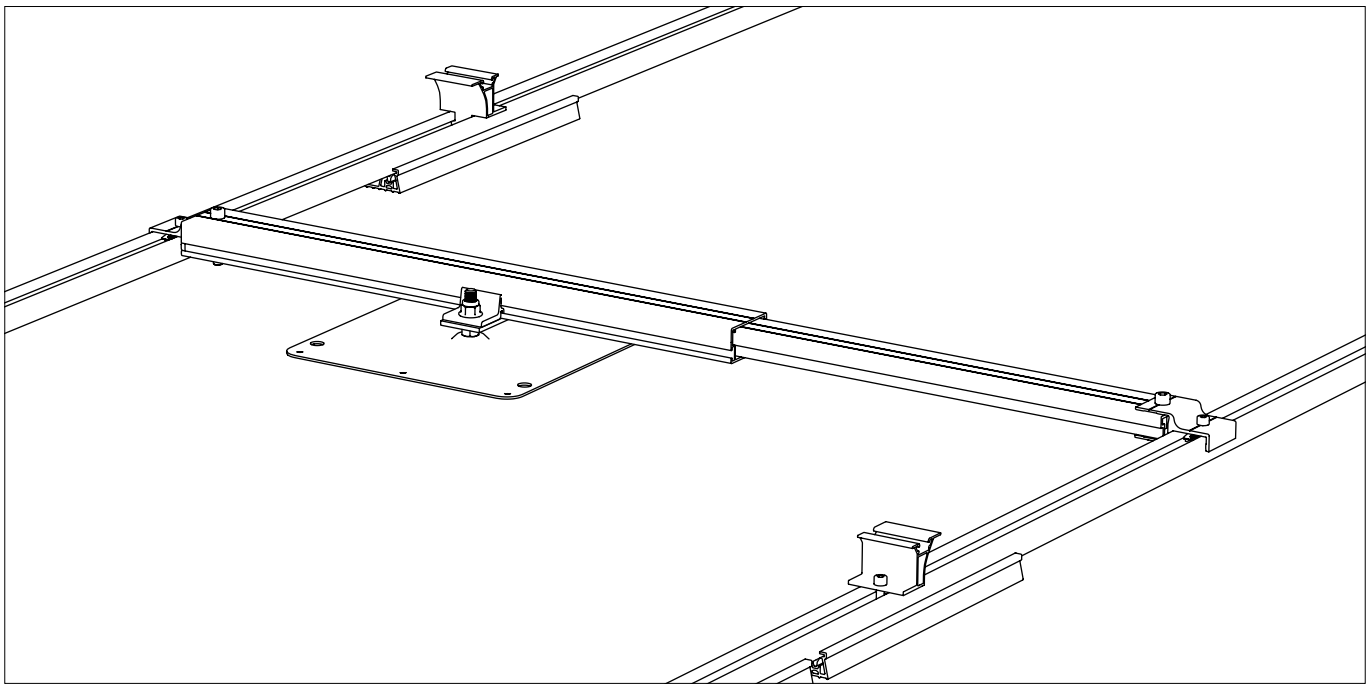

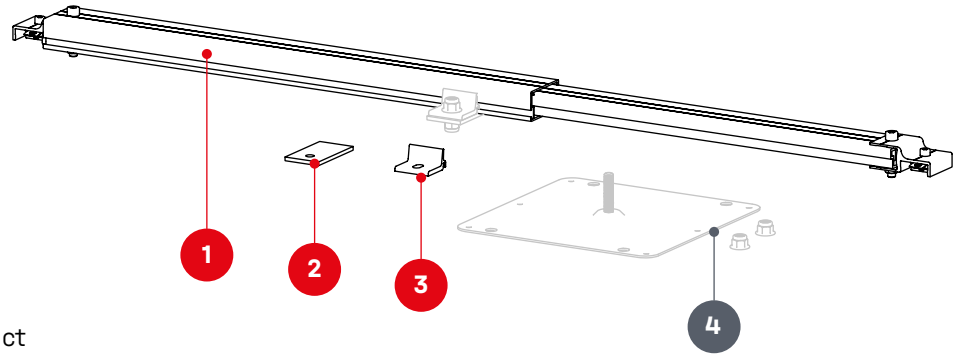

1 2003384
Dome FixPro S

2 2002546
Adapter plate M10

3 2003146
Climber M10

4 **Roof anchor plate**
Not included in the K2 product portfolio.
Other fastening elements (e.g. screws and nuts) for fixing to the fastener must be provided by the customer.

Assembly

Installation of module field and thermal separations

Important dimensions for module fields and thermal separations

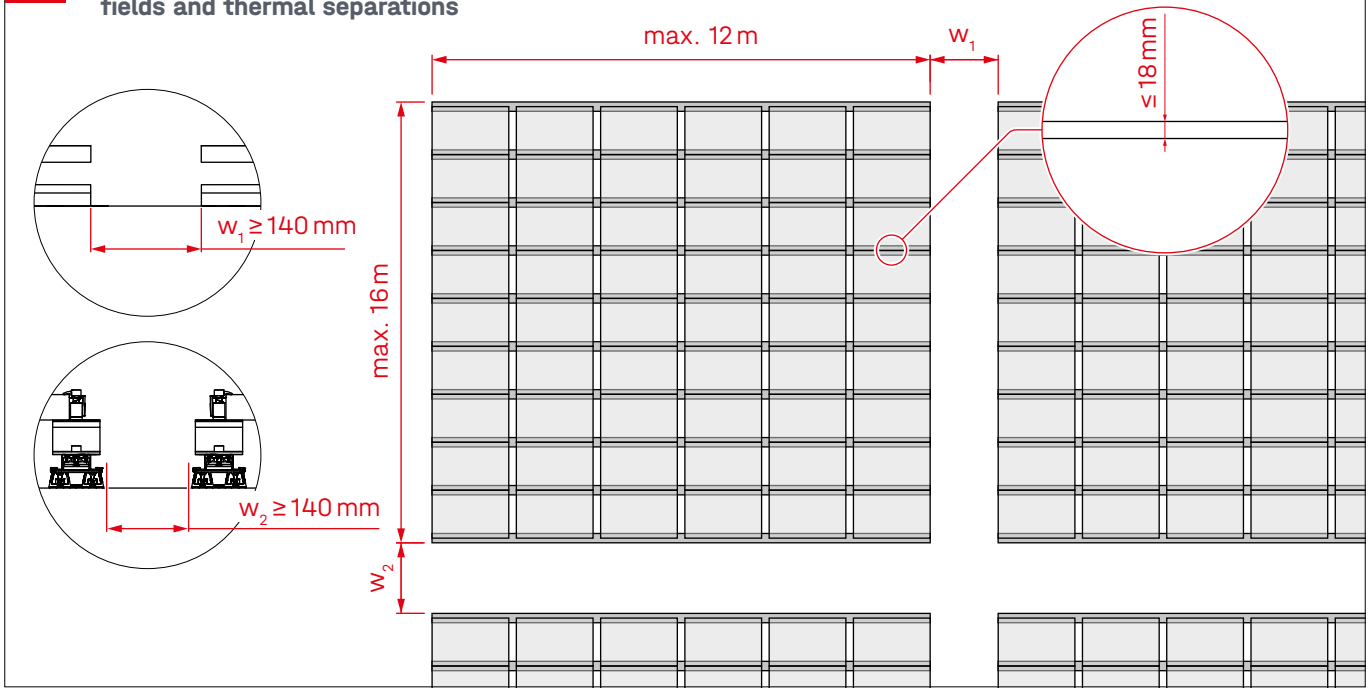

1

To measure the distances between mounting rails, set the the Dome SpeedSpacer with the narrow ends of the measuring clamps to the distance D_R.

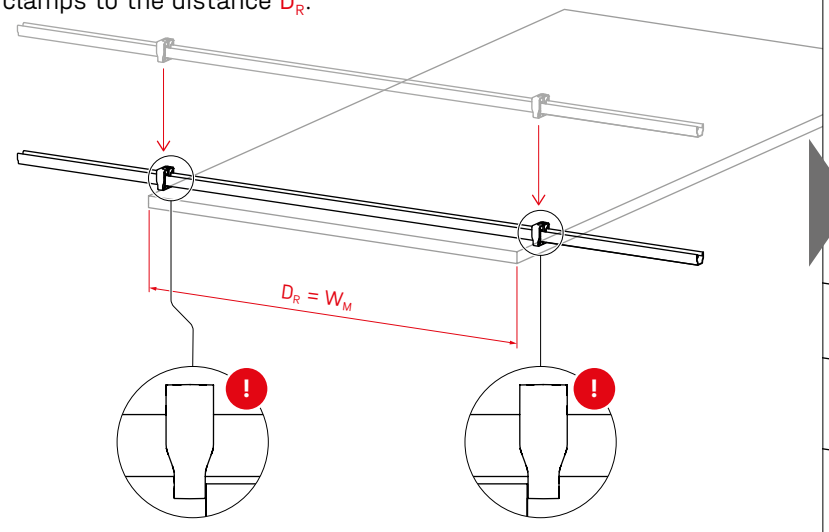

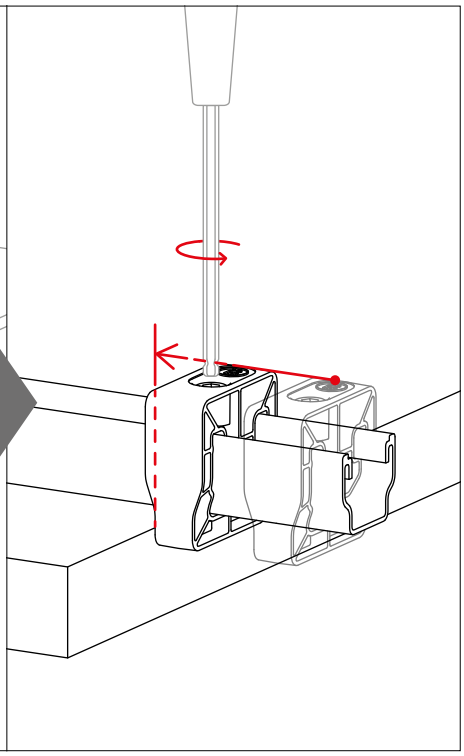

2

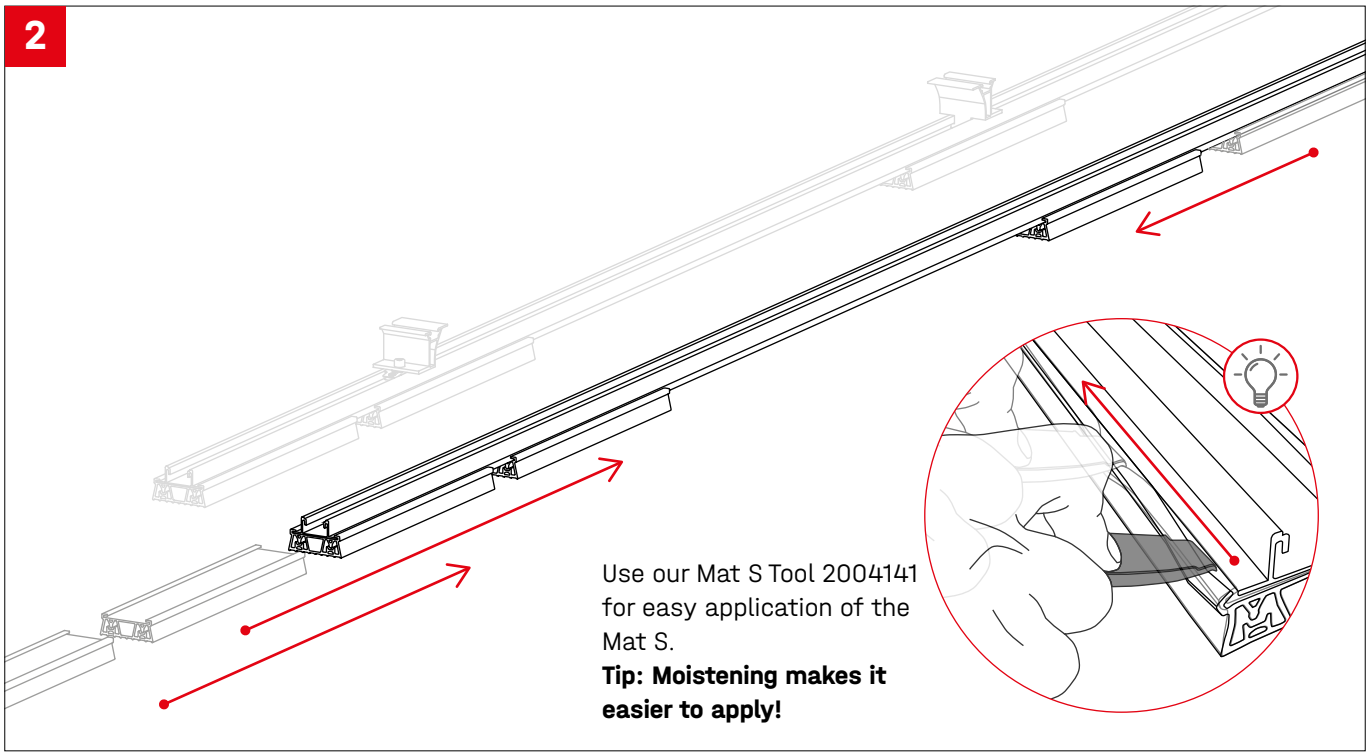

Use our Mat S Tool 2004141 for easy application of the Mat S.
Tip: Moistening makes it easier to apply!

3

! 14 Nm

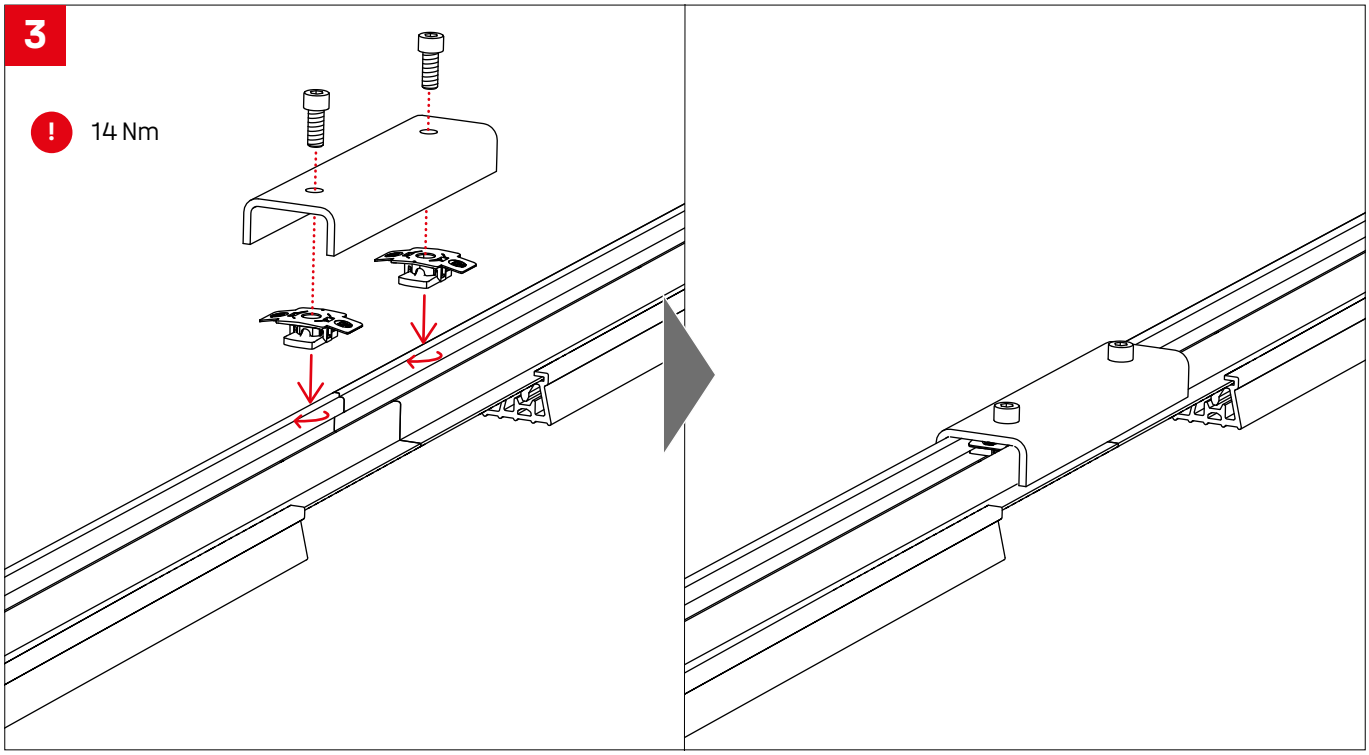

4

Place the rail types according to the Base installation plan.

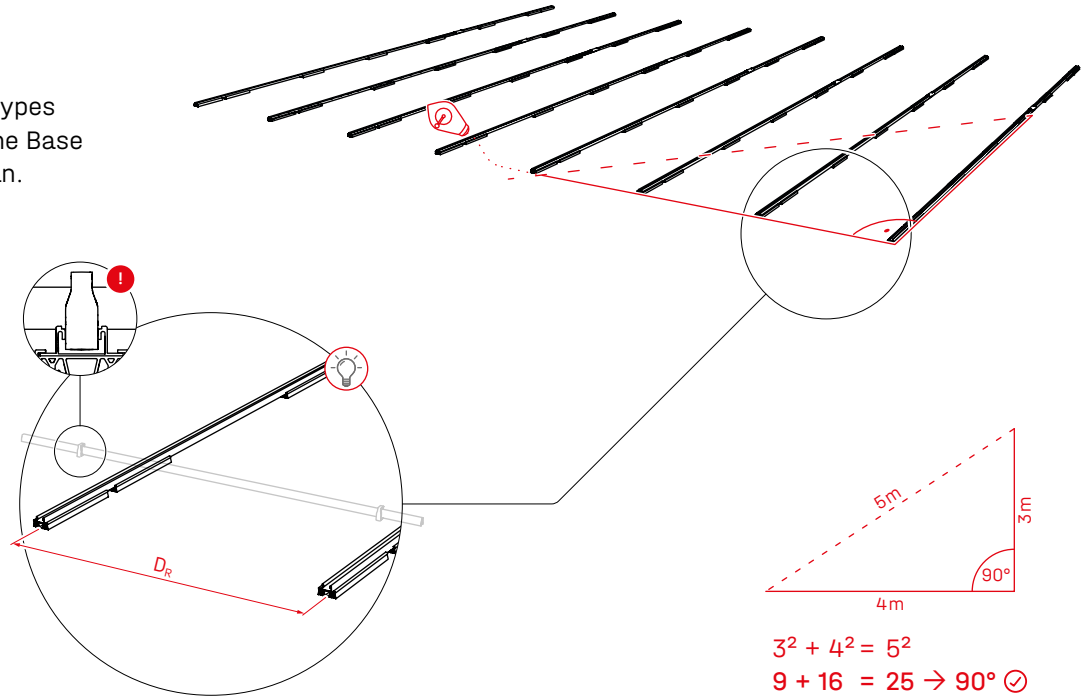

5a

K2 Base automatically calculates the pre-assembly dimensions D_S and D_P and outputs them in the assembly plan. These must be adhered to during assembly.

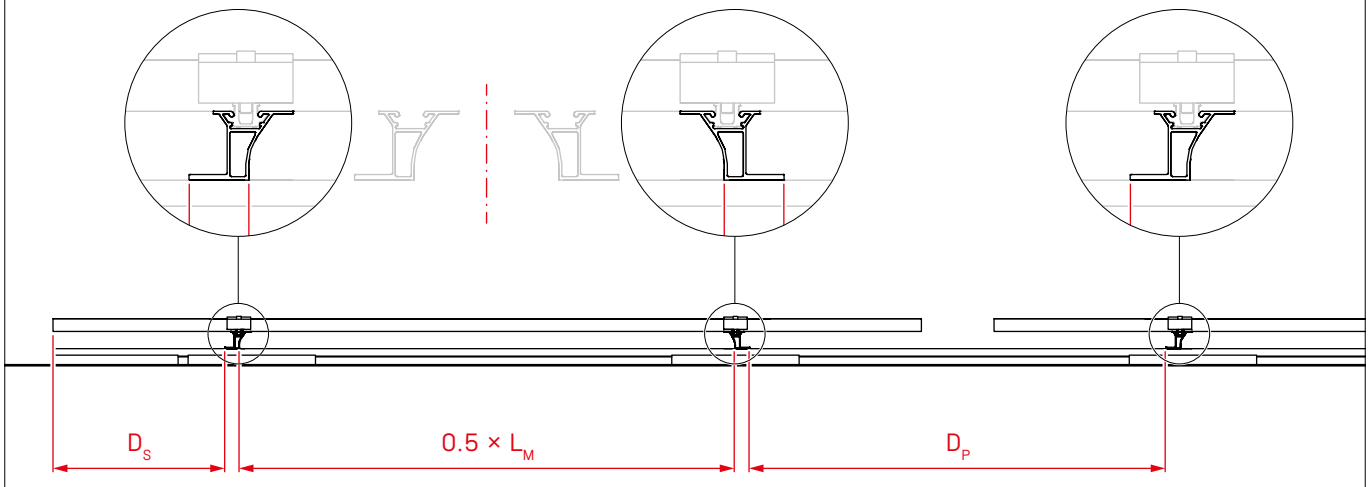

Single Row

5b

! K2 Base automatically calculates the pre-assembly dimension D_S and outputs it in the assembly plan. This must be adhered to during assembly.

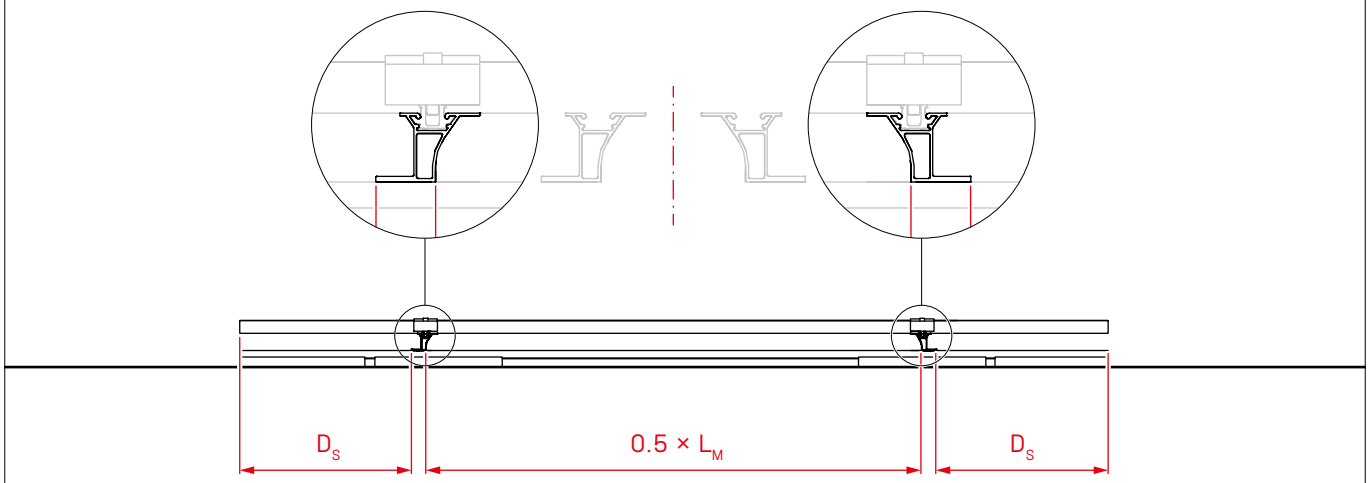

6

! 14 Nm

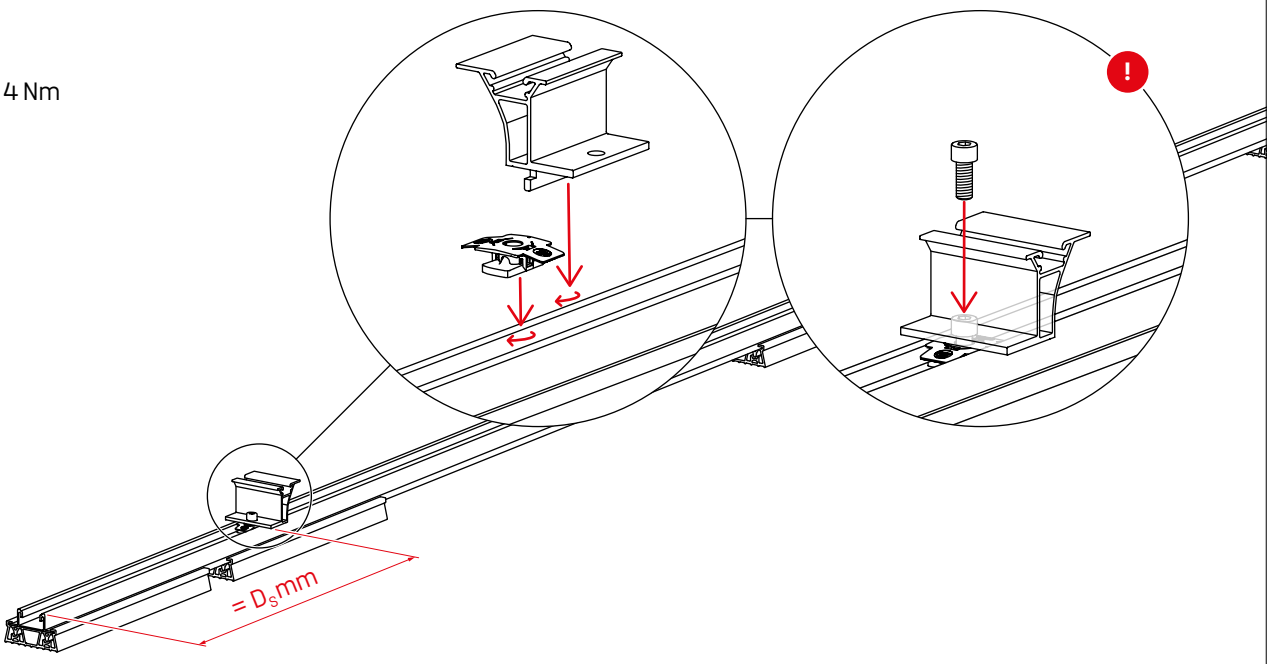

4

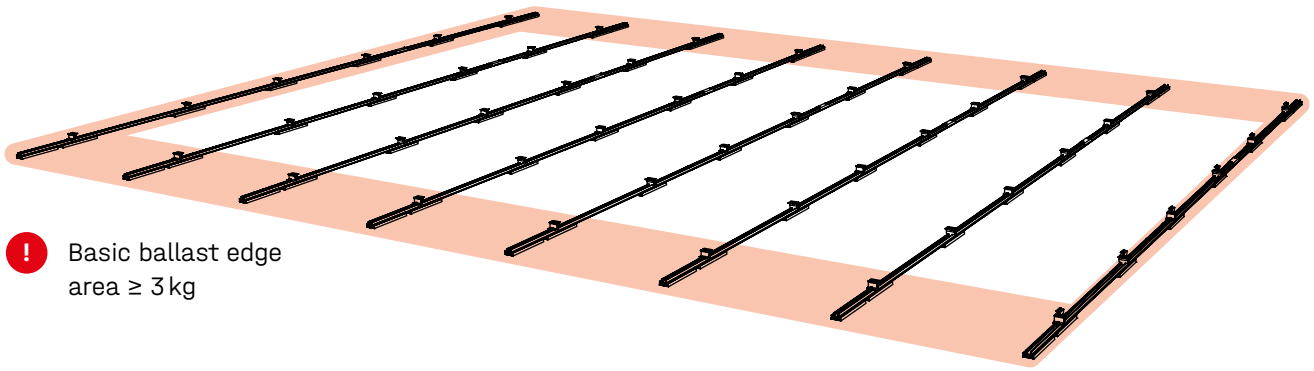

! Basic ballast edge
area ≥ 3 kg

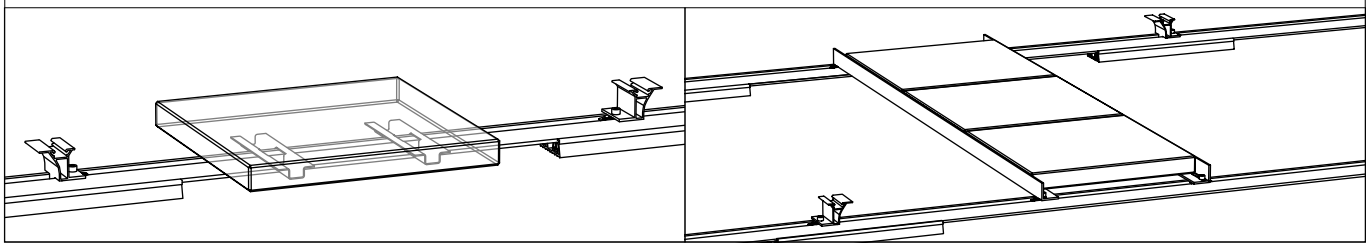

Module assembly

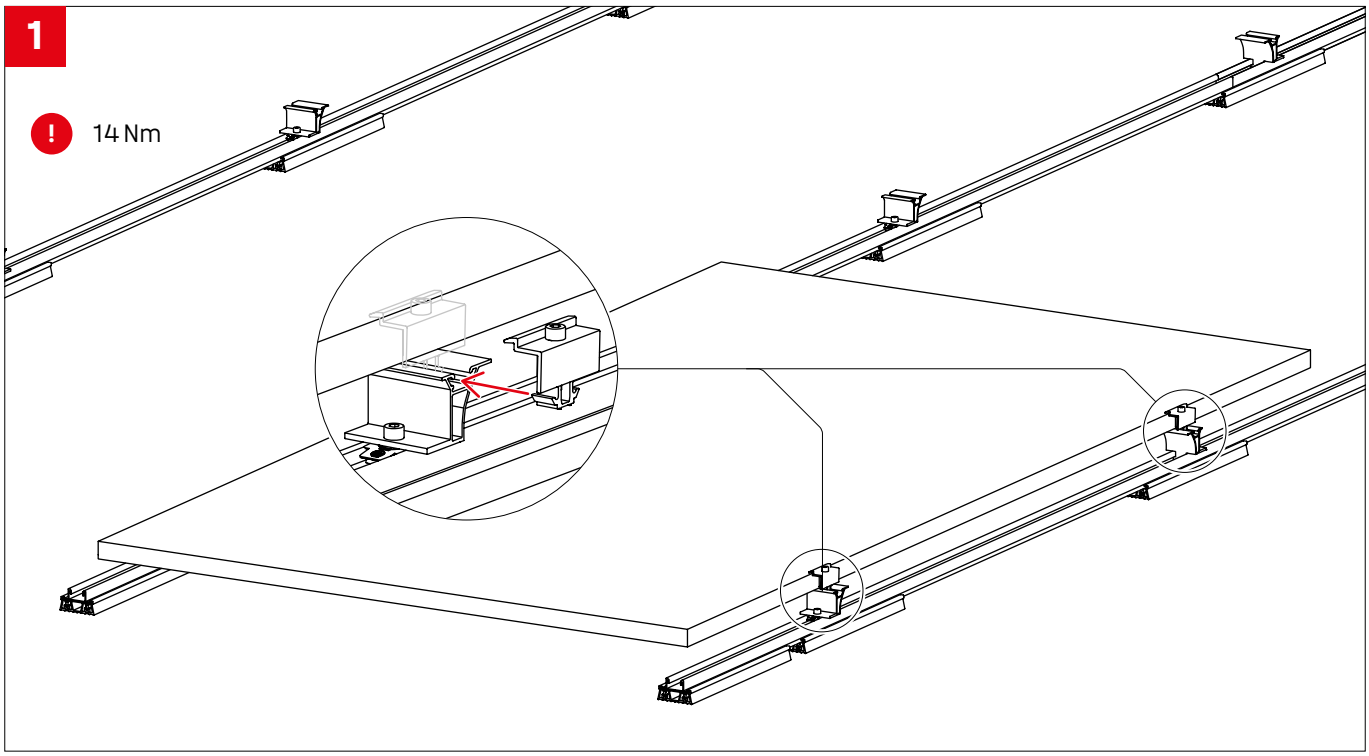

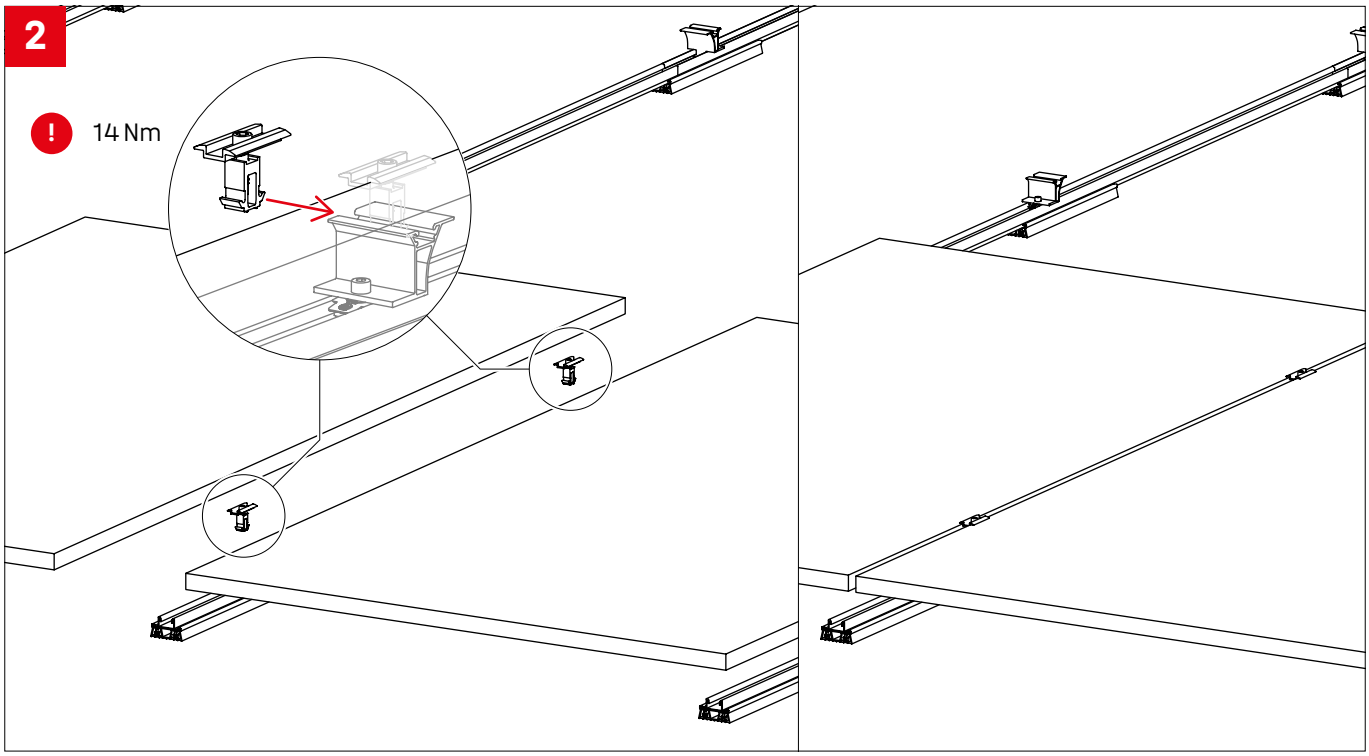

3

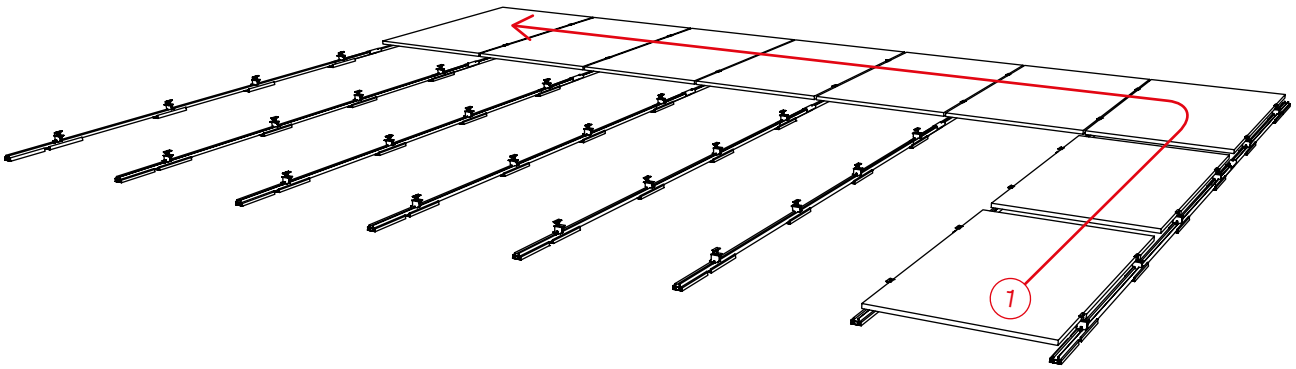

4

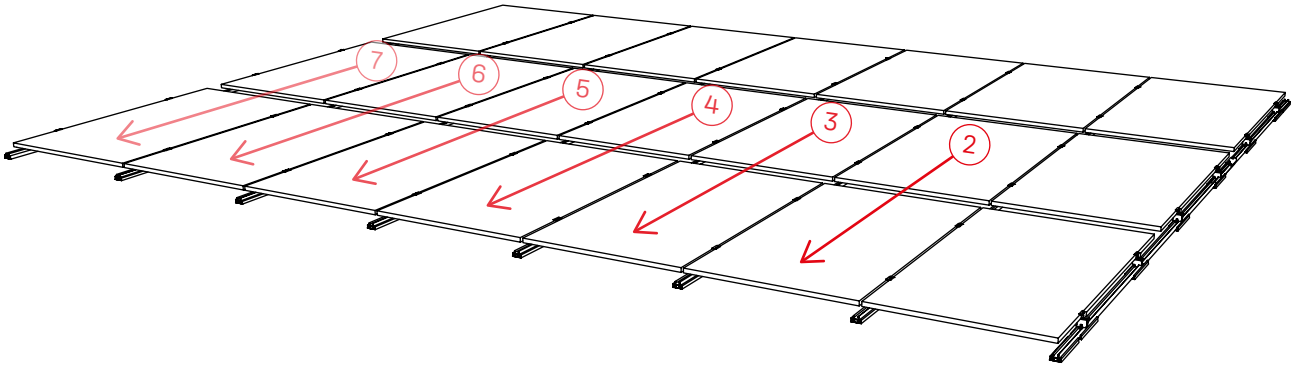

Ballasting options

Dome SpeedPorter

A1

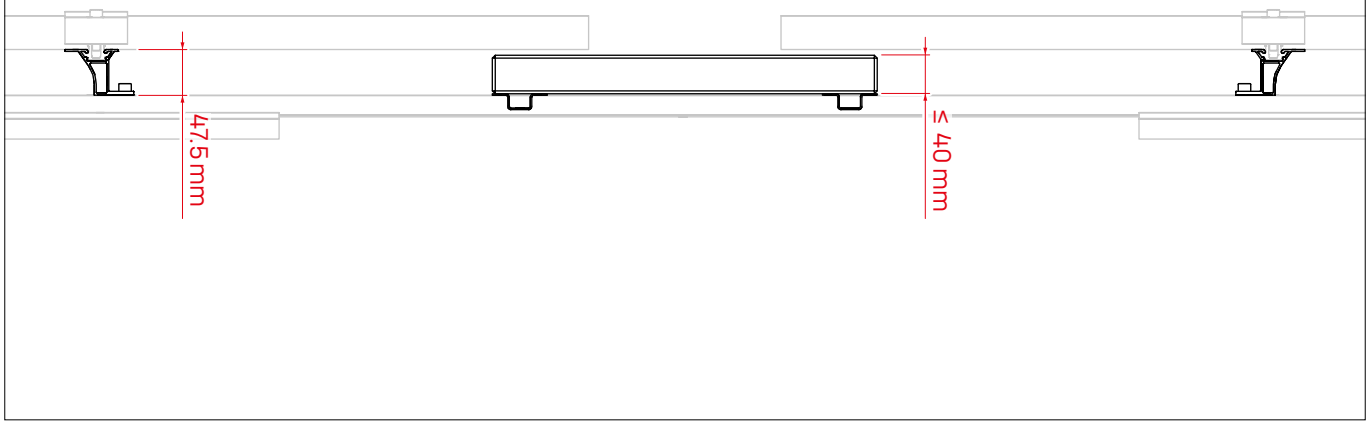

A2

! Start ballasting near the Dome Zero Peaks

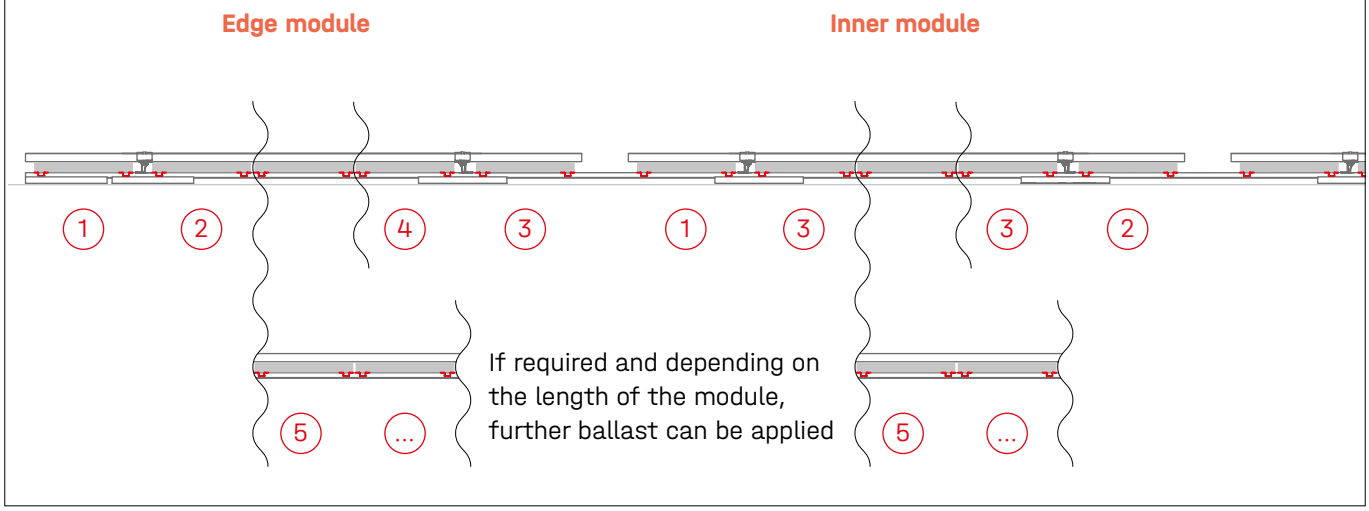

A3

! ≤ 40 kg

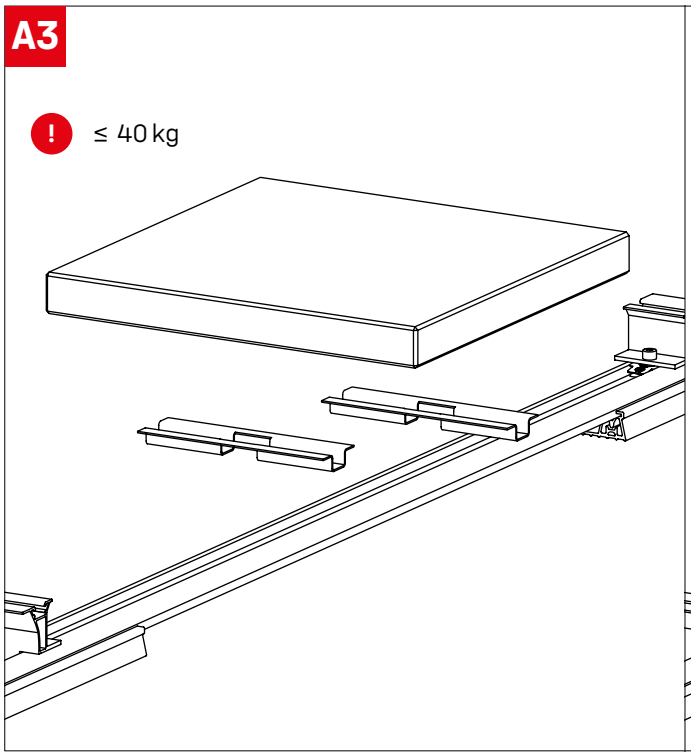

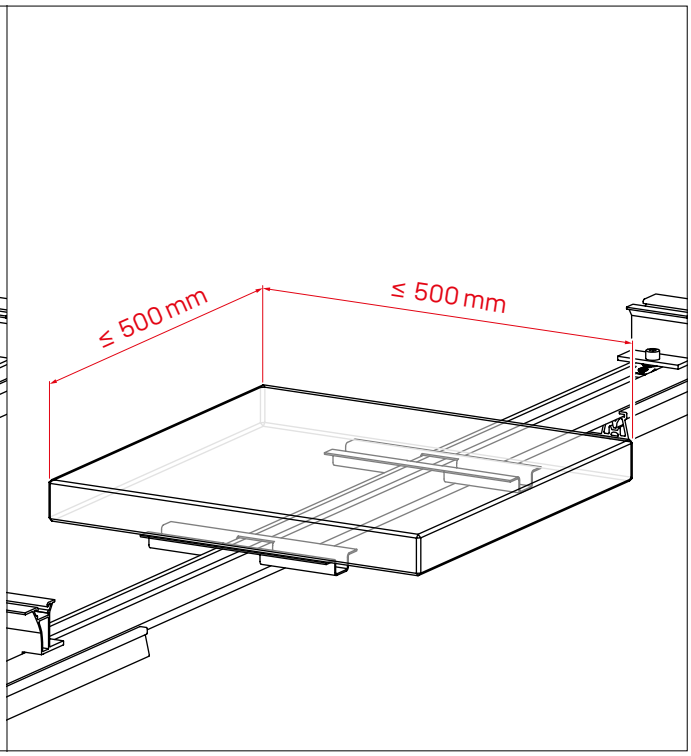

Dome Porter Flex

A1

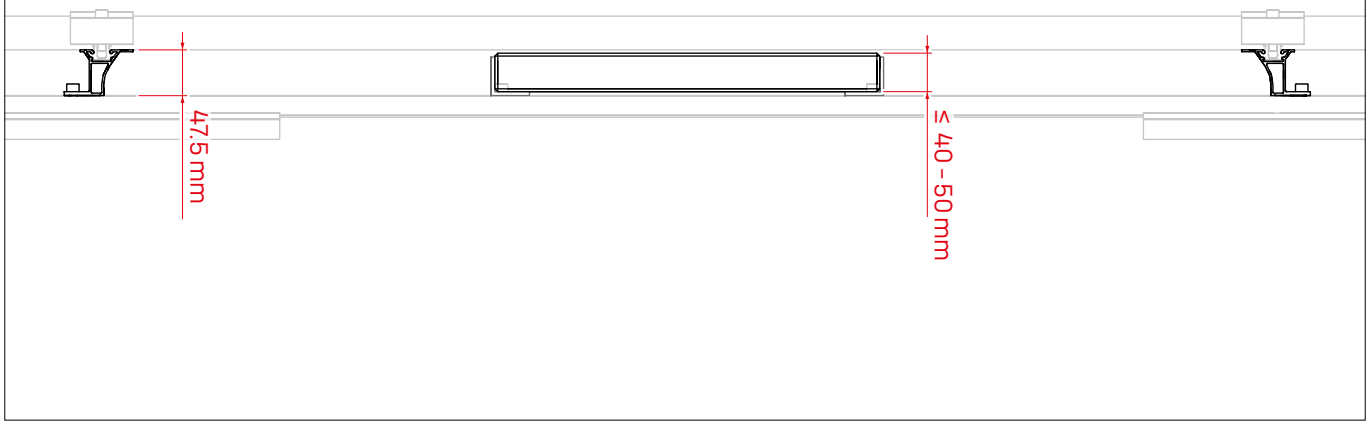

A2

! Start ballasting near the Dome Zero Peaks

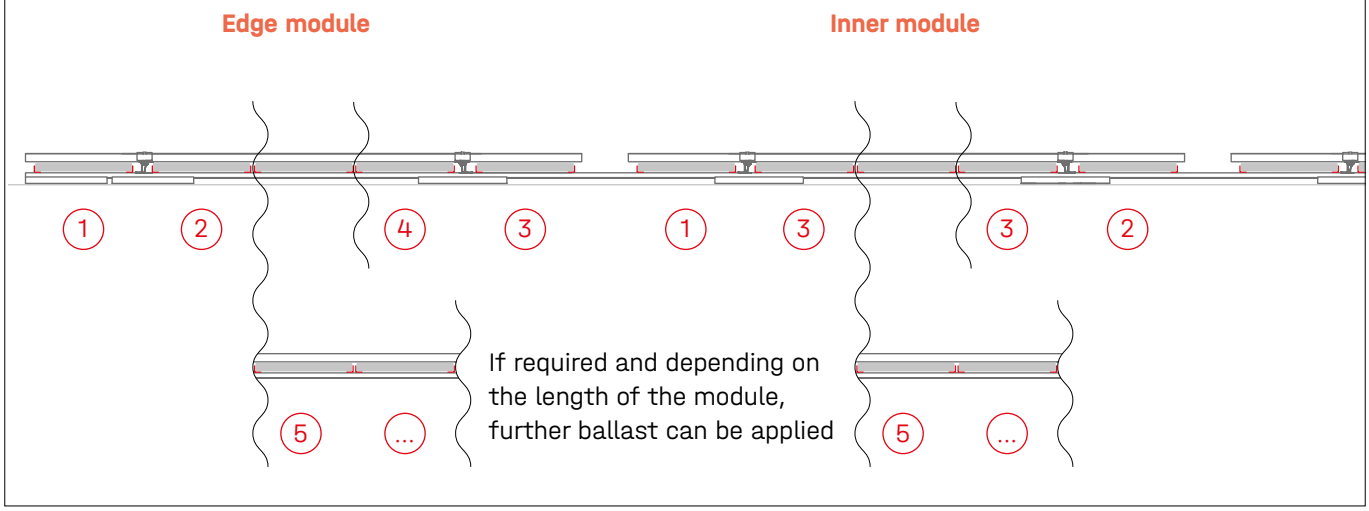

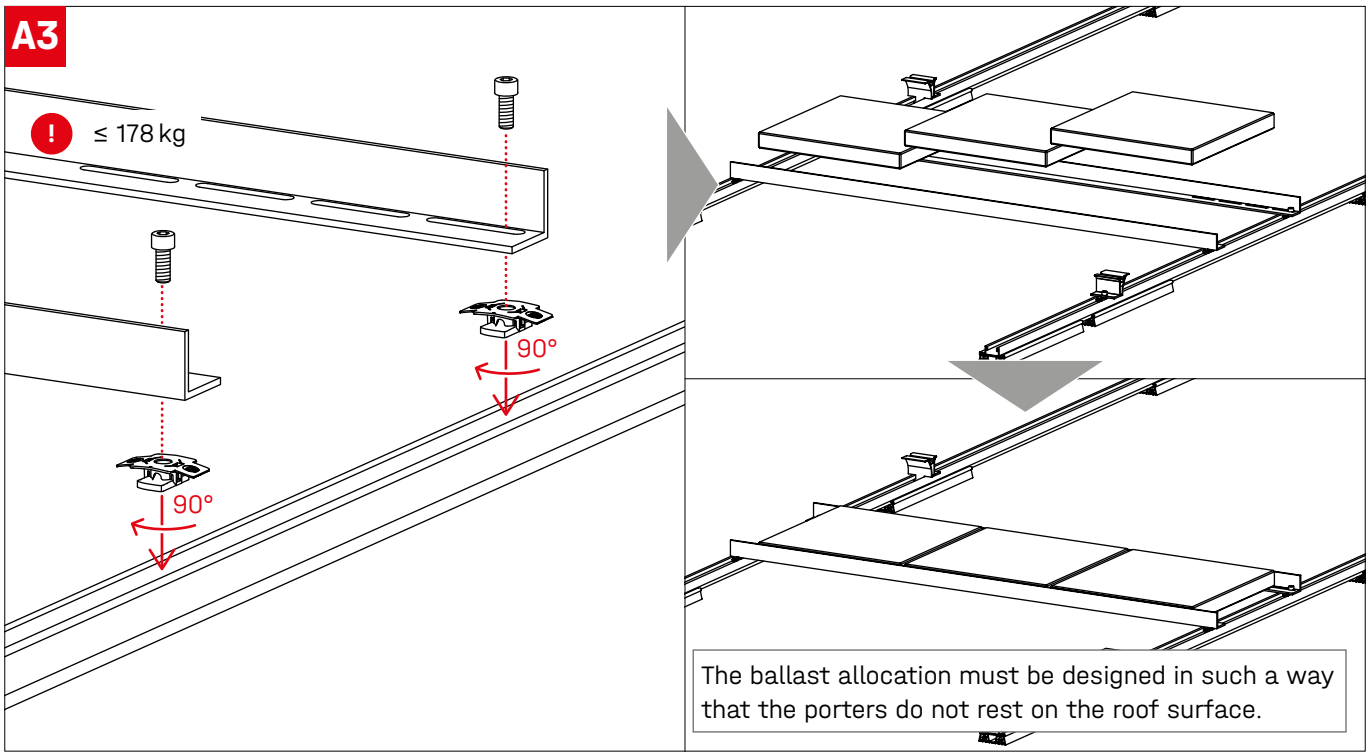
A3
≤ 178 kg
90°
90°
The ballast allocation must be designed in such a way that the porters do not rest on the roof surface.

Optional assembly steps

Fixed connection with Dome FixPro using base plate or roof anchor

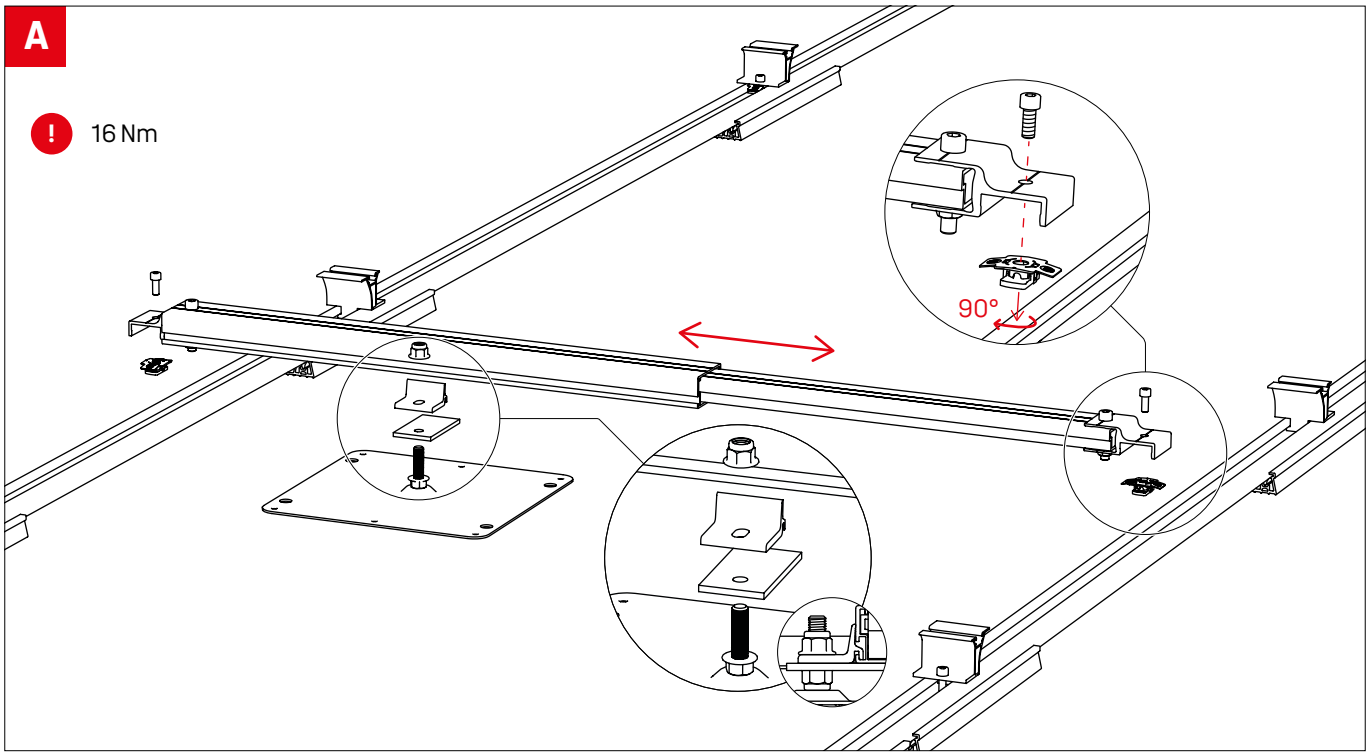

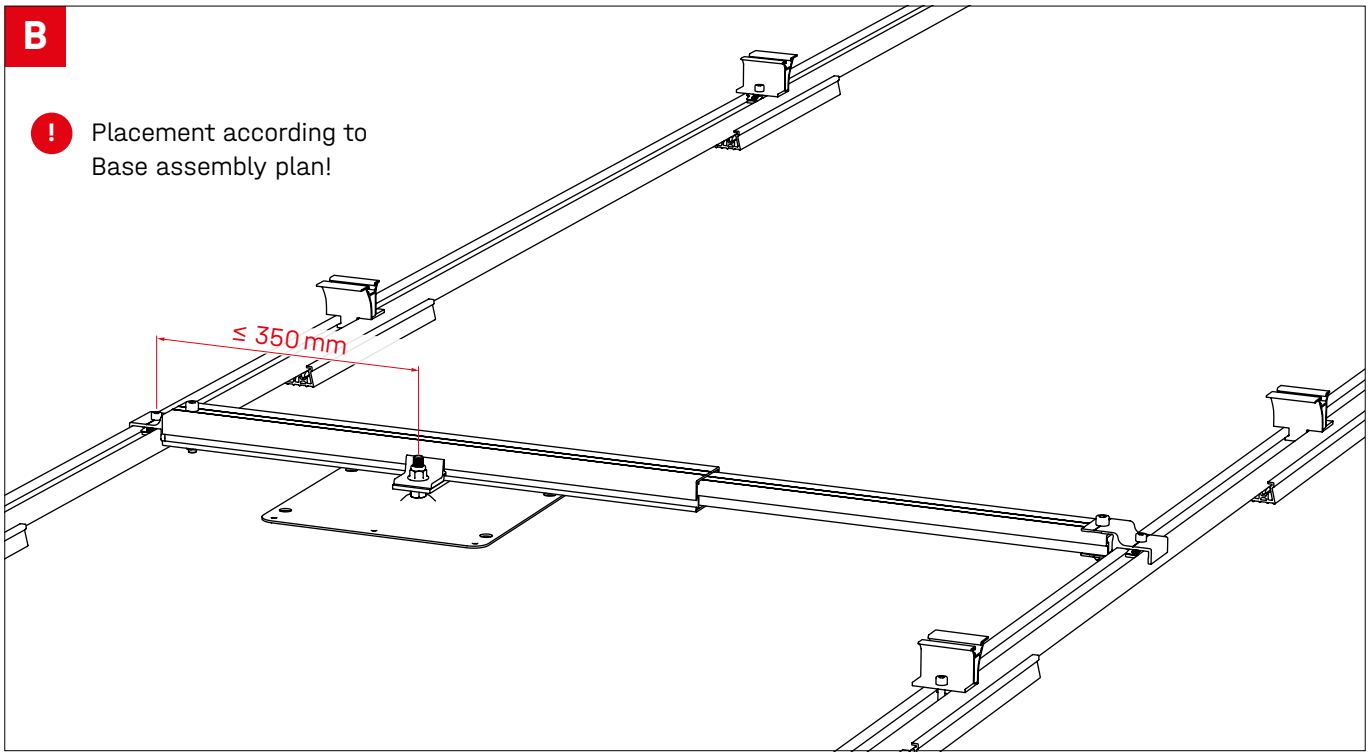

Cable-Manager

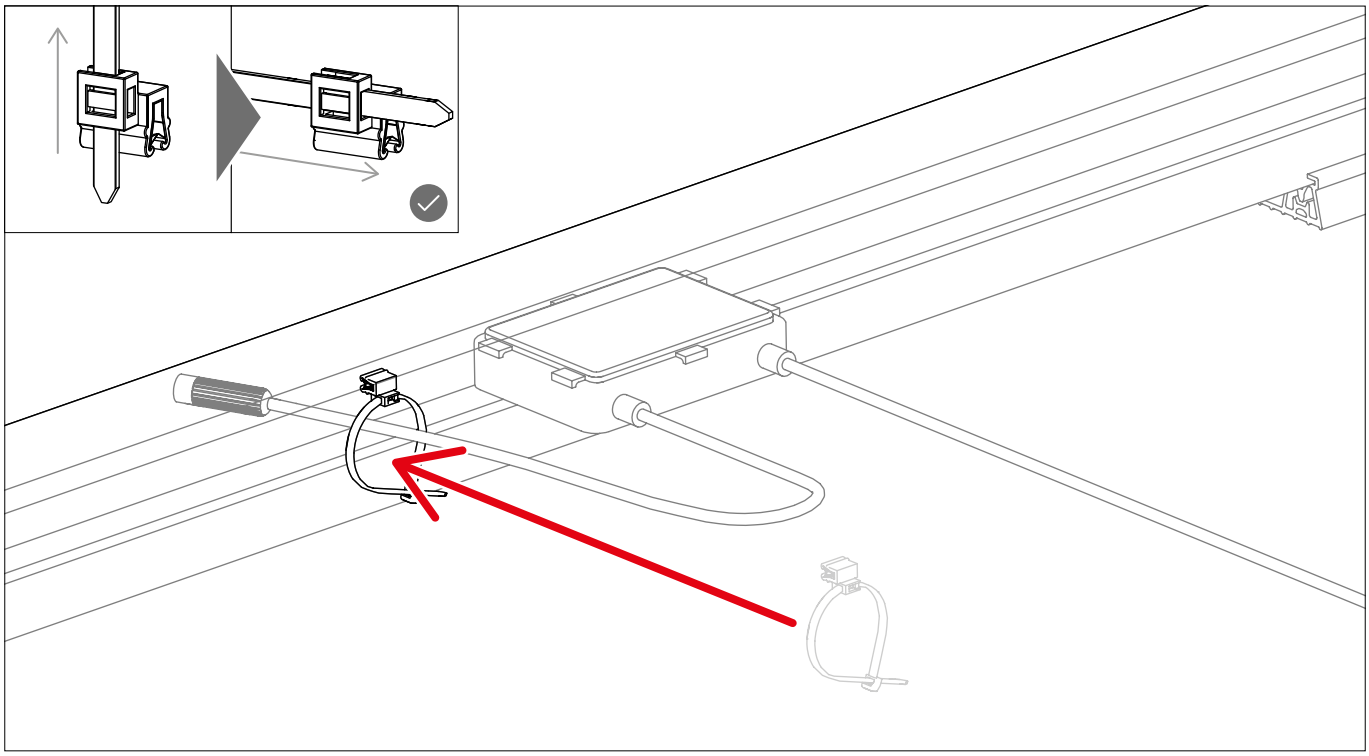

Module frame earthing with TerraGrif

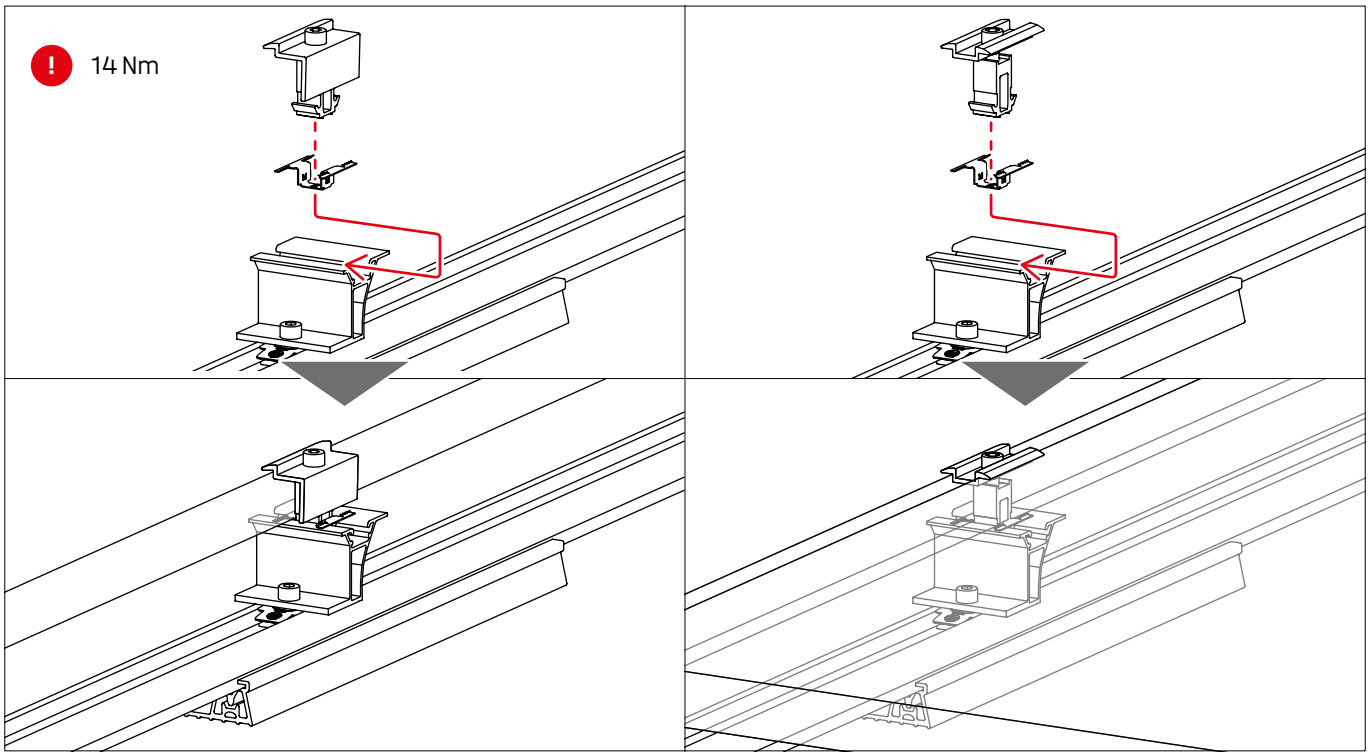

Connecting Strength

Thank you for choosing a K2 mounting system.

Mounting ystems from K2 Systems are quick and easy to install. We hope these instructions have helped. Please contact us with any questions or suggestions for improvement. Our contact data:

- **k2-systems.com/en/contact**
- **Service Hotline: +49 (0)7159 42059-0**

Our General Terms of Business apply. Please refer: k2-systems.com

K2 Systems GmbH
Haldenstraße 1 · 71272 Renningen · Germany
+49 (0) 7159 - 42059 - 0 · info@k2-systems.com · k2-systems.com

Dome Zero Assembly EN V1 | 0426 · Subject to change
Product illustrations are exemplary and may differ from the original.