IQ Cable and accessories

The Enphase IQ Cabling and accessories are part of the Enphase Energy System. These products support fast, simple, and reliable installations. The IQ Cable is a UV-resistant, 2.5 sq. mm cable gauge, continuous length cable with pre-installed connectors for IQ Series Microinverters. Accessories such as connectors, cable clips, sealing caps, and a disconnect tool simplify installation.



IQ Cabling and Raw IQ Cable specifications	
Voltage rating	600 V (connector rating up to 250 V)
IQ Cable temperature rating	-40°C to 90°C wet/dry
Connector temperature rating	-40°C to 85°C
UV exposure rating	1008h ≤±30%, according to IEC60068-2-5
Environmental protection rating	IEC 60529 IP67
Compliance	RoHS, OIL RES I, CE
IQ Cable type	H07BQ-F
Cable flame rating	According to IEC 60332-1-2
IQ Cable AC connector IQ Terminator cap	Certified to IEC 61984
IQ Cable outer diameter	Single-phase IQ Cable: 10.3 ± 0.3 mm Multi-phase IQ Cable: 12.3 ± 0.4 mm
Minimum bending radius	Single-phase IQ Cable: 5 cm Multi-phase IQ Cable: 6 cm
Conductor resistance @20°C Conductor resistance @85°C	7.98 Ω/km 9.75 Ω/km

Simple

- Lightweight and compact with plug-and-play connectors
- Both single-phase and multiphase options available
- Fast installation with simple two-wire cabling (single-phase) or four-wire cabling (multi-phase)
- Cable numbering and plug-and-play connectors for quick installation and simplified cable management

© 2026 Enphase Energy. All rights reserved. Enphase, the e and CC logos, IQ, and certain other marks listed at https://enphase.com/trademark-usage-guidelines are trademarks of Enphase Energy, Inc. in the U.S. and other countries. Data subject to change.

IQ Cabling types/ordering options								
Model number	Phase	Conductors cross-sectional area	Manufacturer rated current @25°C	Cable length between connectors	PV module orientation	Connectors per box	Weight per connector[1]	Box dimensions (mm)
Q-25-10-240	Single-phase	2 × 2.5 mm^2	25 A	1.3 m	Portrait	240	0.23	750 × 575 × 610
Q-25-17-240	Single-phase	2 × 2.5 mm^2	25 A	2.0 m	Landscape	240	0.32	975 × 575 × 610
Q-25-20-200	Single-phase	2 × 2.5 mm^2	25 A	2.3 m	Landscape	200	0.35	975 × 575 × 610
Q-25-10-3P-200	Multi-phase	4 × 2.5 mm^2	25 A	1.3 m	Portrait	200	0.35	977 × 575 × 610
Q-25-17-3P-160	Multi-phase	4 × 2.5 mm^2	25 A	2.0 m	Landscape	160	0.5	979 × 575 × 610
Q-25-20-3P-160	Multi-phase	4 × 2.5 mm^2	25 A	2.3 m	Landscape	160	0.57	981 × 575 × 610
Q-25-RAW-300	Single-phase	2 × 2.5 mm^2	25 A	Raw IQ Cable single-phase is a 300 m reel of 2 × 2.5 mm^2 IQ Cable with no connectors. Raw IQ Cable single-phase spool dimensions: 500 mm × 200 mm × 400 mm				
Q-25-RAW-3P-300	Multi-phase	4 × 2.5 mm^2	25 A	Raw IQ Cable multi-phase is a 300 m reel of 4 × 2.5 mm^2 IQ Cable with no connectors. Raw IQ Cable multi-phase spool dimensions: 500 mm × 200 mm × 400 mm				

NOTE: Manufacturer rated current @70°C: single-phase IQ Cable - 20 A; multi-phase IQ Cable - 20 A

IQ Microinverters branch circuit design					
Specifications	Units	IQ7-60-2-INT/ IQ7-60-M-INT	IQ7PLUS-72-2-INT/ IQ7PLUS-72-M-INT	IQ7A-72-2-INT/ IQ7A-72-M-INT	IQ7X-96-2-INT
Maximum units per single/multi-phase 20 A circuit	16 A/I_{acmax}	15 (L+N)/45 (3L+N)	12 (L+N)/36 (3L+N)	10 (L+N)/30 (3L+N)	11 (L+N)/33 (3L+N)
		IQ8MC-72-M-INT	IQ8AC-72-M-INT	IQ8HC-72-M-INT/ IQ8X-80-M-INT	IQ8P-72-2-INT
		11 (L+N)/33 (3L+N)	10 (L+N)/30 (3L+N)	9 (L+N)/27 (3L+N)	7 (L+N)/21 (3L+N)
		IQ9N-A-INT			
		8 (L+N)/24 (3L+N)			
		For an IQ Cable with 2.5 mm^2 stranded conductors and using a 1.25 safety factor, 16 A per phase is calculated as the maximum current according to IEC 60364. The safety factor applied may vary based on local regulations or best practices, as well as the characteristics of the OCPD selected.			
Maximum units per single/multi-phase IQ Cable section	—	IQ7-60-2-INT/ IQ7-60-M-INT	IQ7PLUS-72-2-INT/ IQ7PLUS-72-M-INT	IQ7A-72-2-INT/ IQ7A-72-M-INT	IQ7X-96-2-INT
		15 (L+N)/24 (3L+N)	12 (L+N)/21 (3L+N)	10 (L+N)/18 (3L+N)	11 (L+N)/21 (3L+N)

[1] Connector plus associated cable weight

IQ Microinverters branch circuit design					
Specifications	Units	IQ7-60-2-INT/ IQ7-60-M-INT	IQ7PLUS-72-2-INT/ IQ7PLUS-72-M-INT	IQ7A-72-2-INT/ IQ7A-72-M-INT	IQ7X-96-2-INT
		IQ8MC-72-M-INT	IQ8AC-72-M-INT	IQ8HC-72-M-INT/ IQ8X-80-M-INT	IQ8P-72-2-INT
		8 (L+N)/18 (3L+N)	8 (L+N)/18 (3L+N)	8 (L+N)/18 (3L+N)	7 (L+N)/15 (3L+N)
		IQ9N-A-INT			
		8 (L+N)/16 (3L+N)			
		Centre-feeding is the best practice. These design limits should ensure that voltage rise and line conductor resistance on the IQ Cable are maintained within acceptable limits. In locations with a risk of high grid voltage at the point of connection, it may be necessary to decrease the maximum number of microinverters on the IQ Cable section by as much as 50%.			

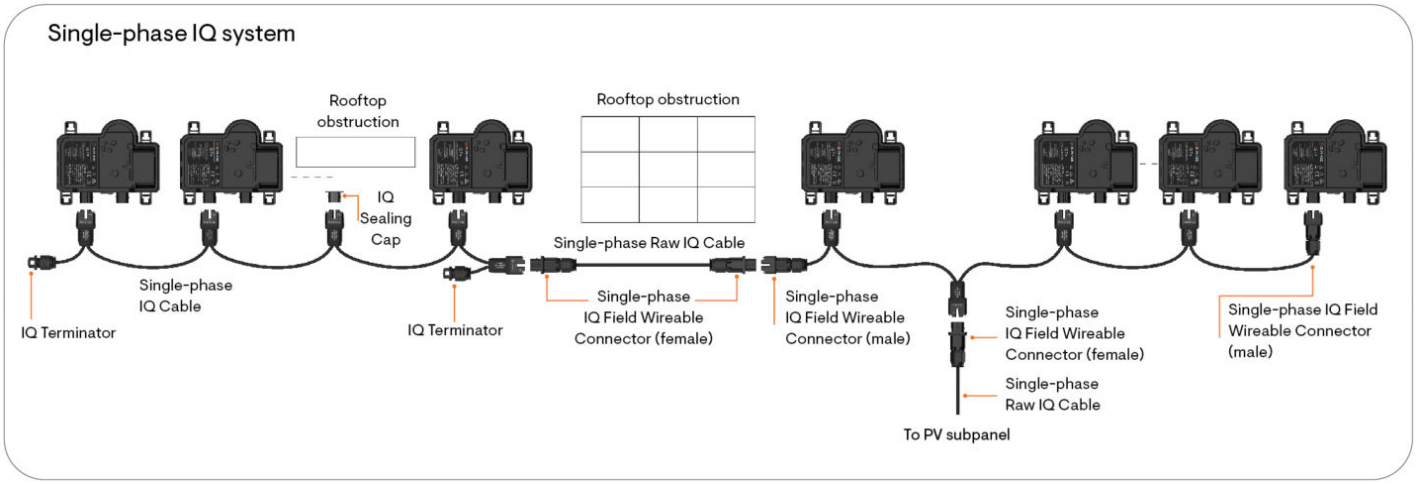

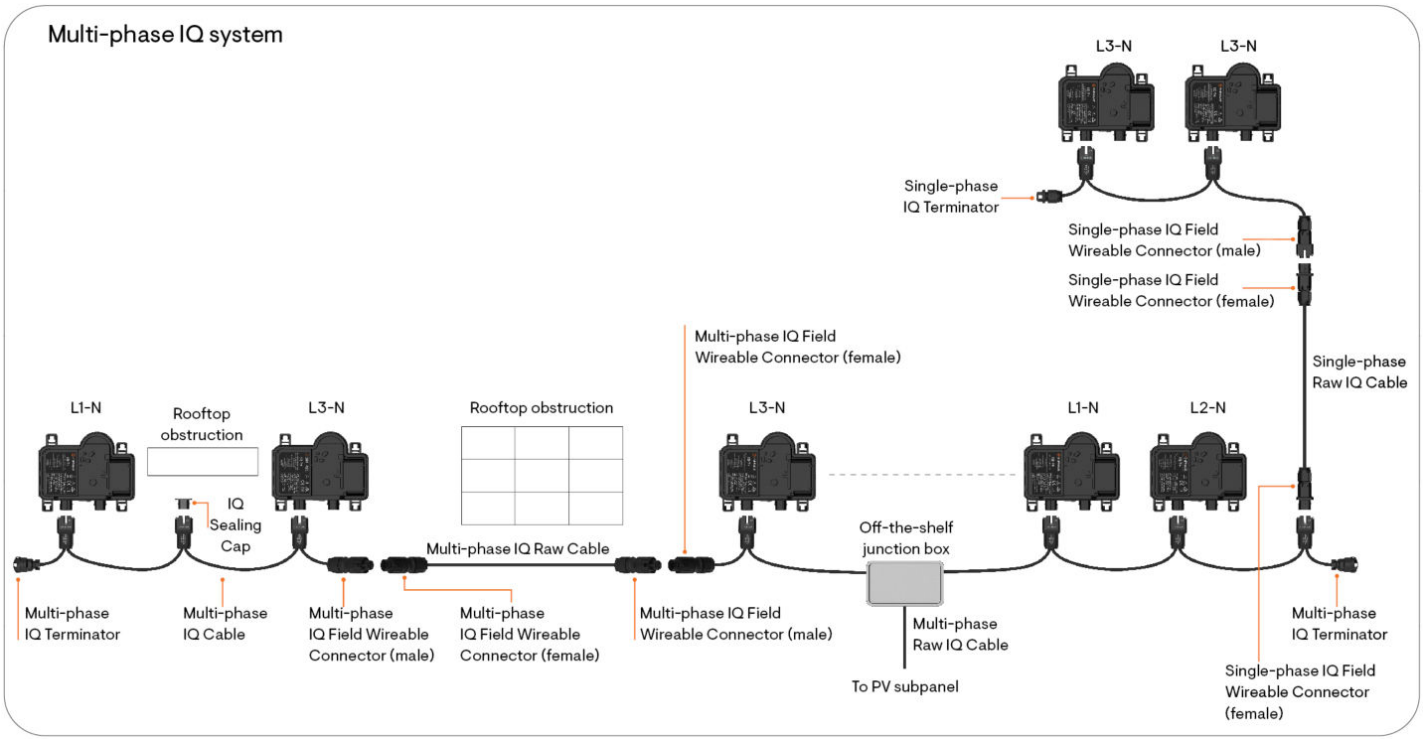

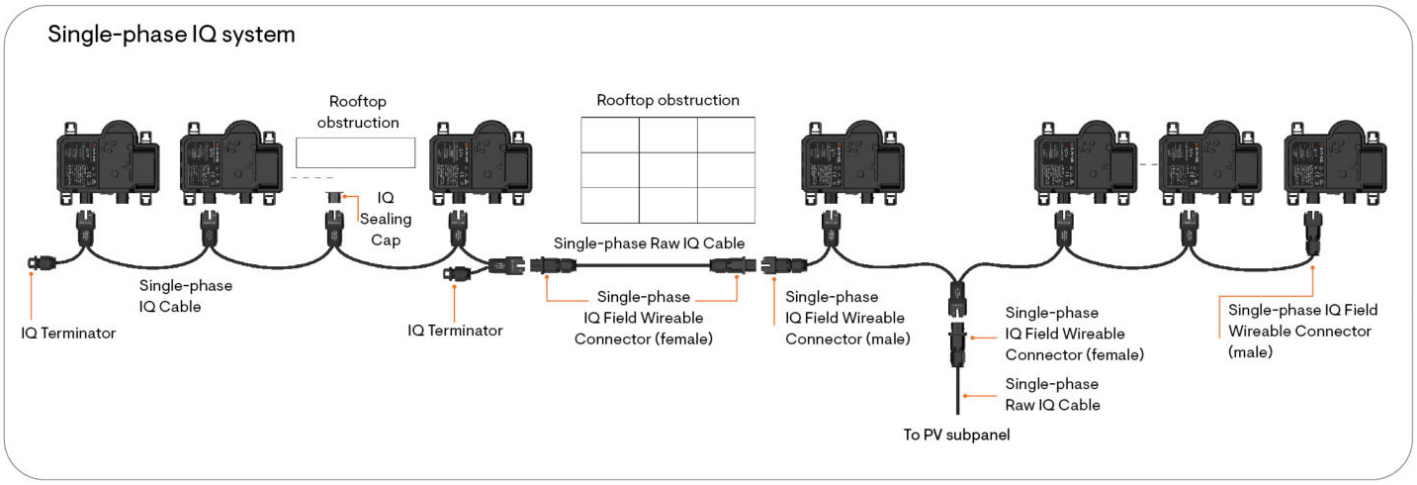

IQ Cable and accessories



Single-phase Raw IQ Cable (Q-25-RAW-300)

A reel of 300 m of UV-resistant, 2 × 2.5 mm^2 IQ Cable with no connectors.

Voltage/Current rating:
600 VAC/25 A

Temperature: -40°C to 90°C

L × W × H:
500 mm × 200 mm × 400 mm

Weight: 49 kg



Multi-phase Raw IQ Cable (Q-25-RAW-3P-300)

A reel of 300 m of UV-resistant, 4 × 2.5 mm^2 IQ Cable with no connectors.

Voltage/Current rating:
600 VAC/25 A

Temperature: -40°C to 90°C

L × W × H:
500 mm × 200 mm × 400 mm

Weight: 75 kg



Single-phase IQ Field Wireable Connector (male) (Q-CONN-R-10M)

Make field connections with a single-phase IQ Cable. Supports conductor cross-sectional area of 2 × 2.5 mm^2 and cable outer diameter 10.3±0.3 mm. Use Crimp tool: Multi-contact PV-CZM-18100/19100/22100 for crimping the terminal to the cable

Voltage/Current rating:
250 VAC/25 A

Temperature: -40°C to 85°C

L × W × H: 98 mm × 39 mm × 28 mm



Single-phase IQ Field Wireable (Q-CONN-R-10F)

Make field connections with a single-phase IQ Cable. Supports conductor cross-sectional area of 2 × 2.5 mm^2 and cable outer diameter 10.3±0.3 mm. Use Crimp tool: Multi-contact PV-CZM-18100/19100/22100 for crimping the terminal to the cable

Voltage/Current rating:
250 VAC/25 A

Temperature: -40°C to 85°C

L × W × H:
93 mm × 39 mm × 28 mm



Multi-phase IQ Field Wireable Connector (male) (Q-CONN-3P-10M)

Make field connections with a multi-phase IQ Cable. Supports conductor cross-sectional area of 5 × 2.5–6 mm^2 and cable outer diameter 8–21 mm. Use a screwdriver blade width of 4–3.2 mm to torque the contact carrier screw.

Voltage/Current rating:
690 VAC/25 A

Temperature: -40°C to 105°C

L × W × H: 109 mm × 38 mm × 38 mm



Multi-phase IQ Field Wireable Connector (female) (Q-CONN-3P-10F)

Make field connections with a multi-phase IQ Cable. Supports conductor cross-sectional area of 5 × 2.5–6 mm^2 and cable outer diameter 8–21 mm. Use a screwdriver blade width of 4–3.2 mm to torque the contact carrier screw.

Voltage/Current rating:
690 VAC/25 A

Temperature: -40°C to 105°C

L × W × H:
107 mm × 38 mm × 38 mm



Single-phase IQ Terminator (Q-TERM-R-10)

For unused single-phase IQ Cable ends. Supports conductor cross-sectional area of 2 × 2.5 mm^2 and cable outer diameter 10.3±0.3 mm

Temperature: -40°C to 85°C

L × W × H: 53 mm × 30 mm × 28 mm



Multi-phase IQ Terminator (Q-TERM-3P-10)

For unused multi-phase IQ Cable ends. Supports conductor cross-sectional area of 4 × 2.5 mm^2 and cable outer diameter 12.3±0.4 mm

Temperature: -40°C to 85°C

L × W × H:
46.4 mm × 36 mm × 36 mm

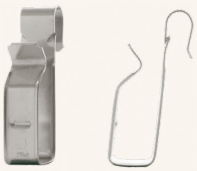

IQ Cable Clip (ET-CLIP-100)

Used to fasten cabling to the racking or to secure looped cabling. A clip can be used to hold up to two single-phase IQ Cables

H × W: 42 mm × 10 mm



IQ Disconnect Tool (Q-DISC-10)

Used to disconnect IQ Cable connectors, DC connectors, and AC module mount.

L × W × H:
83 mm × 55 mm × 6 mm



IQ Sealing Caps (female) (Q-SEAL-10)

Used to cover any unused connector on the IQ Cabling.

Temperature: -40°C to 85°C

L × W × H: 24 mm × 38 mm × 19 mm



Replacement DC adaptor (MC4) (Q-DCC-2-INT and Q-DCC-2-P-INT)

DC adaptor to Stäubli branded MC4 for IQ7 Series Microinverters.

Voltage/ Current rating: 100 VDC/20 A

Temperature: -40°C to 85°C

L × W × H: 160 mm × 40 mm × 21 mm

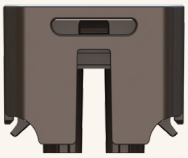

IQ Sealing Caps (male) (Q-BA-CAP-10)

Use the sealing cap to cover any exposed IQ Microinverter 2-pin AC connectors that are not connected to the IQ Cable, to protect against moisture or water damage when kept open overnight.

Temperature: -40°C to 85°C

L × W × H: 39 mm × 21 mm × 30 mm

Revision history

Revision	Date	Description
DSH-00368-3.0	May 2026	Editorial updates.

DSH-00368-2.0	April 2026	• Updated the document to a new format.
		• Updated the following sections.
		  • IQ Cabling types/ordering options
		  • IQ Microinverters branch circuit design
		  • IQ Cable and accessories

DSH-00368-1.0	June 2023	Initial release.