ESDEC

INNOVATIVE **MOUNTING SYSTEMS**

MANUAL

CLICKFIT EVO
ROOF HOOK PRO

CLICKFIT EVO

www.esdec.com

TABLE OF CONTENTS

Introduction **3**
About this document 3
Other relevant documents 3
Earthing and bonding 3
Symbols used in this manual 3

Warranty and liability **3**
Warranty 3
Liability 3

Product information **4**
Intended use 4
Improper use 4
Compatible solar panel flange dimensions 4
Specifications 5

System and application **6**
Components **6**

Safety **7**
Personal protective equipment **7**
Safety warnings and regulations **7**

Mounting the Roof Hooks PRO **8**
Preparation **8**
Tightening torques 8
Preparing and sizing mounting rails **11**
Install the Roof Hook PRO **12**
Attaching the mounting rails **16**
Optional: Attaching the MLPE clips **17**
ClickFit EVO MLPE Clip Light Weight 17
ClickFit EVO MLPE Clip Heavy Weight 18

Mounting solar panels with 60mm panel clamps **18**
Mounting the first panel **18**
Mounting the following panels **21**
Mounting the last panel **22**

Mounting the solar panels with 35 mm panel clamps **23**
Mounting the first panel **23**
Mounting the following panels **26**
Mounting the last panel **27**
Mounting multiple rows **29**

Removal and recycling **29**
General 29

INTRODUCTION

ABOUT THIS DOCUMENT

In this manual you will find the installation instructions for the ClickFit EVO mounting system for solar panels on tiled roofs.

The system is suitable for mounting solar panels in portrait and landscape orientation.

These instructions are addressed at qualified technical personnel.

You can download the latest version of this manual from www.esdec.com.

OTHER RELEVANT DOCUMENTS

When installing the ClickFit EVO mounting system, you will need the following documents:

- The project plan, which you can create in the calculator at https://www.esdec.com/en/calculator.
- The installation manuals for the solar panels, inverters and any other components.

During the installation of the mounting system, it is important to adhere to the installation manual, the installation manual of the components, and the accompanying standards to prevent accidents. Pay special attention to (local) standards, regulations and legislation (among others):

EARTHING AND BONDING

Our ClickFit EVO systems are VDE certified for corrosion and bonding. According to the electrical standard HD-IEC 60364 – chapter 712, functional bonding for inverter's isolation check is necessary.

In the Esdec ClickFit EVO Series functional bonding is achieved through the EVO universal module clamp for the module frames and EVO rails. The final functional bonding connection is made by proper mounting of a separate bonding cable onto the EVO rail and an adequate bonding connection with the inverter or earthing contact.

For detailed instructions on grounding and bonding, consult the electrical standard HD-IEC 60364 and any local regulations. Please, follow the instructions of the inverter's manual. This operation needs to be done by a certified electrician.

SYMBOLS USED IN THIS MANUAL

	Warning!	Failure to follow this instruction could result in serious injury or major damage to the product.
	Caution!	Failure to follow this instruction could result in personal injury or damage to the product.
	Note	Emphasises an instruction.

WARRANTY AND LIABILITY

WARRANTY

Esdec extends a 20 year product warranty. The warranty is subject to the warranty terms and general terms & conditions of Esdec. These can be found on the www.esdec.com website.

LIABILITY

The manufacturer accepts no liability for damage or injury caused by the failure to comply (strictly) with the safety guidelines and instructions in this manual, or by negligence during installation of the product and the accessories listed in this document.

Esdec reserves the right to change this document without notice.

PRODUCT INFORMATION

INTENDED USE

The ClickFit EVO mounting system is designed for mounting solar panels on tiled roofs. With this mounting system, solar panels can be positioned on the roof either with the short side at the bottom (portrait) or with the long side at the bottom (landscape).

IMPROPER USE

The mounting system is not suitable for use on types of roof other than the one specified.

COMPATIBLE SOLAR PANEL FLANGE DIMENSIONS

The universal module clamp is suitable for solar panels with a frame height between 29-50mm and a frame width of at least 12mm, where a sufficient clamping force can be applied.

Check the documentation of the solar panel supplier if the intended solar panel can withstand the loads and clamping force.

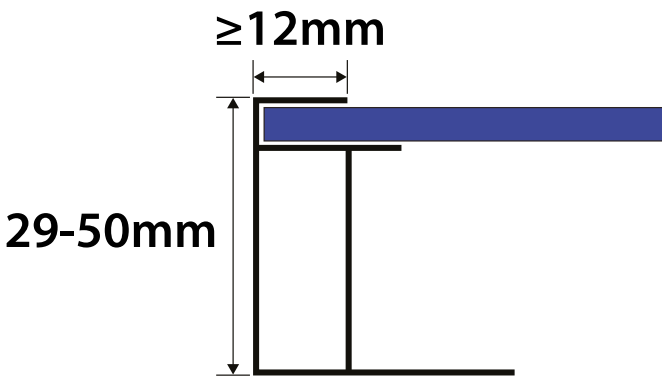

SPECIFICATIONS

Orientation of solar panels	Portrait and landscape
Frame height of solar panel [1)]	29 - 50mm
Maximum area of solar panels	2.6m²
Maximum field size [2)]	Horizontal rails: 15m per segment Longer segments require a dilatation gap of 125mm.
Rail protrusion range	90-350mm
Dilatation gap	125mm
Roof material	Roof tiles
Roof structure	Rafters
	Solid wood boards [3)]
Roof pitch	5-75° ! At an inclination angle of <10°, the self-cleaning effect of the panel is affected.
Maximum roof height	ℹ Subject to Eurocode guidelines and national additions. Use the calculator to calculate the possibilities of your project.
Edge zone	30cm distance to the ridge, 30cm to the side of the roof and 30 cm to the gutter.

[1)] Ensure that the module frame is compatible with the ClickFit EVO clamps before installation.

[2)] Always consider the right measures related to fire spread and compartmentalization. This might influence the modules segment size.

[3)] Ensure the load bearing capacity of the solid wood boards before placing the hooks.

! Enter the data in the calculator, so you are sure of choosing the right system for the terrain category, snow loads and wind zone that applies to your project.

ℹ Depending on the roof and the result obtained from the calculator, you can lay several segments with solar panels next to each other. Always leave a minimum of 12mm of space between segments to allow for expansion of the roof.

ℹ If your project has different specifications than these, please contact Esdec.

ℹ When snow fences are installed, it is mandatory to contact the Esdec Project Engineering department to validate the calculations due to extreme snow loads via project-engineering@esdec.com

1 COMPONENTS

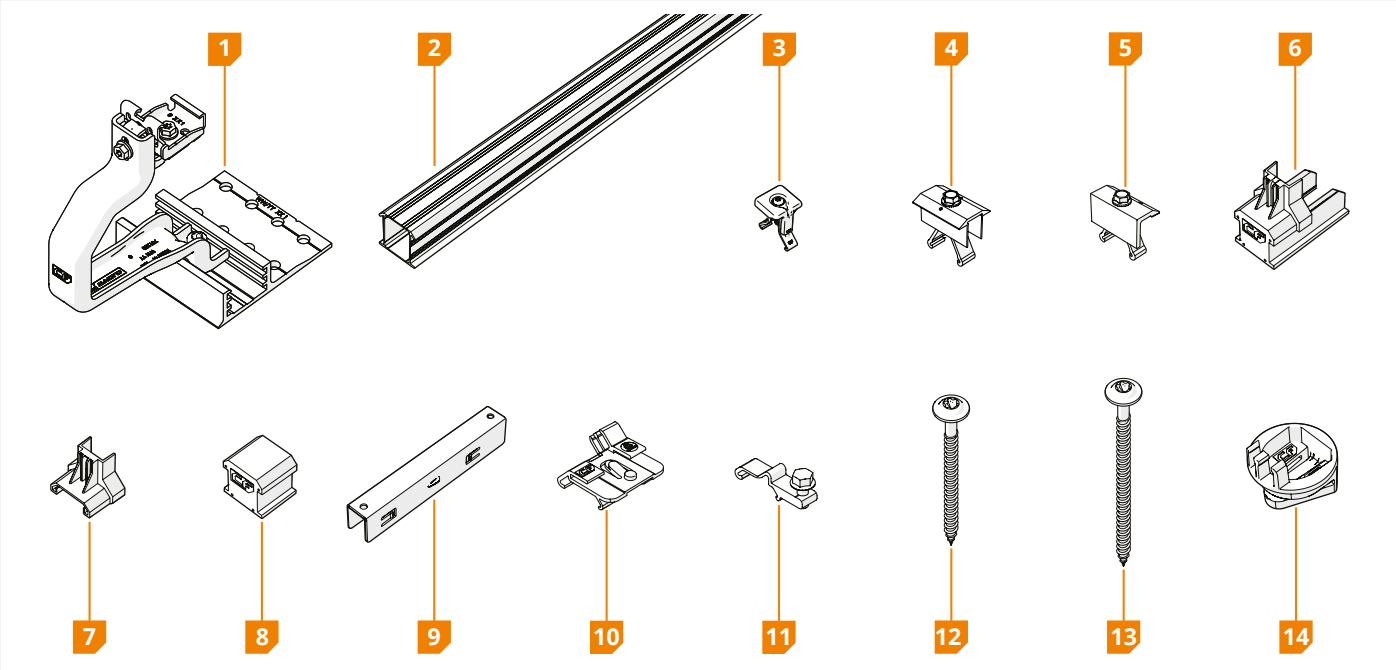

COMPONENT	ARTICLE NUMBER
1 ClickFit EVO Roof hook PRO	1008041
2 ClickFit EVO Mounting Rail	10081_ _
3 ClickFit EVO Module Clamp	1008020(-B)
4 ClickFit EVO 60 Mid Clamp Black	1008021-B
5 ClickFit EVO 60 End Clamp Black	1008022-B
6 ClickFit EVO 35 Mounting Rail End Cap	1008060(-B)
7 ClickFit EVO 35 End Clamp Support	1008065(-B)
8 ClickFit EVO End Cap without end clamp support	1008066(-B)
9 ClickFit EVO Mounting Rail Coupler	1008061
10 ClickFit EVO MLPE Clip Light Weight	1008067
11 ClickFit EVO MLPE Clip Heavy Weight	1008068
12 ClickFit EVO Wood Screw 8x100mm T40	1008083
13 ClickFit EVO Wood Screw 8x120mm T40	1008084
14 ClickFit EVO mounting set	1008064

Check that the correct components are present in the required numbers according to the project plan generated by the calculator.

Ensure the threaded part of the Hangerbolt is inserted at least 50mm into the substructure without protruding through.

SAFETY

1 PERSONAL PROTECTIVE EQUIPMENT

	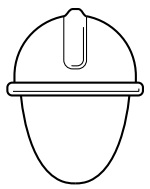				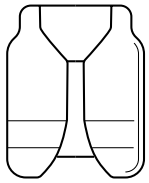	
Hearing protection	Safety helmet	Safety glasses	Face masks	Safety gloves	Safety clothing	Safety shoes

2 SAFETY WARNINGS AND REGULATIONS

Warning!

- Installation work should always be carried out by at least two skilled people.
- Do not use components from other mounting systems.
- Do not leave out parts.
- Always work according to the current regulations for working on roofs.
- Do not perform the installation in strong winds, or when the roof is slippery or wet.
- Always work on the roof with fall protection and, if necessary, with safety nets and edge protection.
- Never stand on or in the gutter.
- Always use a lifting aid or hoisting device when moving heavy equipment.
- Always place ladders on a strong, stable surface.

Caution!

- Walk as little as possible on the roof. Use an aerial platform, ladder or other solution.
- Never walk on the system or on the solar panels.

MOUNTING THE ROOF HOOKS PRO

1 PREPARATION

1 INSPECT THE ROOF.

☐	The roof is in good condition.
☐	The roof construction has sufficient bearing capacity to support the installation, taking into account wind and snow loads.

2 CHECK THE PROJECT PLAN AND COMPONENTS.

☐	Check the project plan. Is there no project plan? Then create one in the online calculator before starting installation.
☐	Check that all components are present (page 5).
☐	Determine the position of the Roof Hooks PRO. Only install on rafters, not on battens.

3 MAKE SURE ALL THE REQUIRED TOOLS ARE AT HAND.

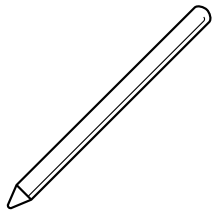	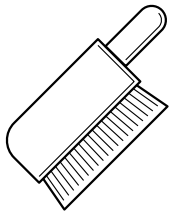	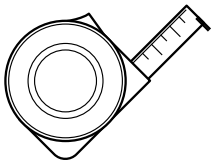	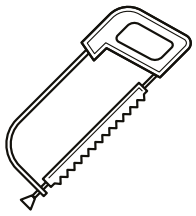	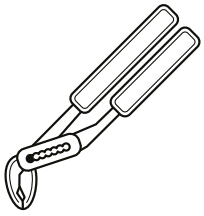
Marker or chalk	Brush	Tape measure	Hacksaw	Water pump pliers
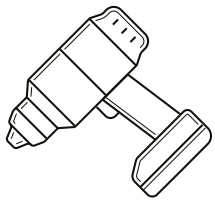	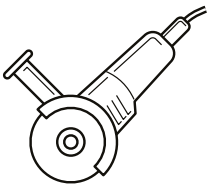			
Cordless screwdriver	Angle grinder (optional)			

TIGHTENING TORQUES

[!] Always use a torque wrench. Make sure that the bit is correctly and completely inserted in the screw head when tightening, in view of the high tightening torque.

Screw	Tightening torque
ClickFit EVO Module Clamp	4.5 Nm
Mounting screw for vertical rail	1 Nm
ClickFit EVO MLPE Clip Heavy Weight	8-12 Nm
ClickFit EVO 60 End Clamp Black	16.5 Nm
ClickFit EVO 60 Mid Clamp Black	16.5 Nm

4 CLEAN AND TIDY THE ROOF.

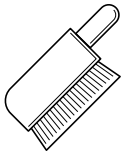

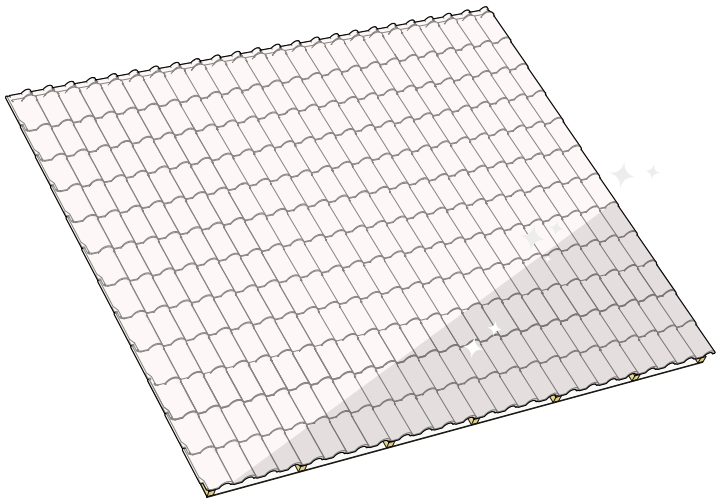

5 DETERMINE THE POSITION OF THE SOLAR PANELS ON THE ROOF

- Consider the (local) fire regulations for photovoltaic installations. To mitigate the risk of fire spread, the fire compartments of the object must be respected. The PV system should not be placed over fire partition walls and a minimum distance of 30 cm must be kept. Likewise, it is wise to keep space in relation to skylights, lighting globes, corners and potential fire hazards.
- Develop a project plan using the ESDEC calculator and adhere to its guidelines. Access the calculator at calculator.eu.esdec.com.
- The distance from the edge of solar panels to both the ridge and the gutter must be at least 30cm.
- The distance from the solar panels to the side of the roof must be at least 30cm.
- Take into account sunlight and shade over the whole year. If necessary, use a power optimizer or micro inverter to get the most out of your installation.

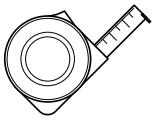

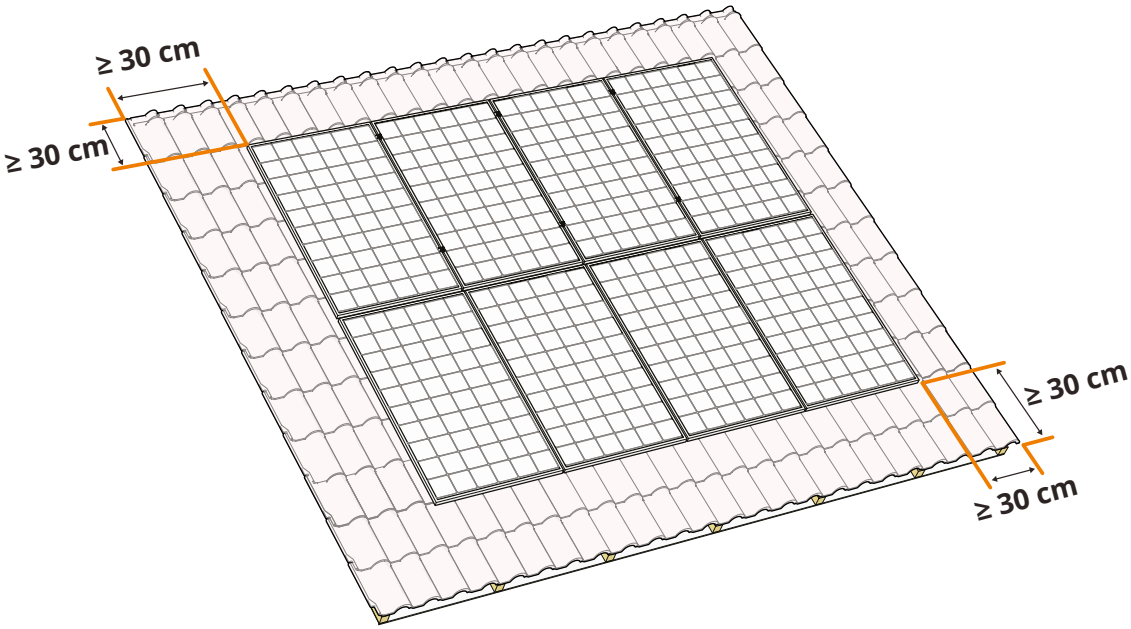

6 DRAW THE LINES AND END POINTS FOR THE MOUNTING RAILS

Rail lengths can be found in the project plan.

For mounting in landscape orientation, the mounting rails should be placed at around ¼ of the short sides of the panel.

For mounting in portrait orientation, the mounting rails should be placed at around ¼ of the long sides of the panel.

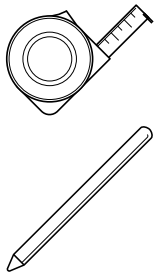

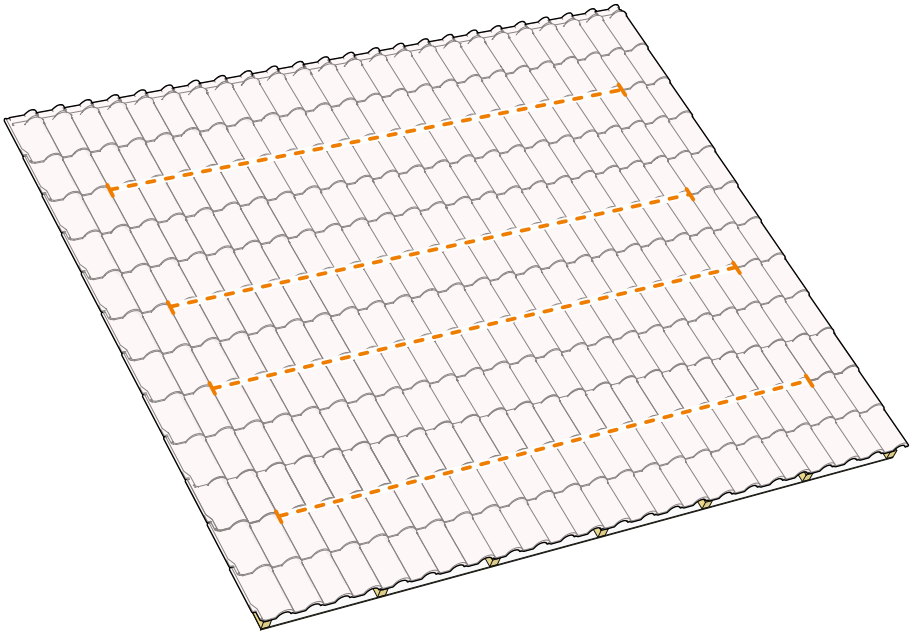

7 MARK THE POSITION OF THE ROOF HOOKS PRO

Consult the project plan to determine the position of the Roof Hooks PRO for your project.

Only install on rafters, not on battens.

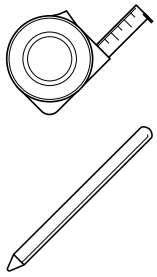

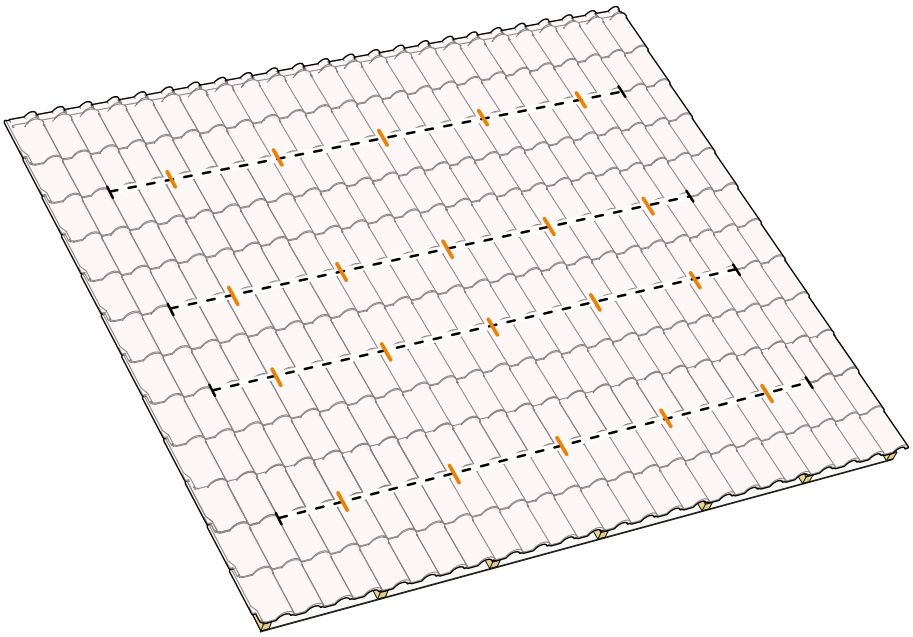

2 PREPARING AND SIZING MOUNTING RAILS

1 CONSULT THE PROJECT PLAN FOR THE OVERALL LAYOUT OF THE SOLAR PANEL SEGMENTS.
2 CALCULATE THE FULL LENGTH OF THE SOLAR PANEL LAYOUT, ACCOUNTING FOR GAPS AND/OR SPACING.
3 CALCULATE THE NECESSARY MOUNTING RAIL EXTENSIONS AND ADJUSTMENTS.

Measure the solar panels and add 12mm between each solar panel for the universal module clamp (20mm for the ClickFit EVO 60mm clamp). Add 20-35mm on each side for mounting the end clamp and end cap (50-70mm for the ClickFit EVO 60mm clamp).

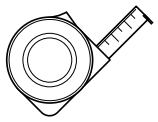

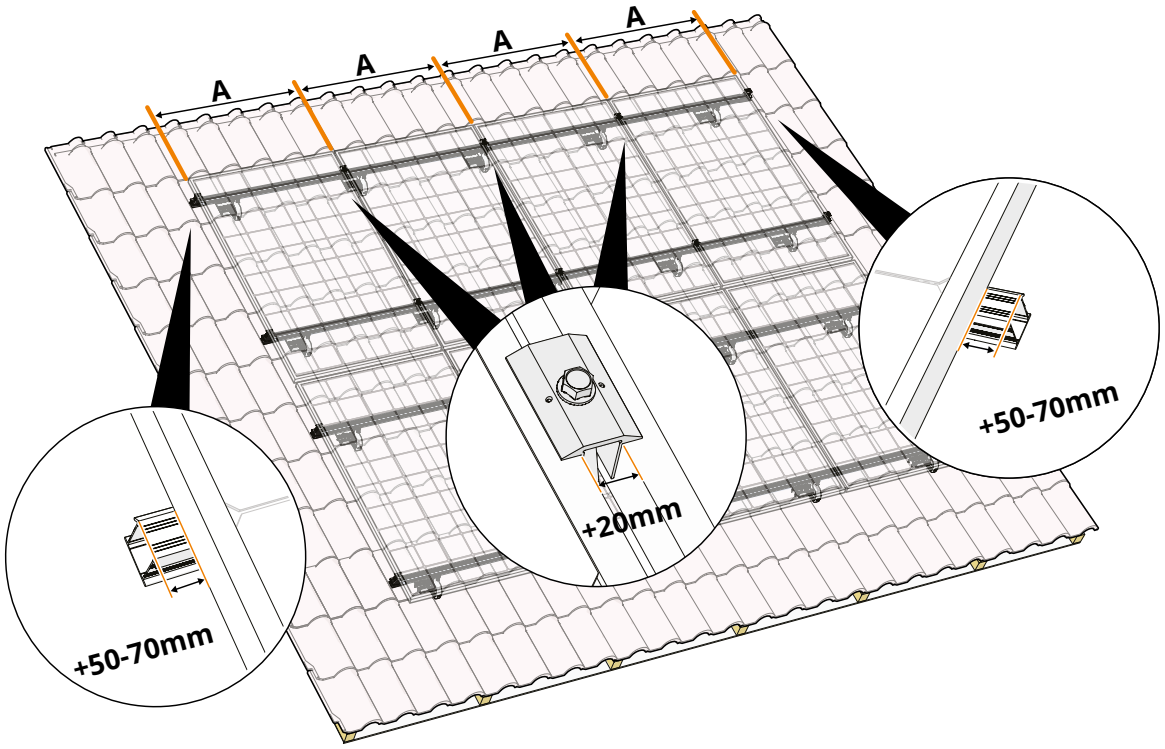

4 USE COUPLERS TO CONNECT THE MOUNTING RAILS, IF NECESSARY

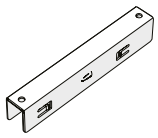

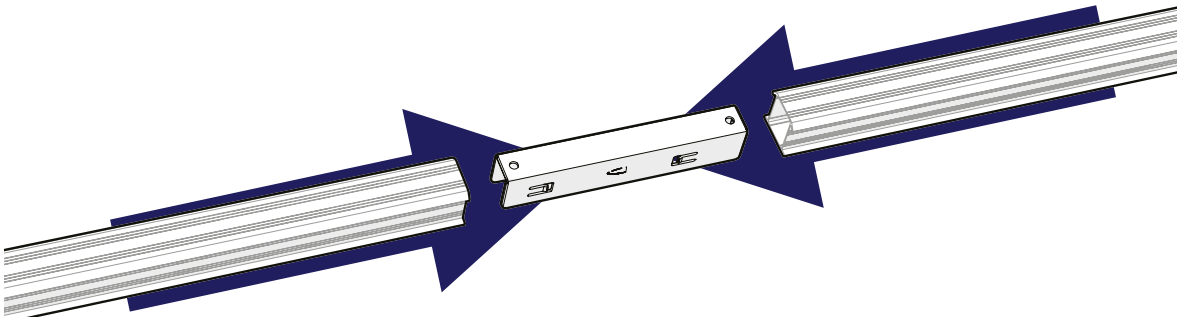

5 IF THE OVERHANG IS GREATER THAN 250MM: EXTEND THE MOUNTING RAIL TO THE NEXT RAFTER.
6 CUT THE MOUNTING RAILS TO SIZE.

a. If the calculated overhang of the solar panel is **more** than 350mm beyond the marked position of the last Roof Hook PRO, mark the position of an extra Roof Hook PRO on the nearest rafter. Extend the mounting rail to 50mm beyond the extra Roof Hook PRO.

The additional 50 mm extension allows for proper fitting of an end cap (art. no. 1008066(-B)) to the mounting rails.

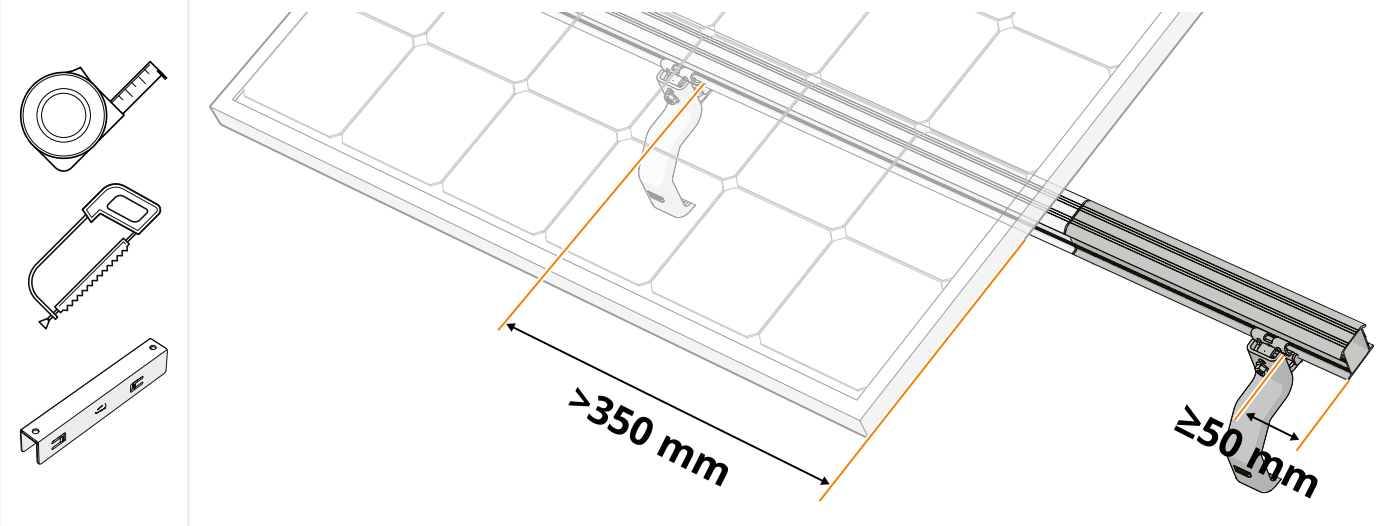

b. If the calculated overhang is less than 250mm beyond the marked position of the last Roof Hook PRO, keep 20-35mm rail length overhang for mounting the end cap (art. no. 1008066(-B)) (>40mm for the ClickFit EVO 60mm clamp).

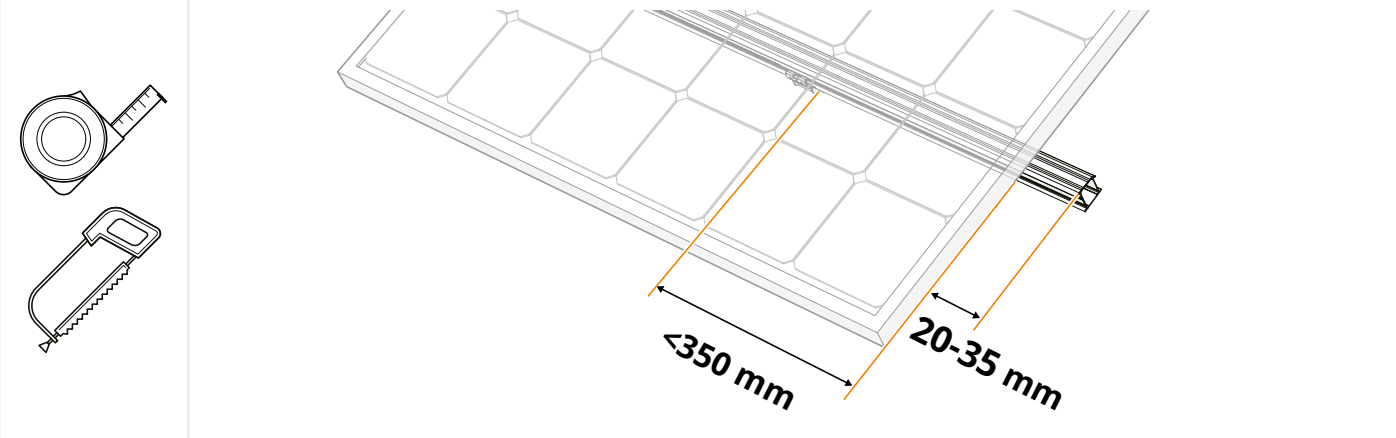

3 INSTALL THE ROOF HOOK PRO

1 SLIDE THE TILE UNDER WHICH THE BASE PLATE OF THE ROOF HOOK PRO WILL BE MOUNTED UPWARDS.

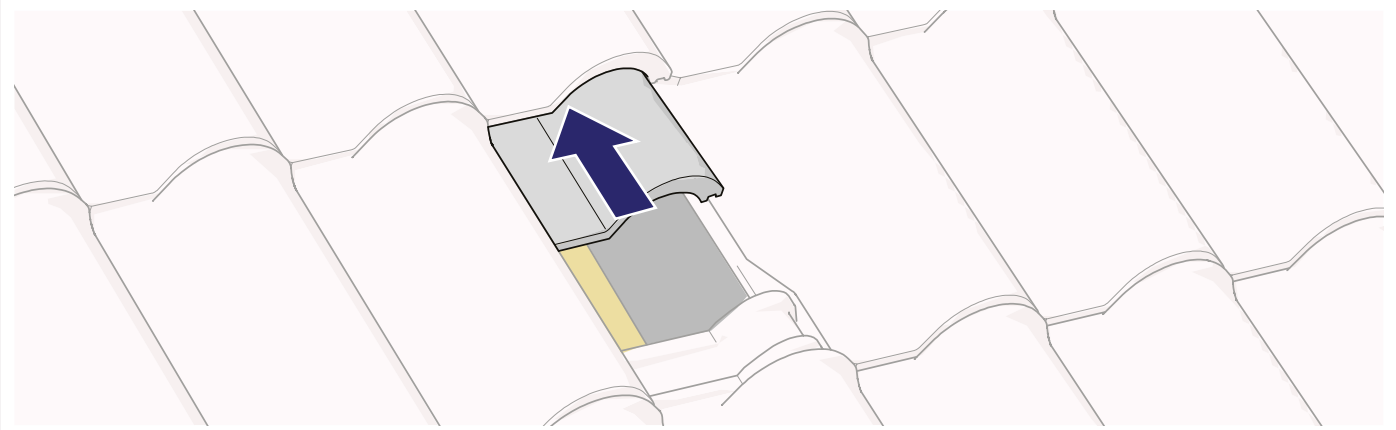

2 MEASURE THE TILE OVERLAP BY SUBTRACTING THE BATTEN DISTANCE (B) FROM THE TILE LENGTH (A). CHECK IF THE ROOF HOOK PRO IS COMPATIBLE WITH YOUR ROOF CONSTRUCTION.

The Roof Hook PRO is compatible with a tile overlap of maximum 90 mm.

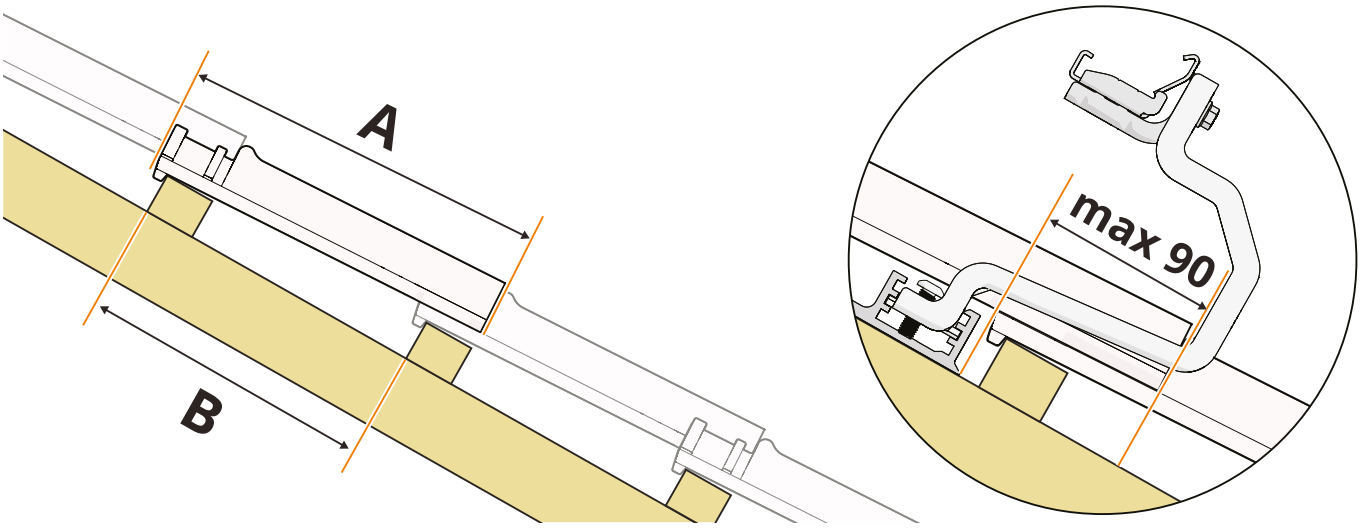

3 PLACE THE ROOF HOOK PRO AS CLOSE AS POSSIBLE TO THE LOWEST PART OF THE ROOF TILE ON THE RAFTER.

Never place a Roof Hook PRO on a non-supporting element of the roof, such as roof boarding, decking, underlayment, or other insulation layers.

The rafter can be hidden under a counter-batten. In this case, ensure proper base plate placement. For roof-specific adjustments, always consult with a roofing specialist and follow local guidelines.

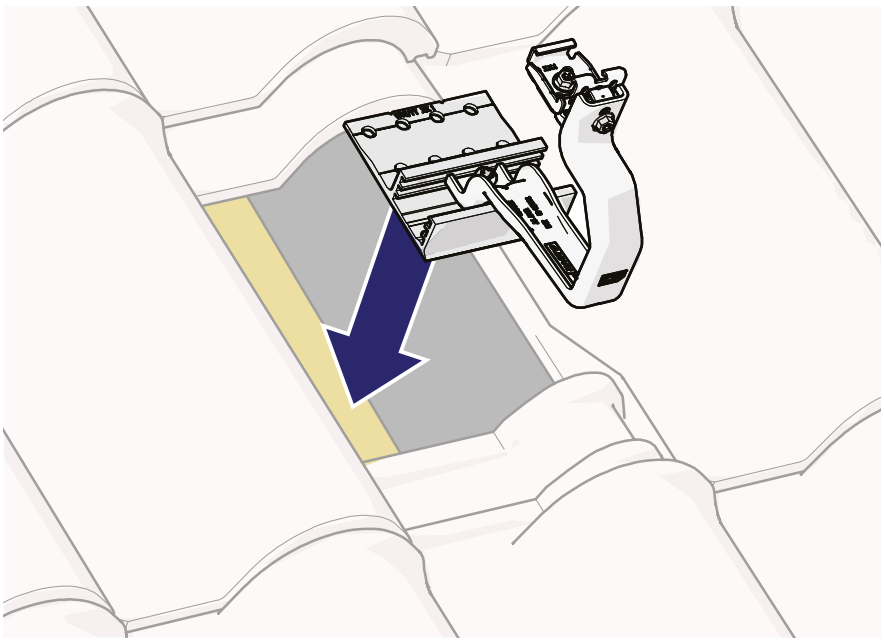

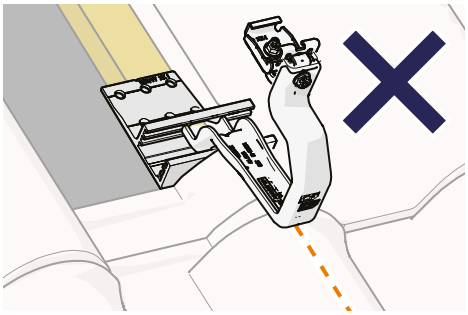

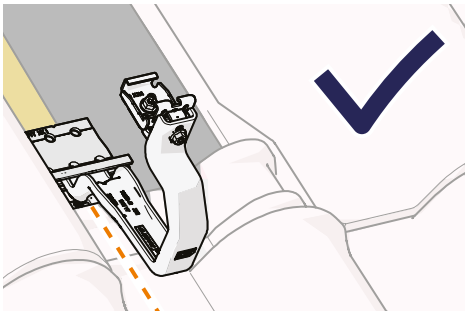

Ensure that the base of the Roof Hook PRO is mounted with the screw holes upwards.

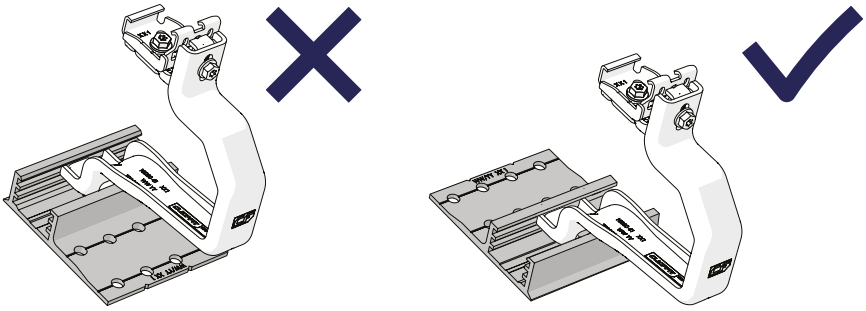

4 ADJUST THE HEIGHT OF THE ROOF HOOK PRO TO CREATE A MINIMUM CLEARANCE OF 5MM FROM THE UNDERLYING ROOF TILE.

After setting the correct height “H“ for the first Roof Hook PRO, align all subsequent Roof Hooks PRO to the same height.

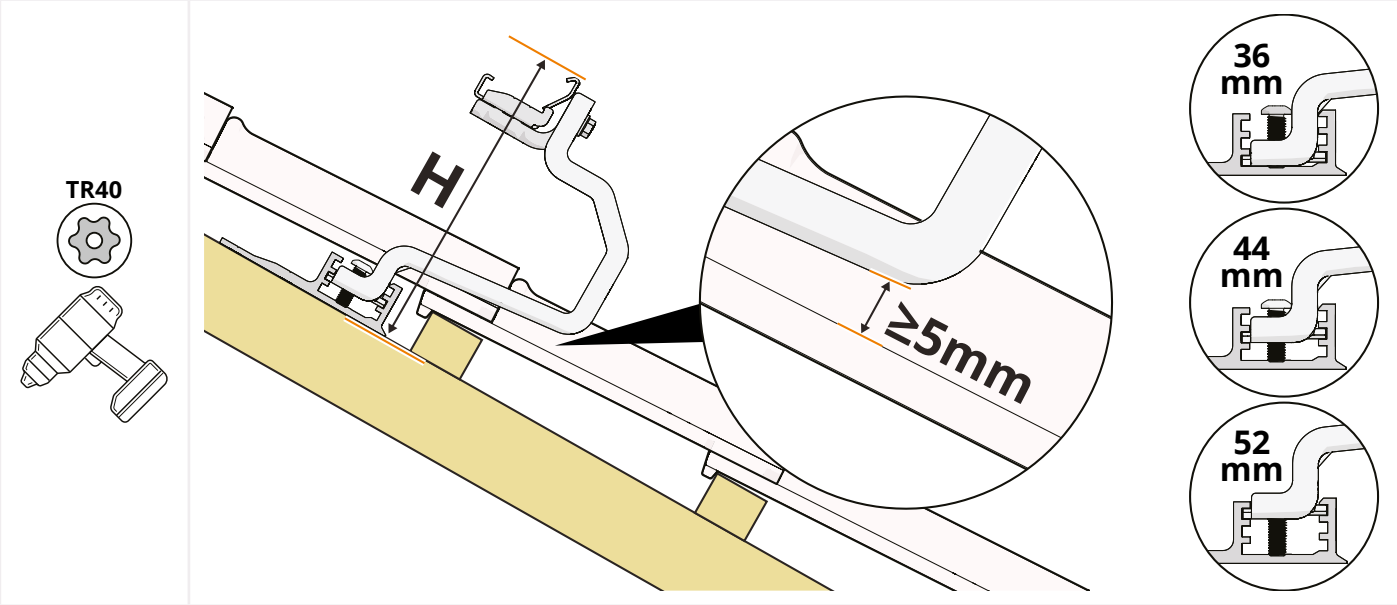

5 OPTIONAL: GRIND OFF THE EDGES OF THE UNDERLYING TILE TO CREATE CLEARANCE FOR THE ROOF HOOK PRO, USING AN ANGLE GRINDER OR FILE.

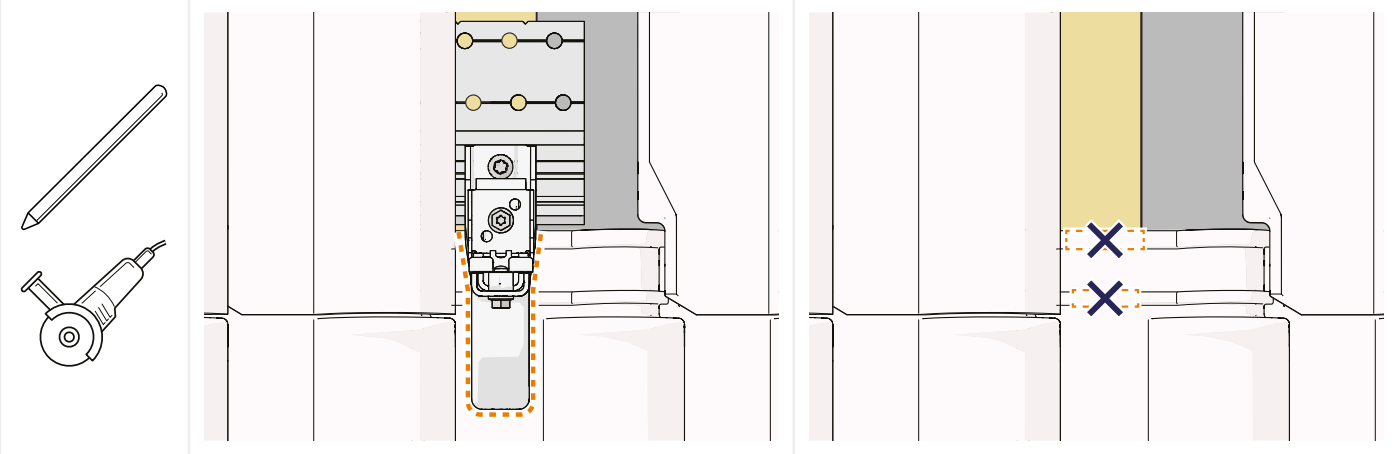

6 ALIGN THE BASE PLATE WITH THE SCREW HOLES AS CLOSE TO THE CENTRE OF THE RAFTER AS POSSIBLE. SECURE THE BASE PLATE SCREW WITH A TORQUE OF 4.5 NM.

The maximum allowed overhang is marked on the base plate.

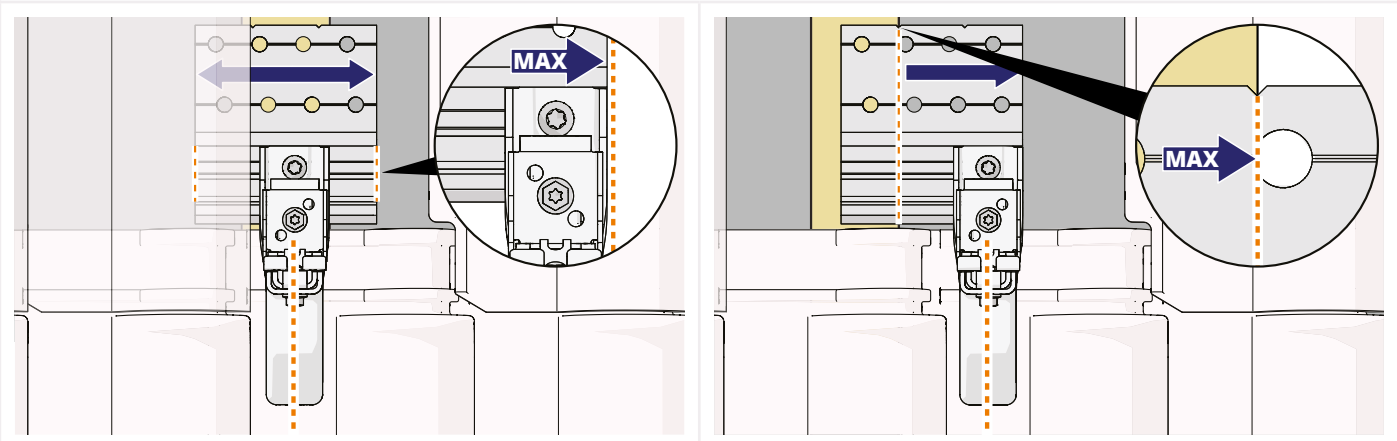

7 POSITION THE ROOF HOOK PRO SO IT DOES NOT INTERFERE WITH THE OVERLAPPING ROOF TILES.
8 MOUNT THE ROOF HOOK PRO TO THE RAFTER USING AT LEAST TWO Ø8MM FLANGE HEAD SCREWS THROUGH VERTICALLY ALIGNED HOLES IN THE BASE, AS CLOSE TO THE CENTRE OF THE RAFTER AS POSSIBLE.

- The base plate has four vertically aligned pairs of screw holes. Always use one top and one bottom hole from the same pair when securing.
- Make sure to insert the screws as close to the centre of the rafter as possible. Keep a minimum distance of two times the screw diameter from the edge of the rafter.
- Make sure to insert the screws at least 40mm into the rafter.
- Please follow your local regulation for the minimum number of screws.

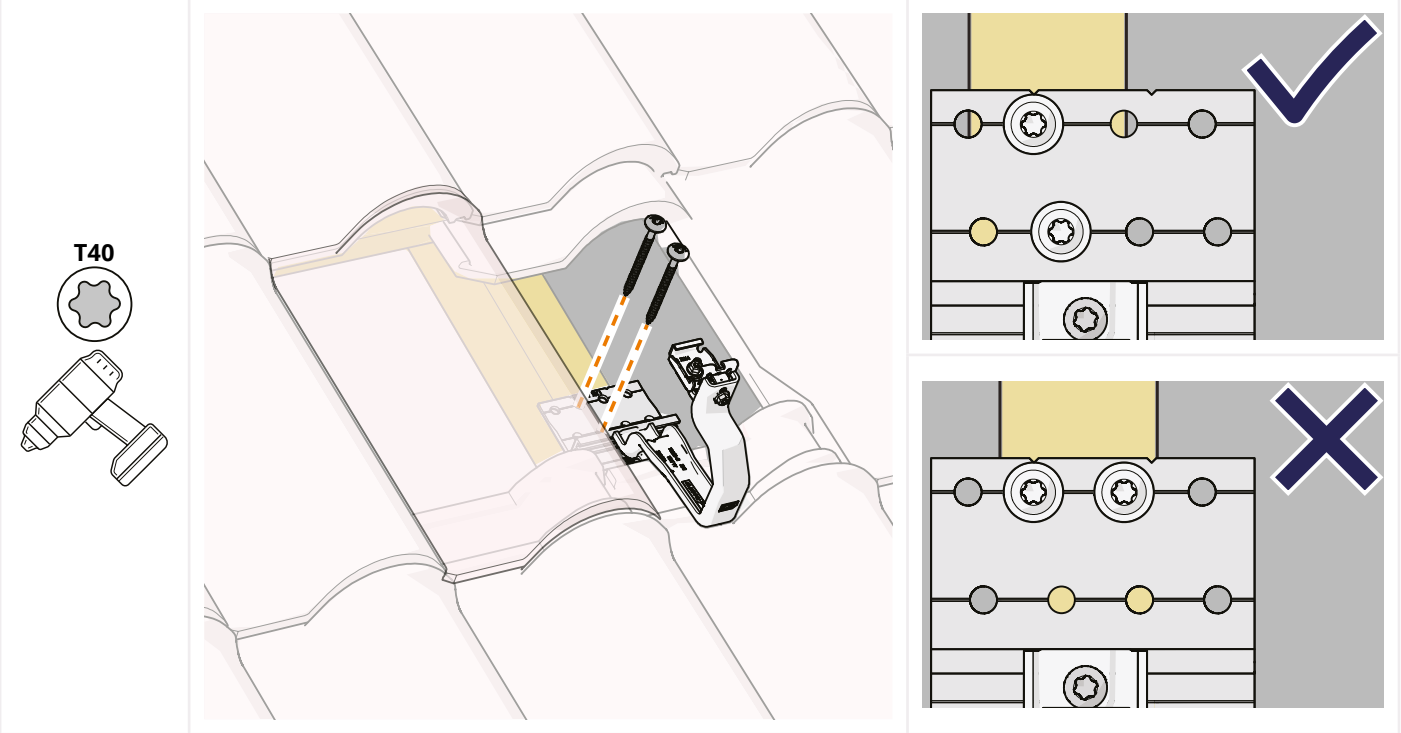

The selection of screws should be based on the specific underroof construction. To ensure proper installation and compatibility with the Roof Hook PRO, we recommend using screws with the following specifications:

Diameter	Ø 8mm
Screw-in depth	≥ 40mm
Head type	Flange head Torx T40
Material	ZnNi coated or stainless-steel grade A2 Do not use galvanised screws

9 OPTIONAL: CUT TWO SLITS IN THE BOTTOM OF THE OVERLAPPING ROOF TILE, USING AN ANGLE GRINDER, TO IMPROVE THE CLOSING OF THE TILE.

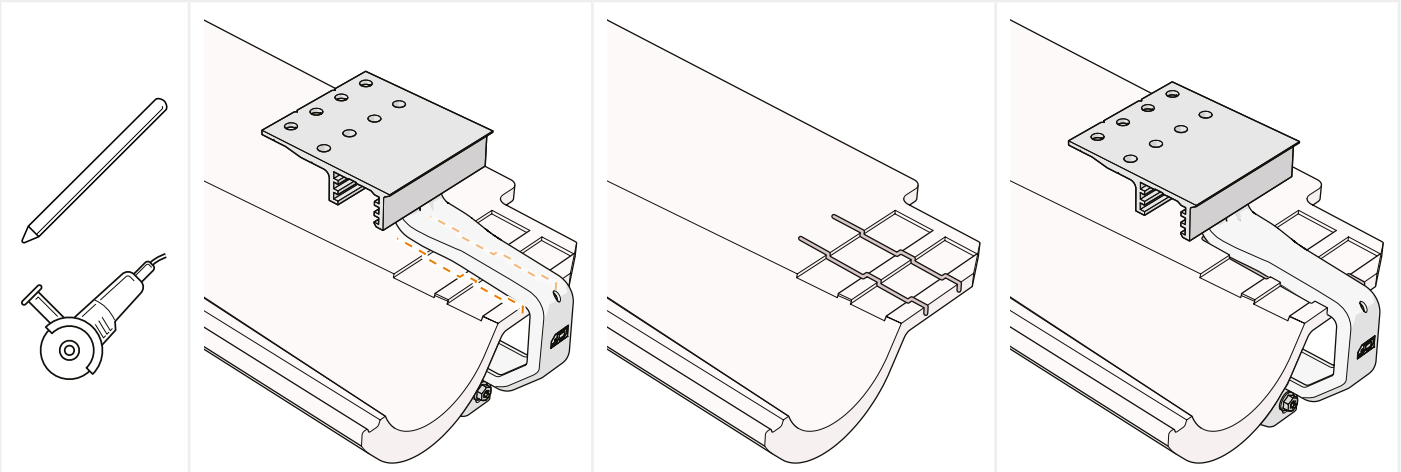

10 REPLACE THE OVERLAPPING ROOF TILE.

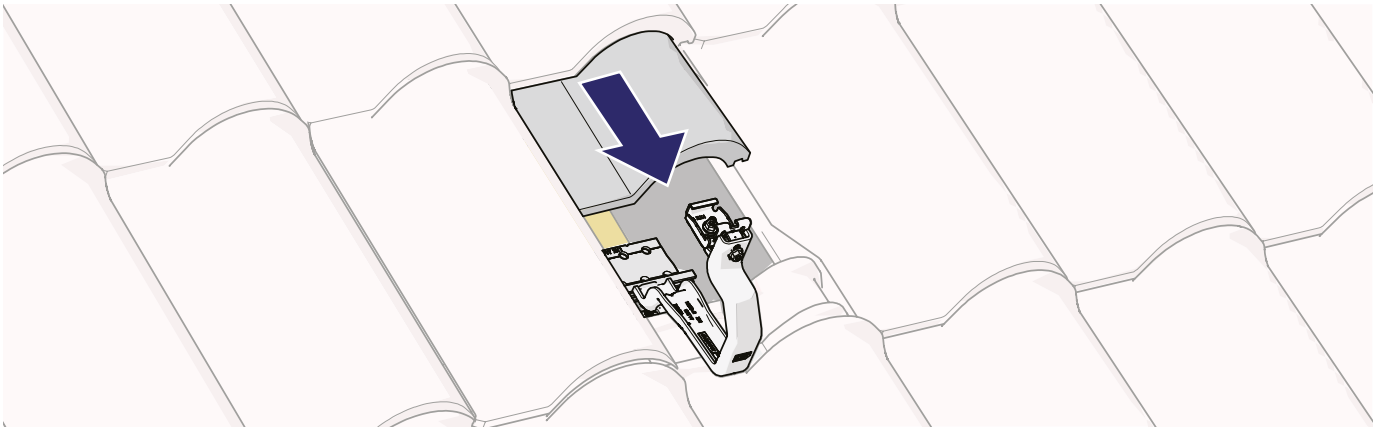

Repeat the steps in this chapter for all Roof Hooks PRO.

4 ATTACHING THE MOUNTING RAILS

1 PLACE THE MOUNTING RAIL IN THE CLICK CONNECTION AND TWIST UNTIL IT CLICKS INTO PLACE.

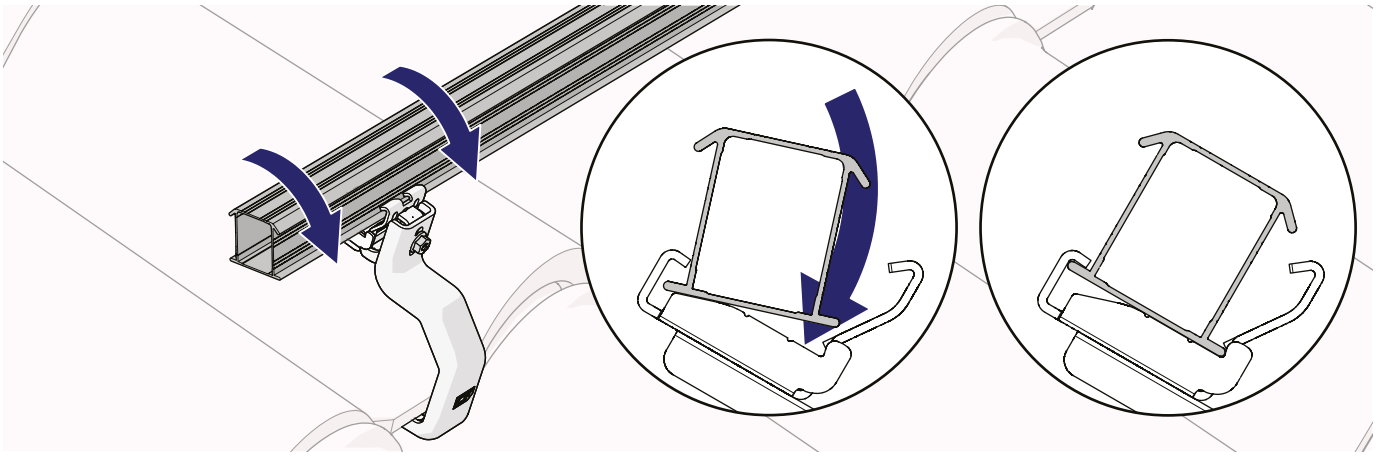

2 FOR UNEVEN ROOFS: LOOSEN THE SCREWS OF ANY MISALIGNED BRACKETS. THE RIGIDITY OF THE RAIL AUTOMATICALLY ALIGNS THE BRACKETS INTO THE CORRECT POSITION.
3 RETIGHTEN THE LOOSENED SCREWS WHEN THE RAIL IS PROPERLY ALIGNED. APPLY A TORQUE OF 9 NM.

The mounting rails need to be straight and parallel for proper installation and alignment of the solar panels.

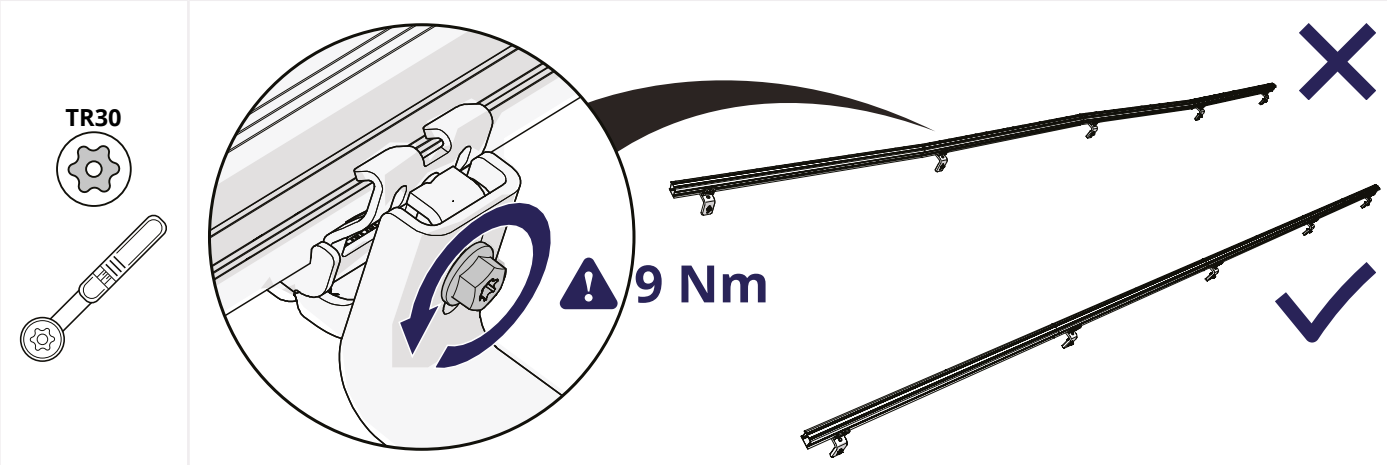

5 OPTIONAL: ATTACHING THE MLPE CLIPS

CLICKFIT EVO MLPE CLIP LIGHT WEIGHT

1 CLICK THE LIGHT WEIGHT MLPE CLIP ONTO THE RAIL
2 CLICK THE OPTIMISER ON THE LIGHT WEIGHT MLPE CLIP

Use one MLPE clip per solar panel.

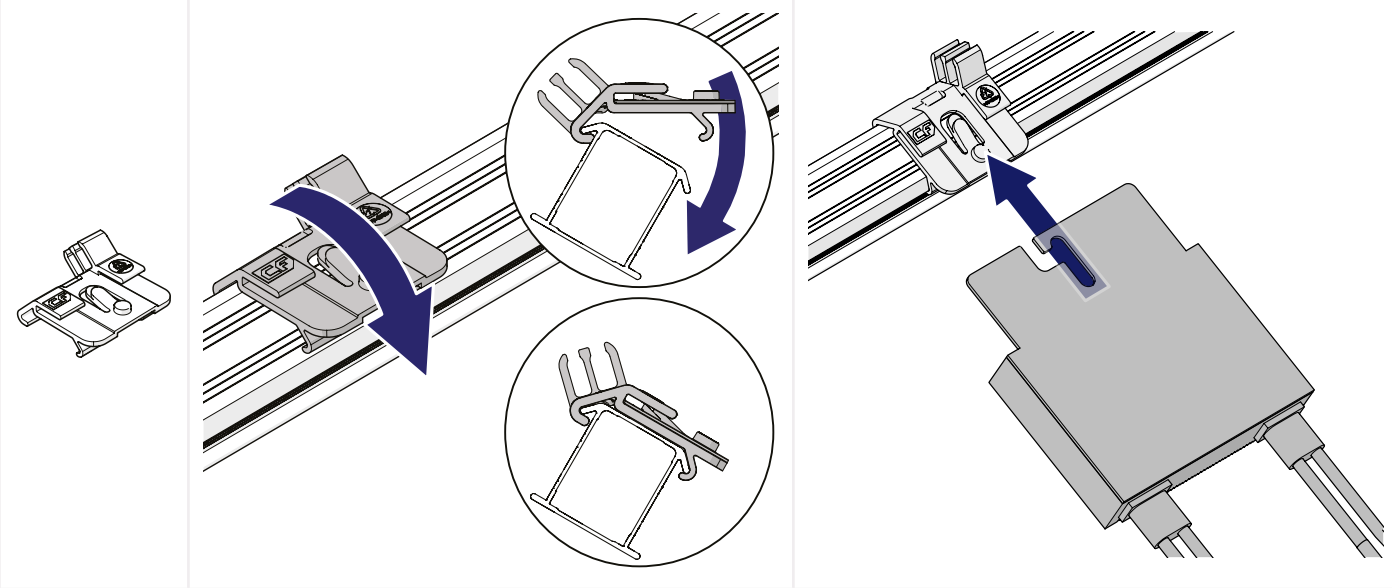

With vertical rail orientation you have to fix the MLPE clip by bending the edge of the mounting rail with adjustable pliers.

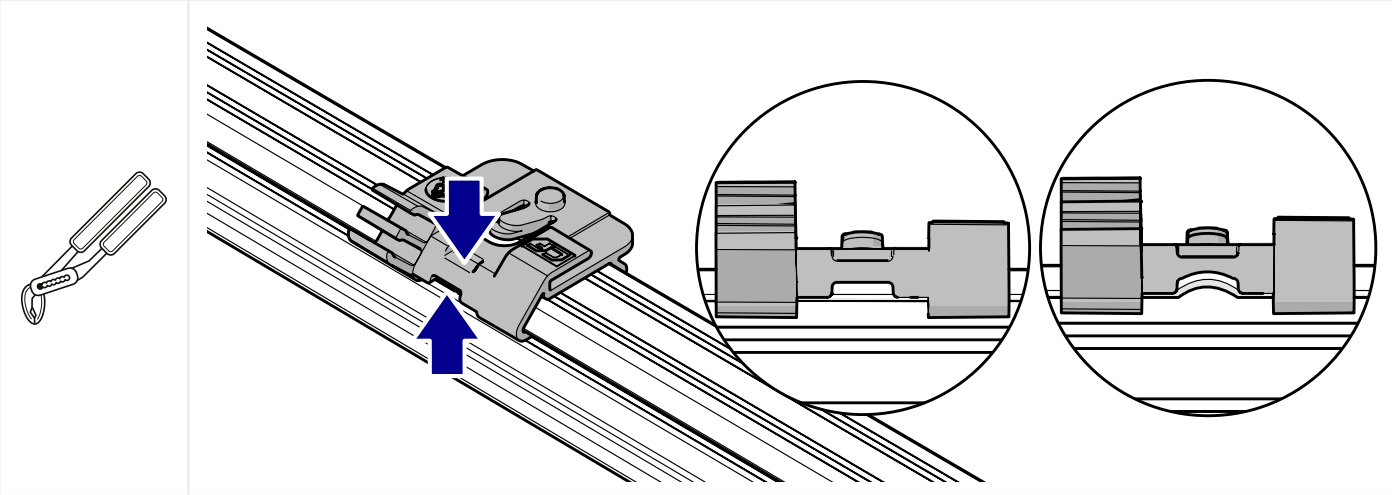

CLICKFIT EVO MLPE CLIP HEAVY WEIGHT

1 ATTACH THE OPTIMISER TO THE HEAVY WEIGHT MLPE CLIP
2 CLICK THE HEAVY WEIGHT MLPE CLIP ONTO THE RAIL

- For larger optimizers (equipped with 2 slots), it is essential to use two Heavy Weight MLPE clips.
- With vertical rail orientation you have to fix the cable clip by bending the edge of the mounting rail with adjustable pliers.

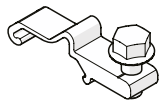

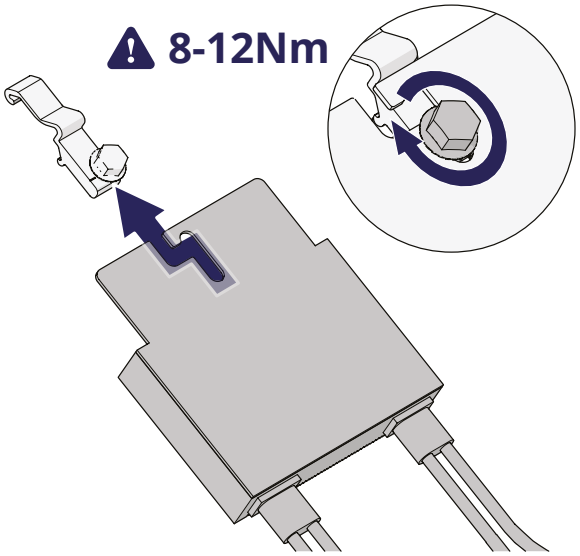

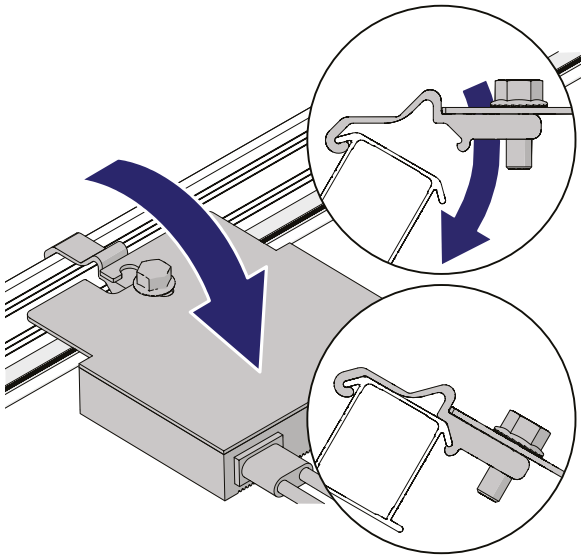

MOUNTING SOLAR PANELS WITH 60MM PANEL CLAMPS

1 MOUNTING THE FIRST PANEL

1 OPTIONAL: CLICK THE AUXILIARY SET ON THE PANEL.

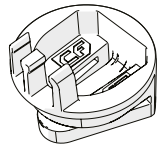

2×

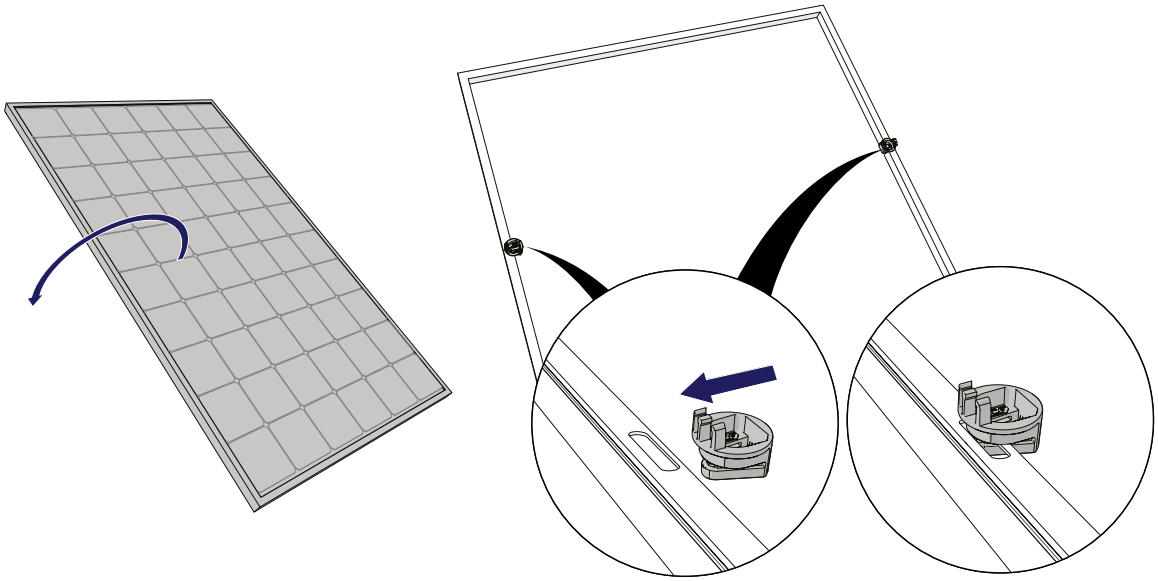

2 OPTIONAL: CLICK THE CABLES OF THE PANEL FIRMLY INTO THE CABLE CLAMP.

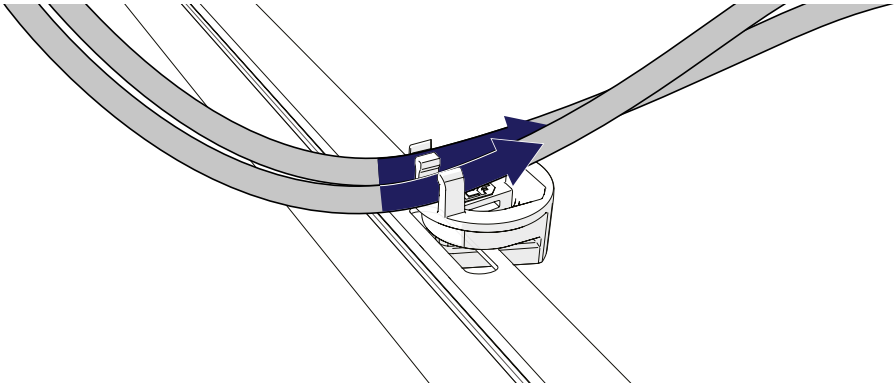

3 SLIDE THE END CAPS ONTO THE RAILS.

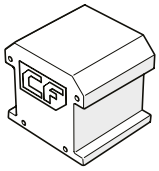

2×

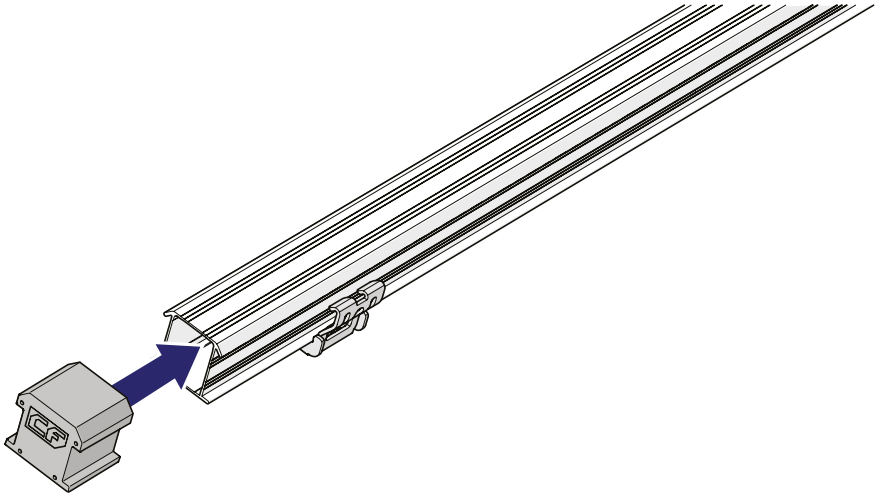

4 CLICK THE CLICKFIT EVO 60 END CLAMPS ON THE RAILS.

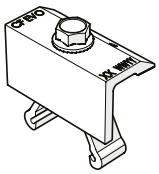

2×

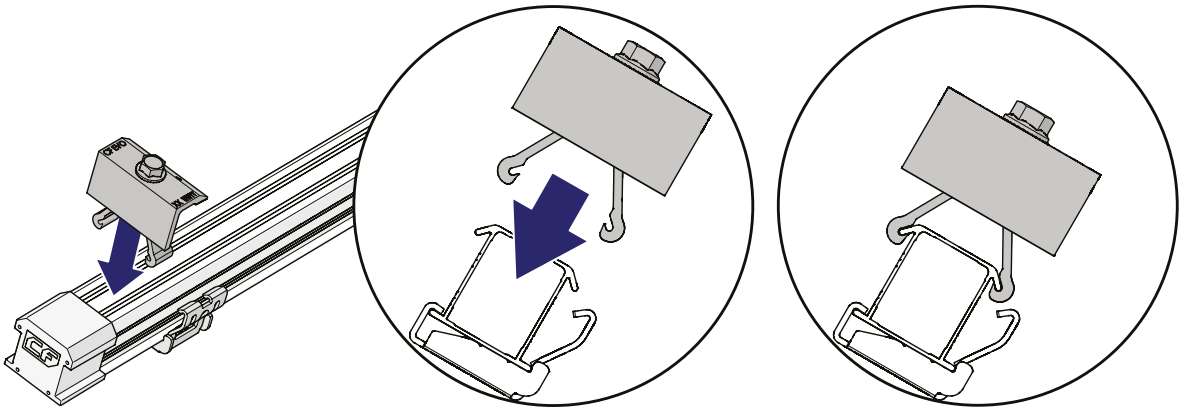

5 OPTIONAL: GUIDE THE CABLES OF THE SOLAR PANEL THROUGH THE CLICK CONNECTIONS.

6 PLACE THE PANEL ON THE RAILS AND SLIDE THE PANEL AGAINST THE CLAMPS.

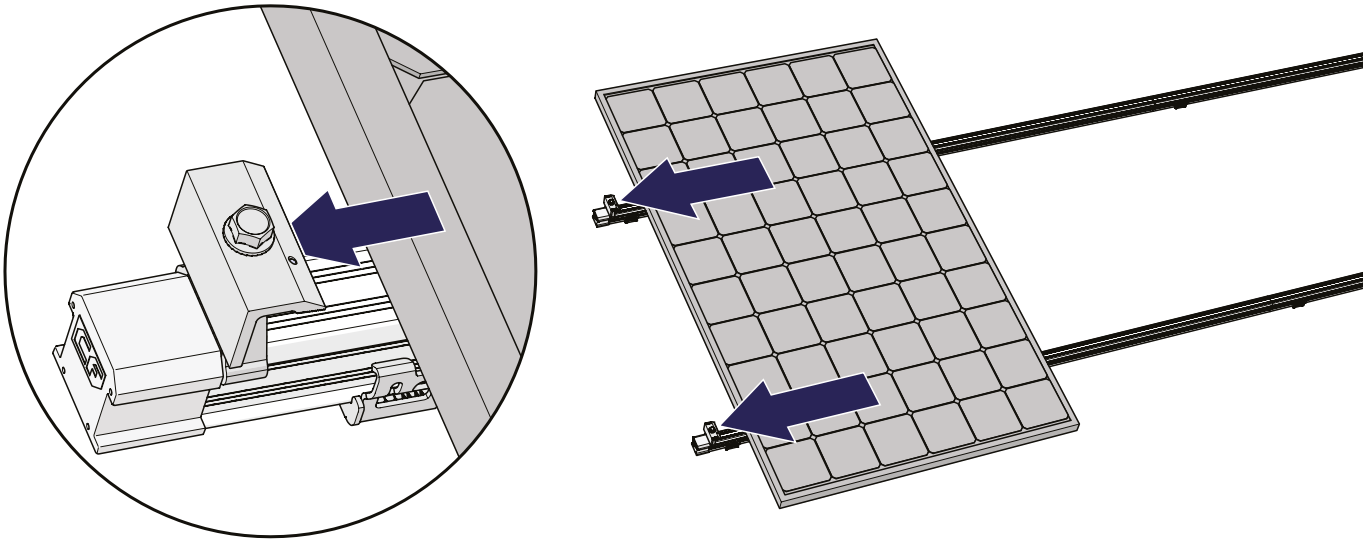

7 FASTEN THE SCREW OF THE END CLAMPS TO SECURE THE PANEL. APPLY A TORQUE OF 16.5 NM.

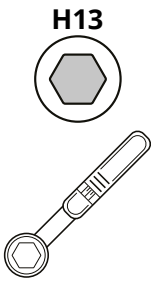

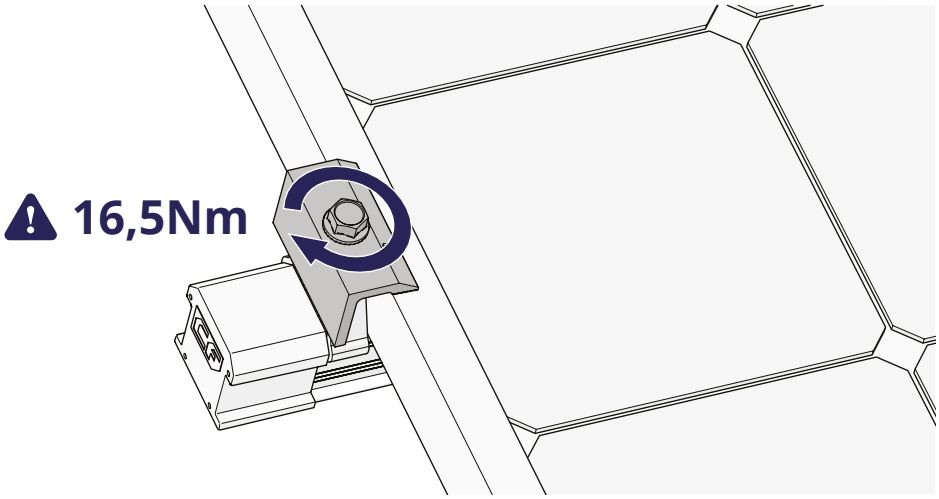

2 MOUNTING THE FOLLOWING PANELS

1 CLICK THE 60MM MID CLAMPS ON THE RAILS.

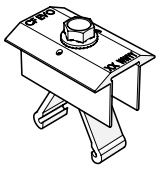

2×

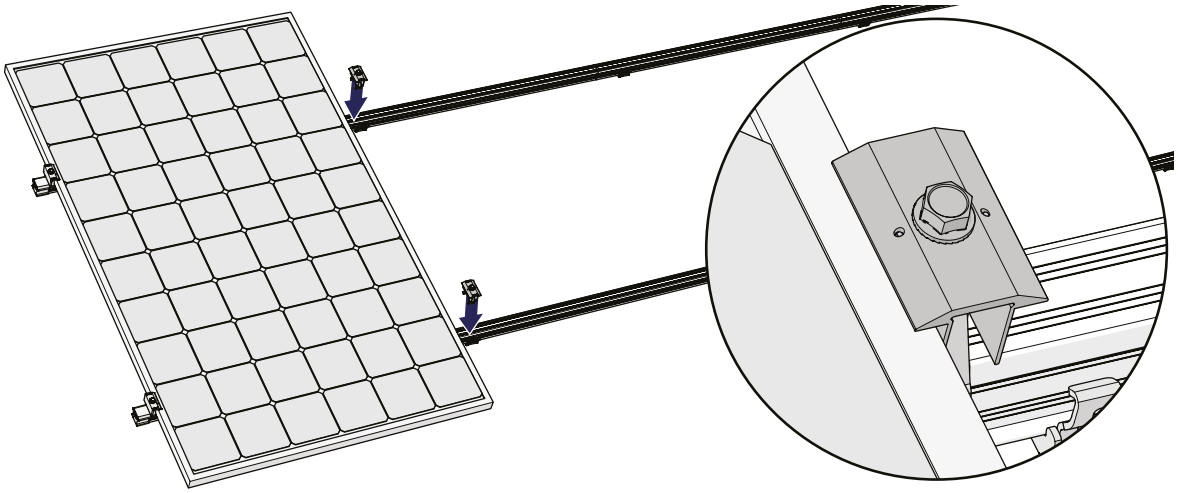

Optional: Repeat steps 1.1. and 1.2.: Click the Auxiliary set on the panel and Click the cables of the panel firmly into the cable clamp.

2 PLACE THE NEXT PANEL ON THE RAILS AND SLIDE THE PANEL AGAINST THE CLAMPS.

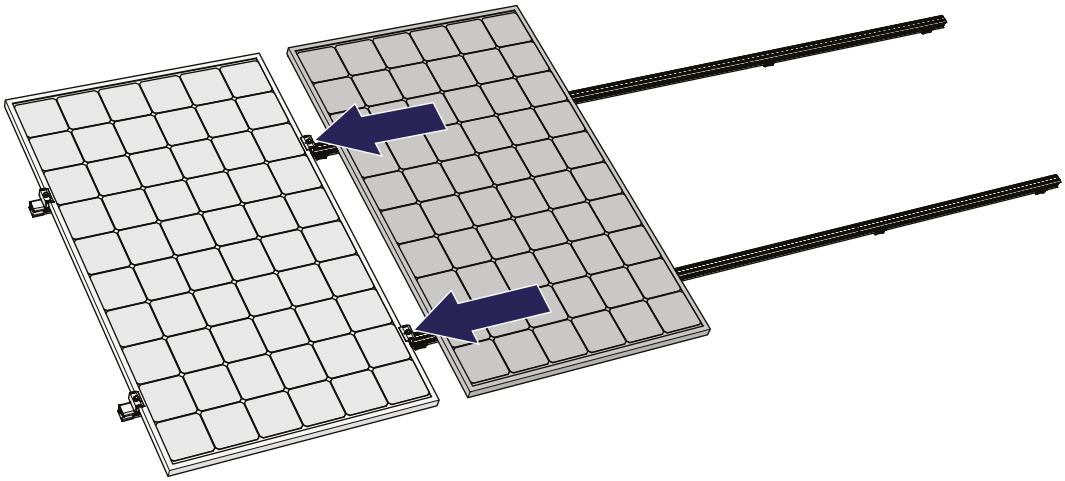

3 FASTEN THE SCREW OF THE MID CLAMPS TO SECURE THE PANEL. APPLY A TORQUE OF 16.5 NM.

H13

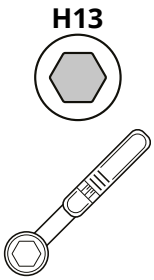

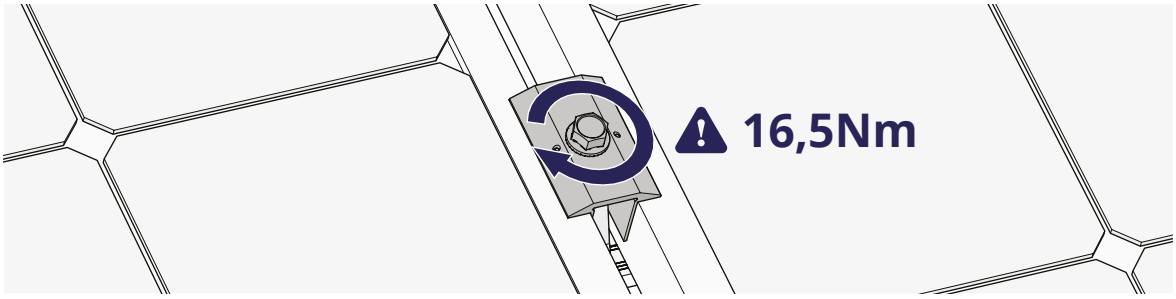

Repeat the steps in this chapter for all panels of the row.

3 MOUNTING THE LAST PANEL

Optional: Repeat steps 1.1. and 1.2.: Click the Auxiliary set on the panel and click the cables of the panel firmly into the cable clamp.

1 CLICK THE CLICKFIT EVO 60 END CLAMPS ON THE RAILS.
2 FASTEN THE SCREW OF THE END CLAMPS TO SECURE THE PANEL. APPLY A TORQUE OF 16.5 NM.

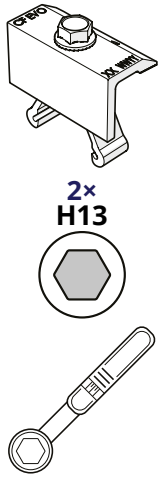

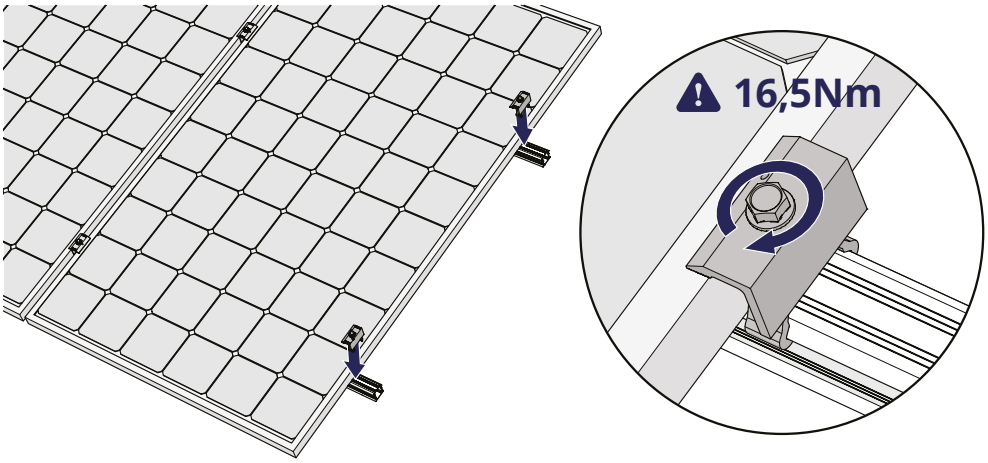

3 SLIDE THE END CAPS ONTO THE RAILS.

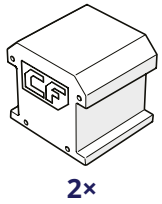

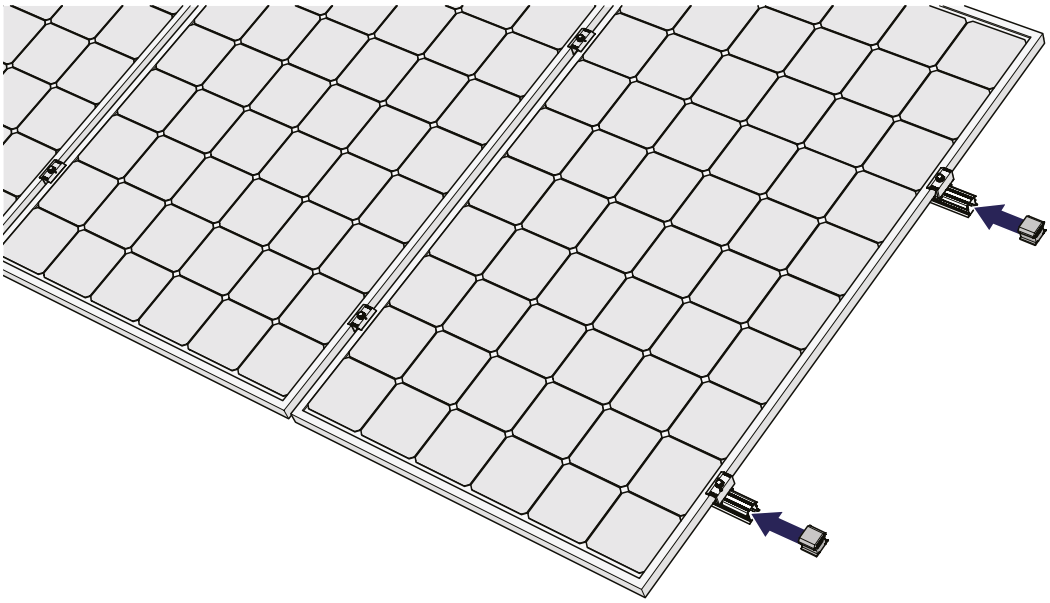

MOUNTING THE SOLAR PANELS WITH 35 MM PANEL CLAMPS

1 MOUNTING THE FIRST PANEL

1 OPTIONAL: CLICK THE AUXILIARY SET ON THE PANEL.

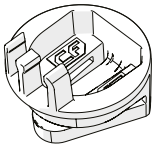

2×

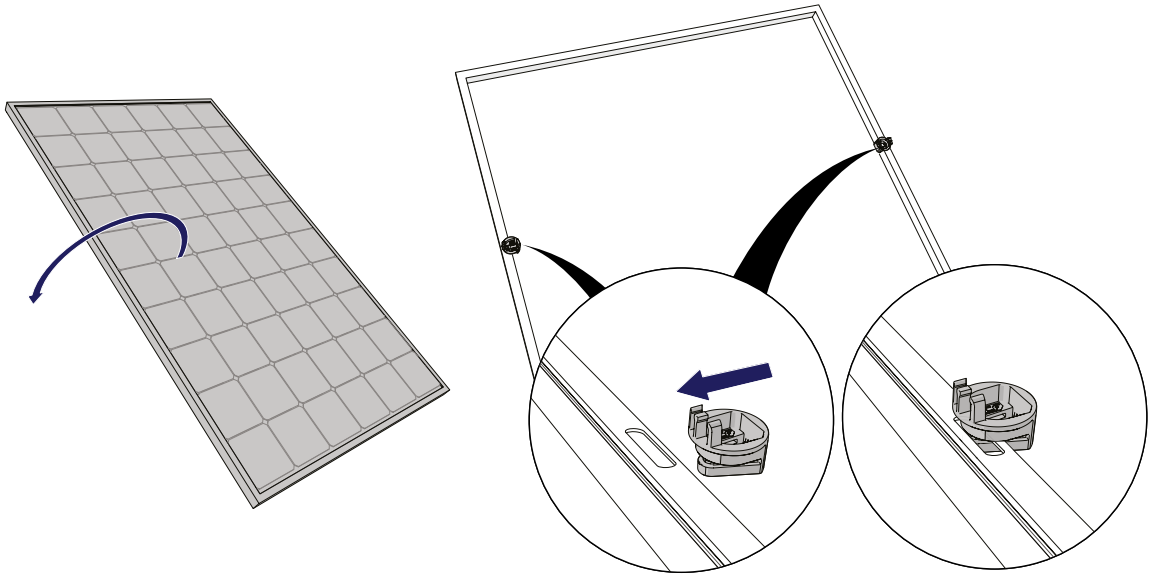

2 OPTIONAL: CLICK THE CABLES OF THE PANEL FIRMLY INTO THE CABLE CLAMP.

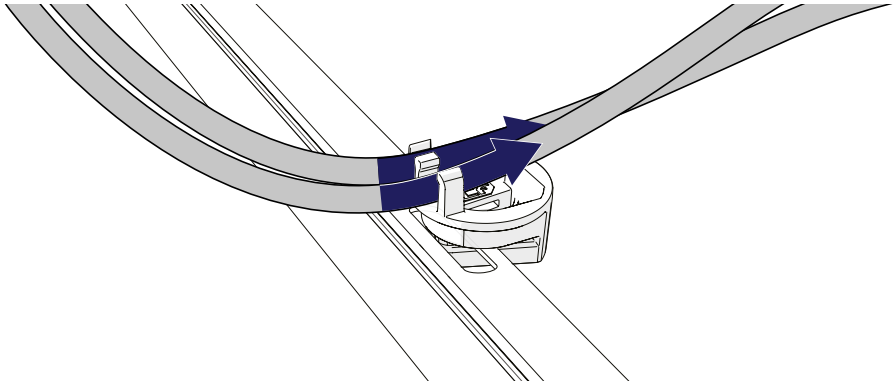

3 CLICK THE 35MM MODULE CLAMP ON THE RAILS.

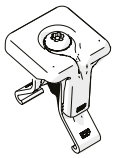

2×

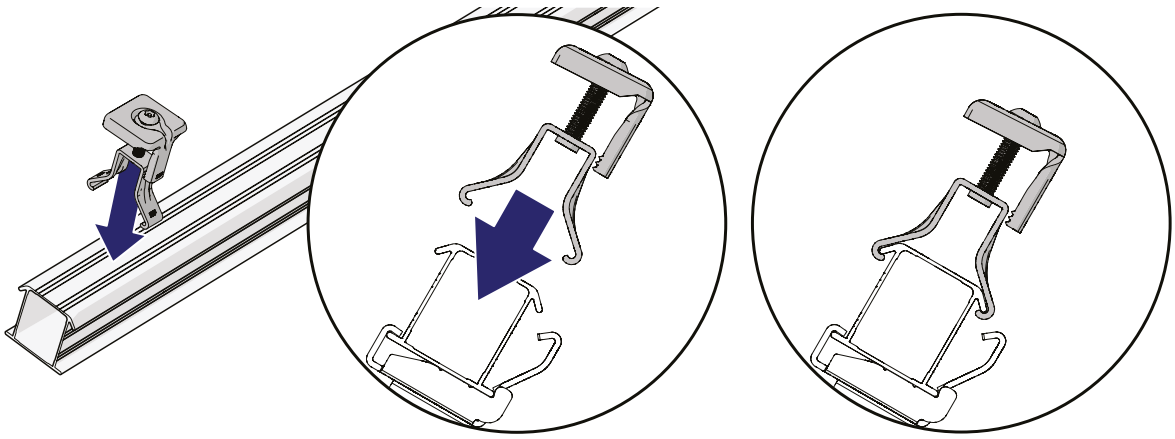

4 SLIDE THE END CAPS ONTO THE RAILS.

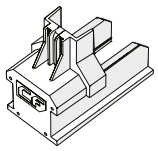

2×

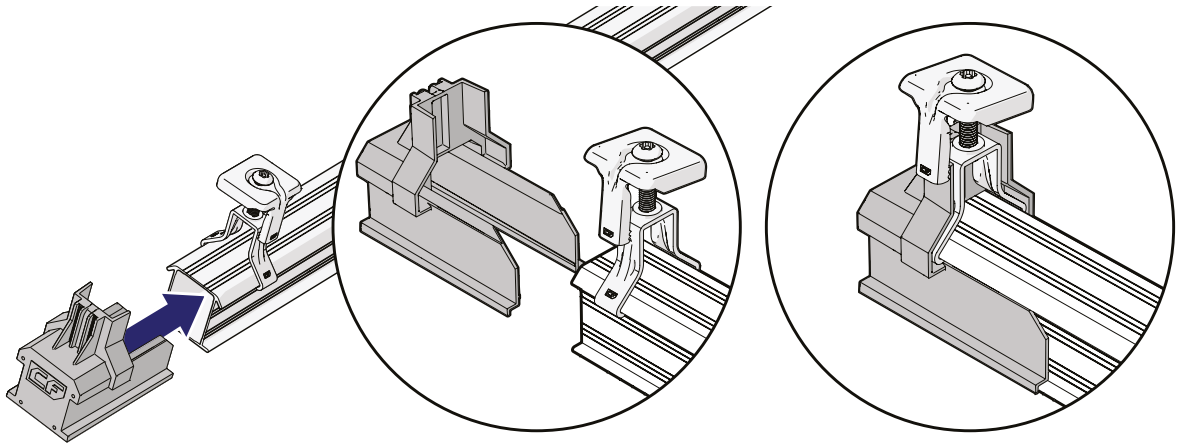

5 ROTATE THE UPPER PART OF THE MODULE CLAMP OVER THE END CAP.

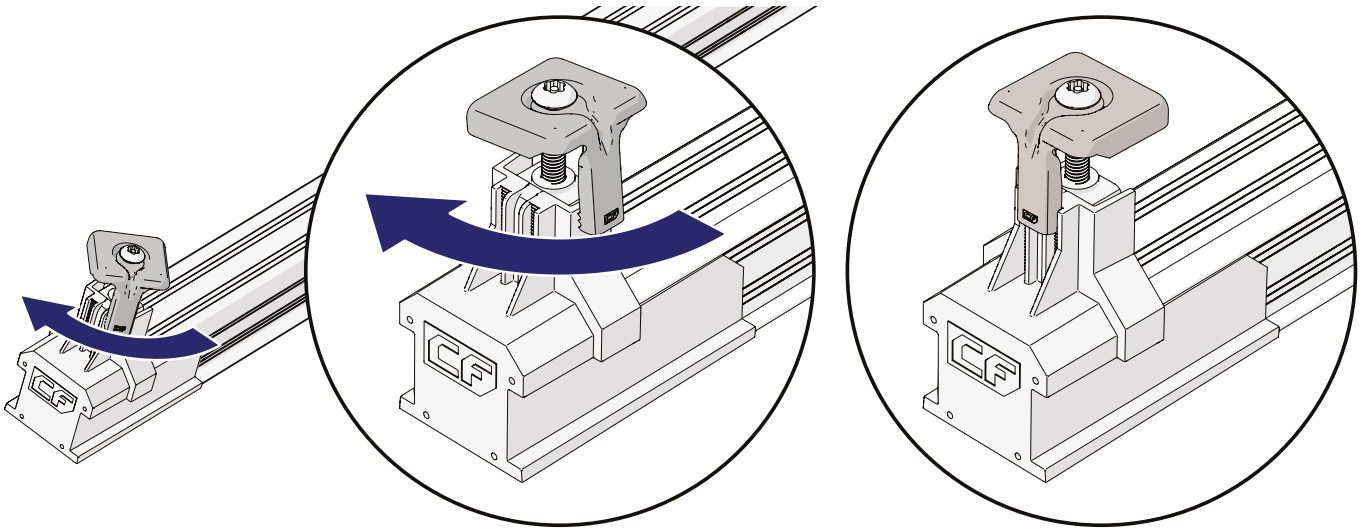

6 OPTIONAL: GUIDE THE CABLES OF THE SOLAR PANEL THROUGH THE CLICK CONNECTIONS.

7 PLACE THE PANEL ON THE RAILS AND SLIDE THE PANEL AGAINST THE CLAMPS.

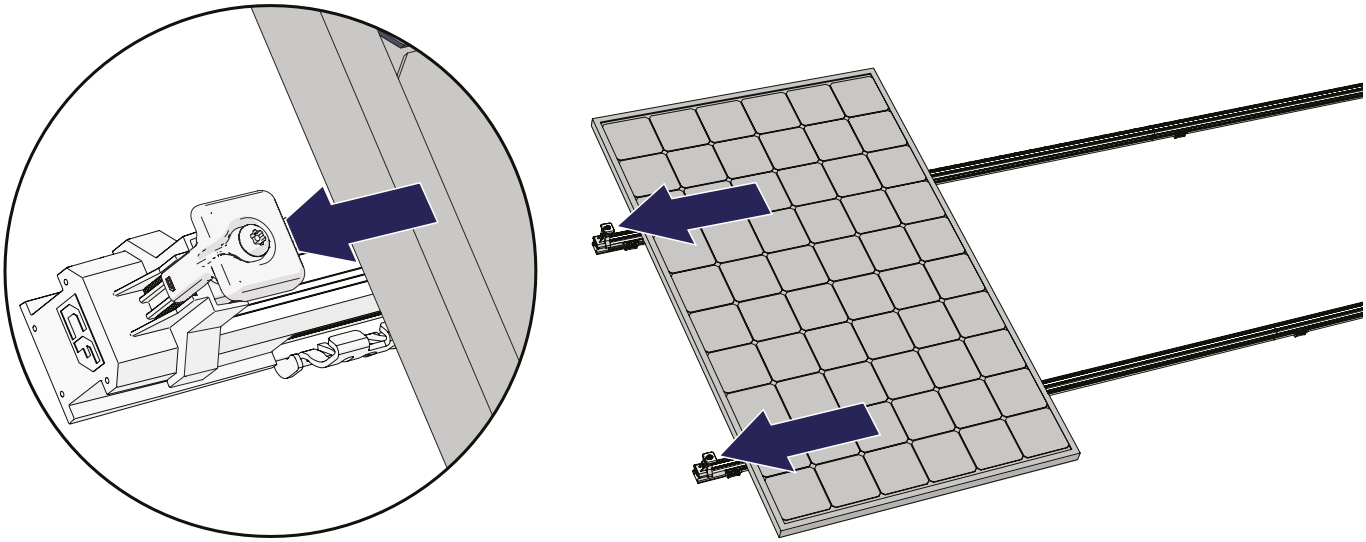

8 SCREW THE CLAMPS ONTO THE PANEL. APPLY A TORQUE OF 4.5 NM.

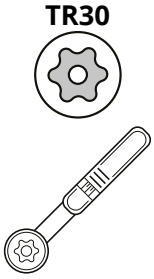

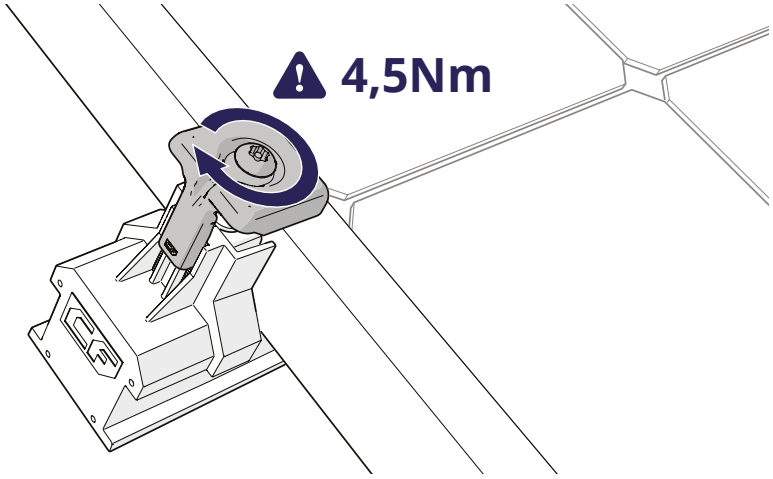

2 MOUNTING THE FOLLOWING PANELS

1 CLICK THE UNIVERSAL MODULE CLAMP ON THE RAILS.

Install the module clamp with the drainage channel of the module clamp pointing downwards.

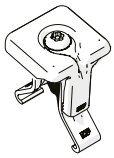

2×

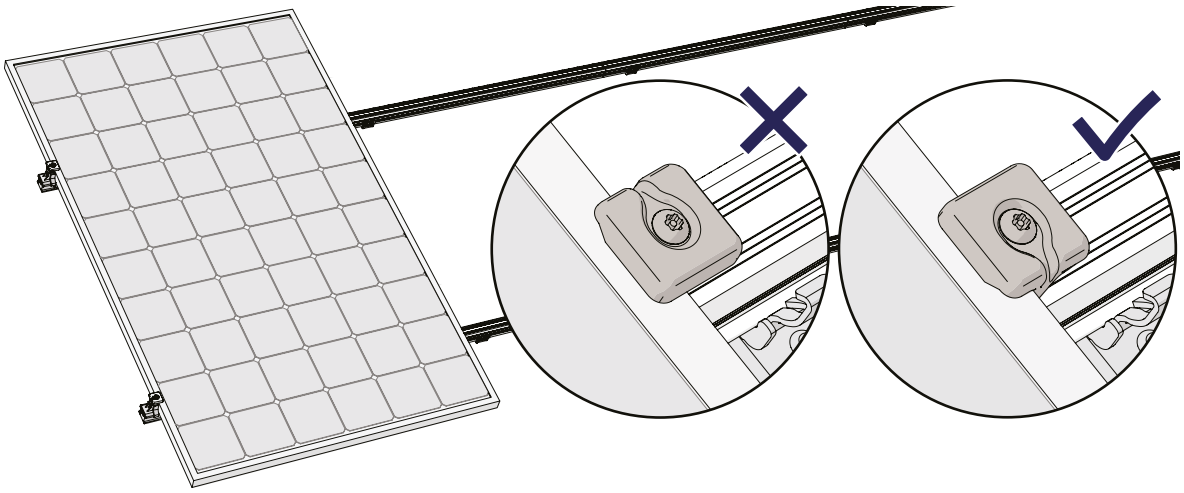

Optional: Repeat steps 1.1. and 1.2.: Click the Auxiliary set on the panel and Click the cables of the panel firmly into the cable clamp.

2 PLACE THE NEXT PANEL ON THE RAILS AND SLIDE THE PANEL AGAINST THE CLAMPS.

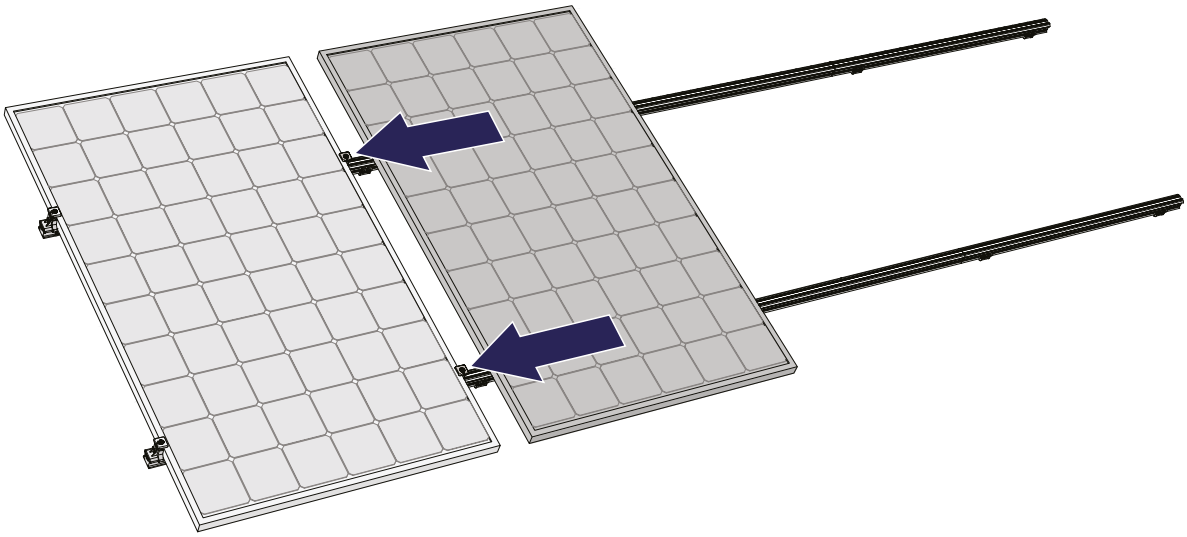

3 SCREW THE CLAMPS ONTO THE PANEL. APPLY A TORQUE OF 4.5 NM.

TR30

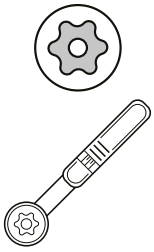

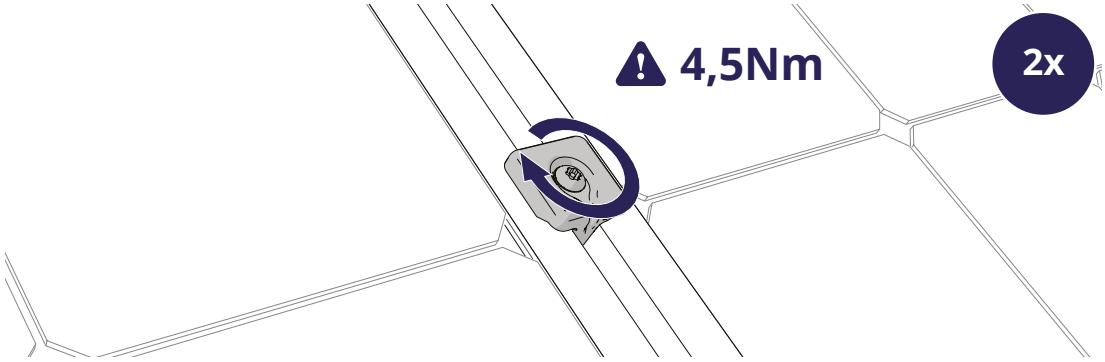

☐	Repeat the steps in this chapter for all panels of the row.

3 MOUNTING THE LAST PANEL

☐	Optional: Repeat steps 1.1. and 2.: Click the Auxiliary set on the panel and Click the cables of the panel firmly into the cable clamp.
☐	Repeat step 2.2. Place the next panel on the rails and slide the panel against the clamps.

4 CLICK THE UNIVERSAL MODULE CLAMP ON THE RAILS.

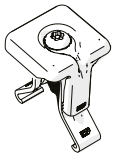

2×

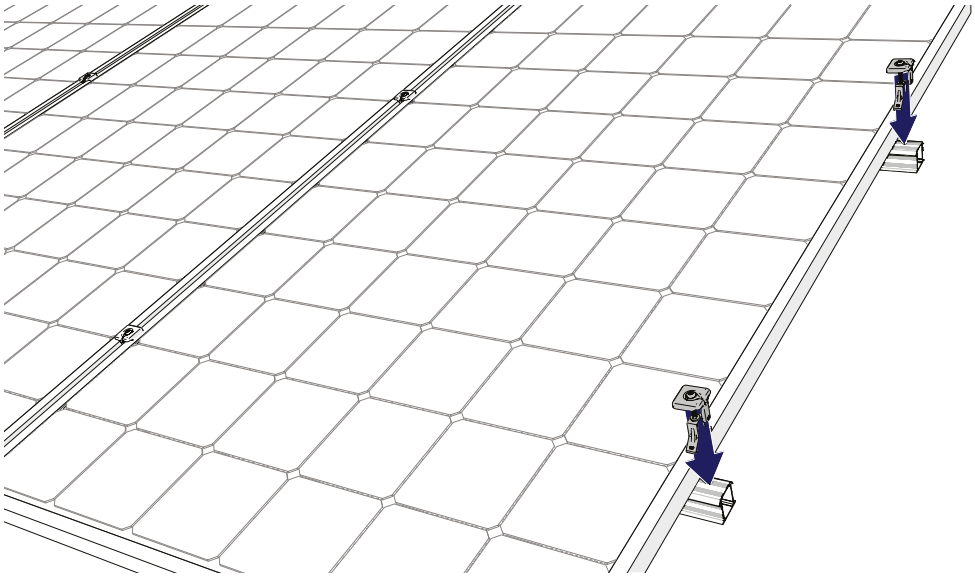

5 SLIDE THE END CAPS ONTO THE RAILS.

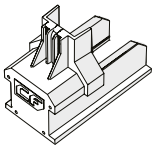

2×

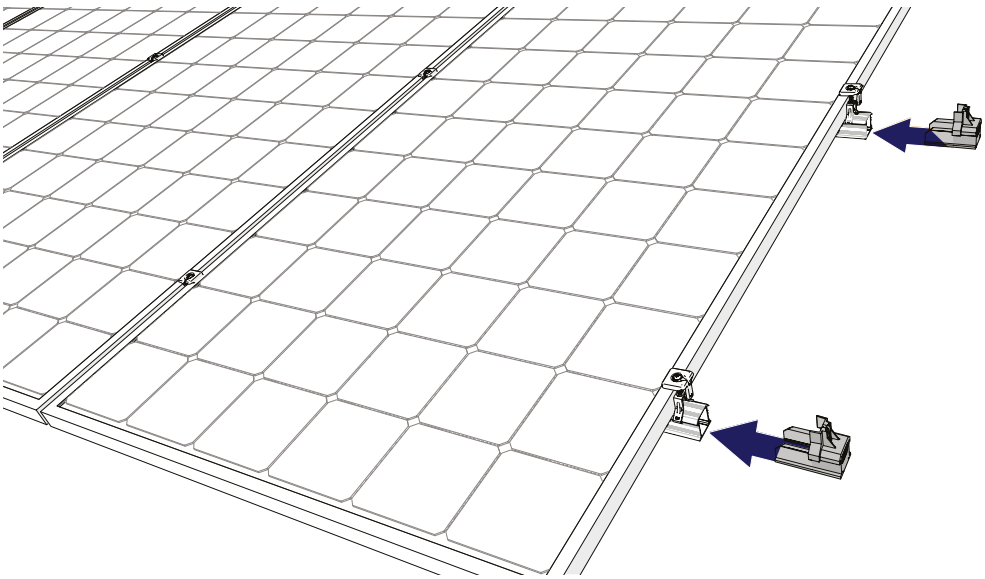

6 ROTATE THE UPPER PART OF THE MODULE CLAMP OVER THE END CAP.

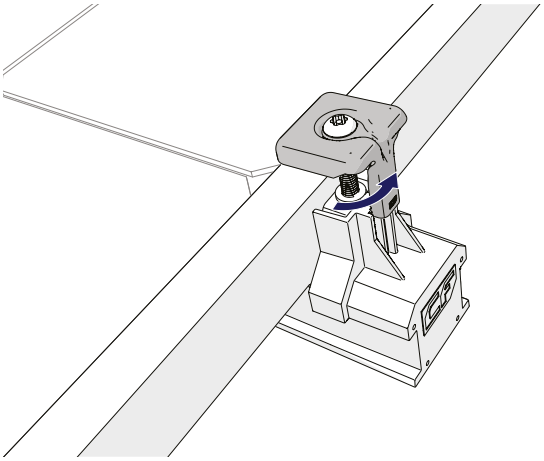

7 SCREW THE CLAMPS ONTO THE PANEL. APPLY A TORQUE OF 4.5 NM.

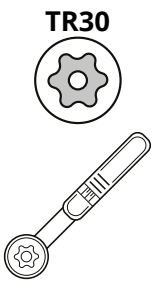

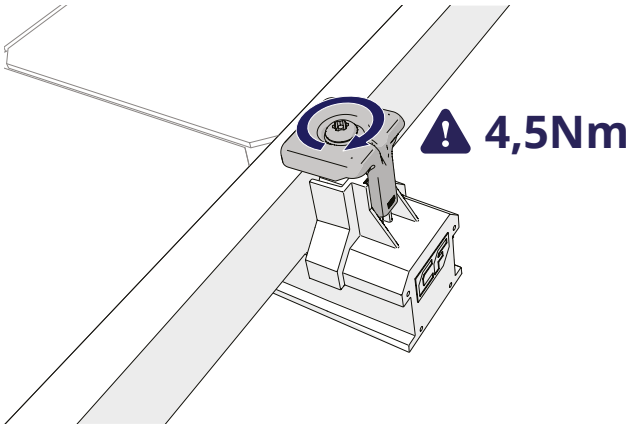

4 MOUNTING MULTIPLE ROWS

1 MOUNT EACH NEXT ROW AGAINST THE PREVIOUS ROW

- Always keep a minimum of 12 mm between each row of panels in the case of horizontal rails, or each panel column in the case of vertical rails.
- Always follow the project plan from the calculator.

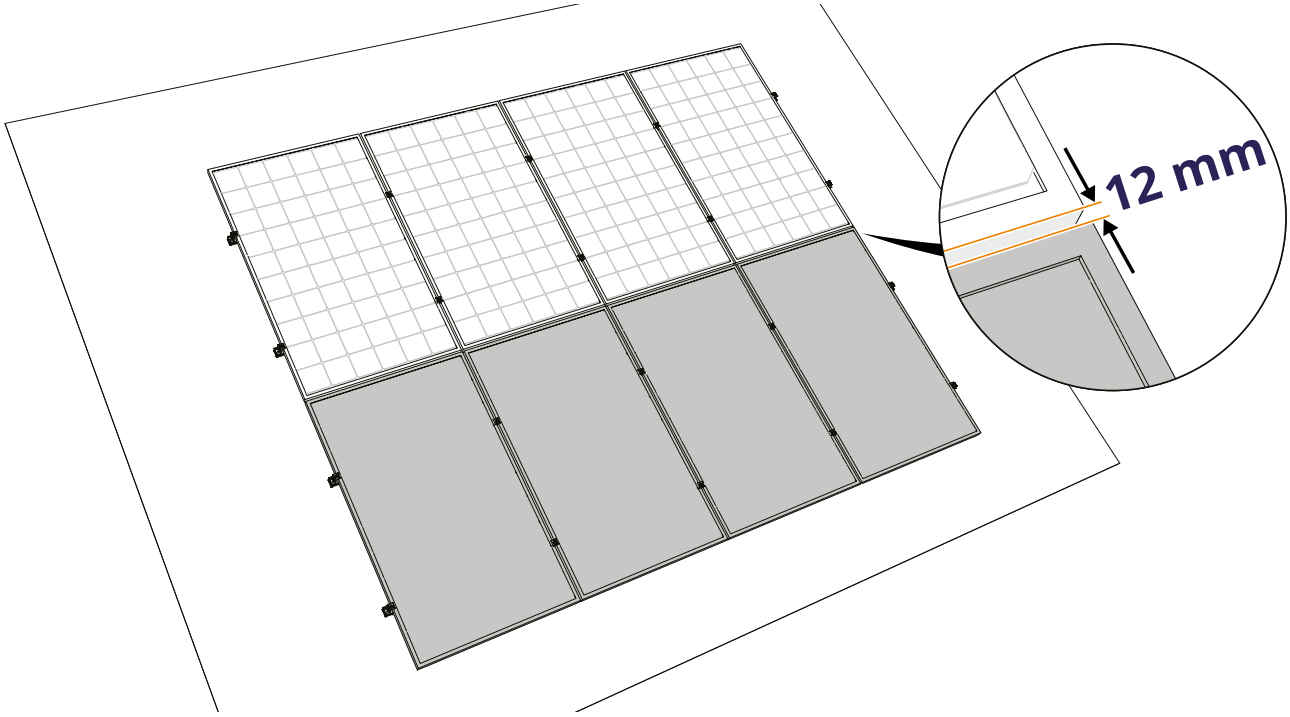

REMOVAL AND RECYCLING

GENERAL

Always follow local laws and regulations when dismantling the mounting system and disposing of it.

BUILDING VALUE FOR SOLAR PROFESSIONALS

Esdec
Londenstraat 16
7418 EE Deventer
The Netherlands

+31 850 702 000
info@esdec.com

260924