Connecting Strength

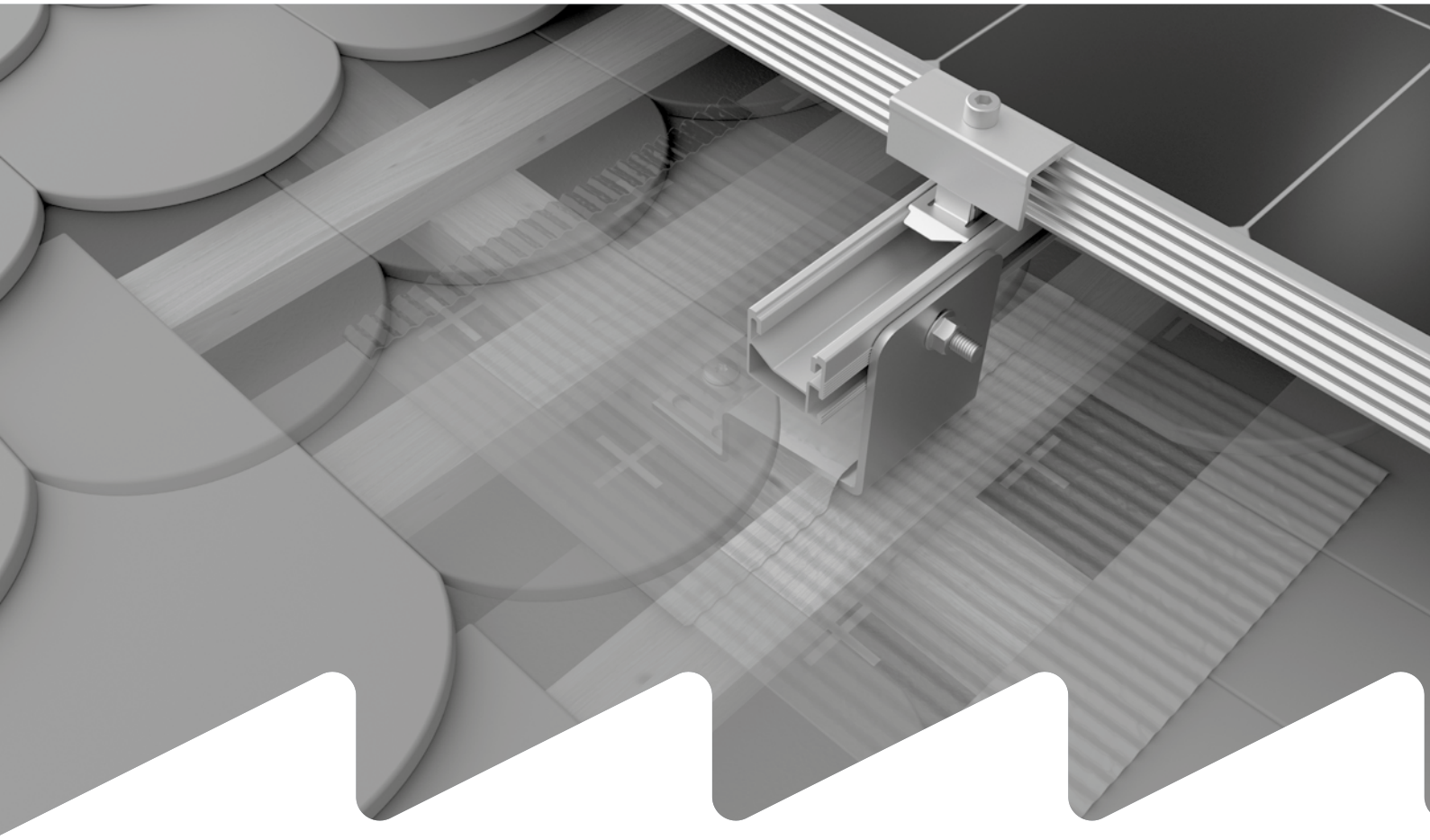

Assembly instructions

SingleRail System

Roof hook flat tile

Inhalt

- **Tools overview** **3**
- **General safety information** **4**
- **The following guidelines apply** **5**
  - Planning with K2 Base 5
  - Roof requirements 5
  - Important mounting instructions 5
- **Components** **6**
  - Portrait assembly 6
  - Additional components landscape assembly 8
- **Assembly** **9**
  - Portrait double roofing step 1 - 5 9
  - Portrait Crown covering Step 1 - 5 12
  - Portrait step 6 - 10 15
  - Landscape 18
- **Optional** **21**
  - BlackCover 21
  - EndCap 21
- **Notes** **22**

Quality tested - multiple certifications

K2 Systems stands for secure connections, highest quality and precision. Our customers and business partners have known that for a long time. Independent institutes have tested, confirmed and certified our capabilities and components.

Please find our quality and product certificates under:
k2-systems.com/en/technical-information

Tools overview

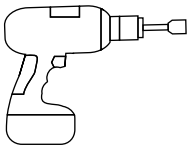

6 mm

13 mm

25 / 40

6 - 30 Nm
(4,5 - 22,2 lb-ft)

6 mm

13 mm

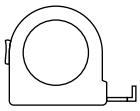

≥ 3,0 m

≥ 6,0 m

Optional

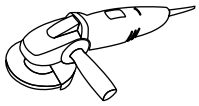

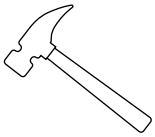

General safety information

Please note that our general mounting instructions must be followed at all times and can be viewed online at k2-systems.com

- The equipment may only be installed and operated by qualified and adequately trained installers.
- Prior to installation, ensure that the product complies with on-site static loading requirements.
  For roof-mounted systems, the roof load-bearing capacity must always be checked.
- National and local building regulations and environmental requirements must be adhered to.
- Compliance with health and safety regulations, accident prevention guidelines and applicable standards is required.
  - Protective equipment such as safety helmet, boots and gloves must be worn.
  - Roofing works must be in accordance with roofing regulations utilising fall protection safeguards when eaves height exceeds 3 m.
  - At least two people must be present for the duration of the installation work in order to provide rapid assistance in the event of an emergency.
- K2 mounting systems are continuously developed and improved and the installation process may thereby change at any time. Prior to installation consult our website at k2-systems.com/en/technical-information for up-to-date instructions.We can send you the latest version on request.
- The assembly instructions of the module manufacturer must be adhered to.
- Equipotential bonding/grounding/earthing between individual parts is to be performed according to country specific standards, as well as national laws and regulations.
- At least one copy of the assembly instructions should be available on site throughout the duration of the installation.
- Failure to adhere to our general safety and assembly instructions and not using all system components, K2 is not liable for any resulting defects or damages. We do not accept liability for any damage resulting in the use of competitor's parts. Warranty is excluded in such cases.
- German law shall apply excluding the UN Convention on CISG. Place of venue is Stuttgart. Our General Terms of Business apply.
- If all safety instructions are adhered to and the system is correctly installed, there is a product warranty entitlement of 12 years! We strongly recommend reviewing our terms of guarantee, which can be viewed at k2-systems.com/en/warranty-terms-and-conditions We will also send this information on request.
- Dismantling of the system is performed in reverse order to the assembly.
- K2 stainless steel components are available in different corrosion resistance classes. Each structure or component must be carefully checked for possible corrosion exposure.

The following guidelines apply

This System can be used without further testing by K2 systems in the following standard conditions. It is also suitable for higher requirements. However, if a value exceeds the standard conditions, please contact K2 Systems.

Planning with K2 Base

We recommend our free online software K2 Base for the planning. In five steps, you can plan the right assembly system and get an installation recommendation, a bill of materials and the structural analysis report. Simply register and start planning: base.k2-systems.com

Roof requirements

- Sufficient holding force of the roof covering at the support or substructure must be ensured on site.
- Roof pitches: 18 - 75°
- Sufficient load reserves to support the PV system

Important mounting instructions

- On-site general standards and regulations for lightning protection must be observed and consultation with a specialist to create a lightning protection concept is recommended (use lightning protection clamp if necessary). Country-specific regulations apply.
- Please refer to our manual "Attach K2 roof hooks with flat head screw" for the installation of all roof hooks k2-systems.com/en/handbook-roof-hooks
- Ensure a thermal separation after a maximum rail length of 17.6 m.
- A minimum mounting distance of 50 mm from the end of the rail/rail joint to the module frame.
- Rail cut SingleRail ≥ 700 mm
- Tightening torque for all module clamps 16 Nm
- The SingleRail 36/50 RailConnector must always be positioned between two roof hooks; meaning, a cantilever extension at the rail edge outside the last roof hook is not permitted.
- Please refer to the module manufacturer's installation manual regarding the clamps.
- Do not step on roof hooks or rails.
- Sizing and positioning of the wood screws are subject to the relevant regulations.
- In case of non-rigid on-roof insulation e.g. mineral fibre, ensure a suitable spacer screw connection between the counter batten and the rafter.
- The following applies to all on-roof insulation materials: With counter-battens >40mm in height the roof hook may be fastened into the counter-battens should these be sufficiently shear and pressure resistant.

Components

Portrait assembly

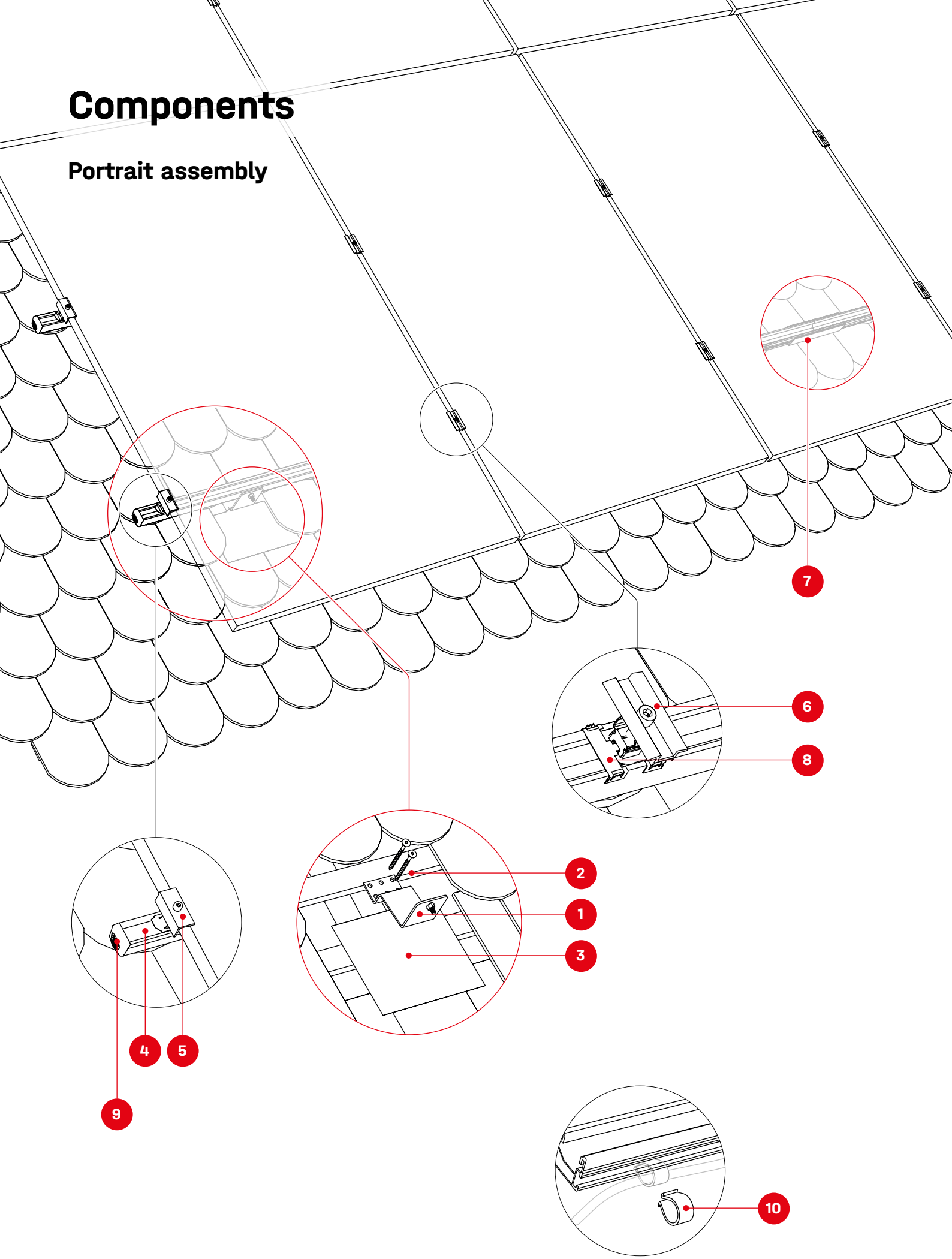

1 2004416, 1002387, 2002744
SingleHook FlatTile,
T-Bolt 20/12, Self-locking hexagon nut serration M8

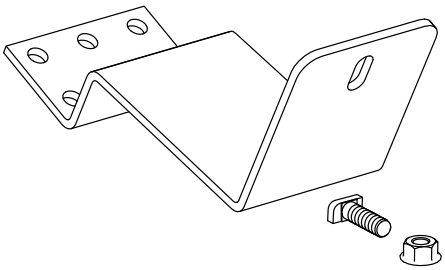

2 Item number system-specific
Wood screw, flat head

3 2004282 / 2004440
SingleHook FlatTile sheet metal red /anthracite

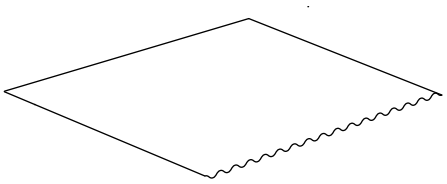

4 Item number system-specific
SingleRail 36/36 Light/50

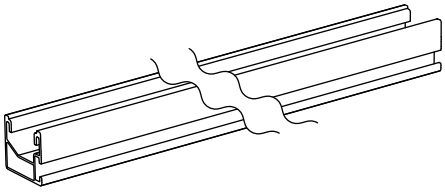

5 Item number system-specific
Module end clamps

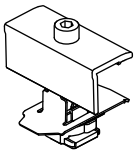

K2 Clamp EC
25 - 40

XS Clamp EC
30 / 33 / 35

6 Item number system-specific
Module middle clamps

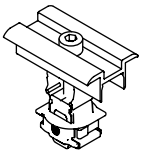

K2 Clamp MC
25 - 40

XS Clamp MC
30 / 33–35

Optional

7 2003605/2001976
SingleRail 36/50
RailConnector /

Rail connector Set
SingleRail 36/50

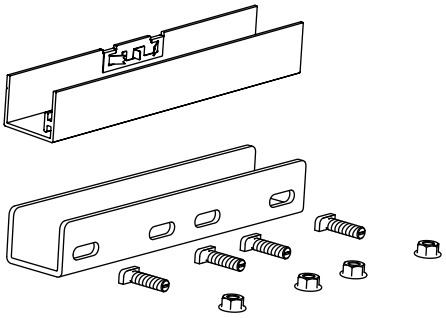

8 2004231
TerraGrif QL

9 1004767/2004911
EndCap SingleRail 36/50

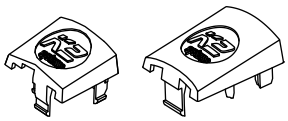

10 1005394
Omega cable clip

2003523/2002907
BlackCover SingleRail 36 /
BlackCover SingleRail 50

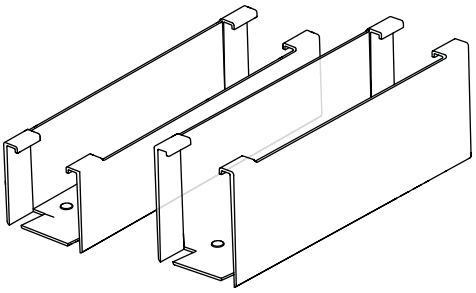

2002870
Cable Manager

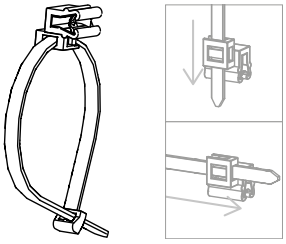

Components

Additional components landscape assembly

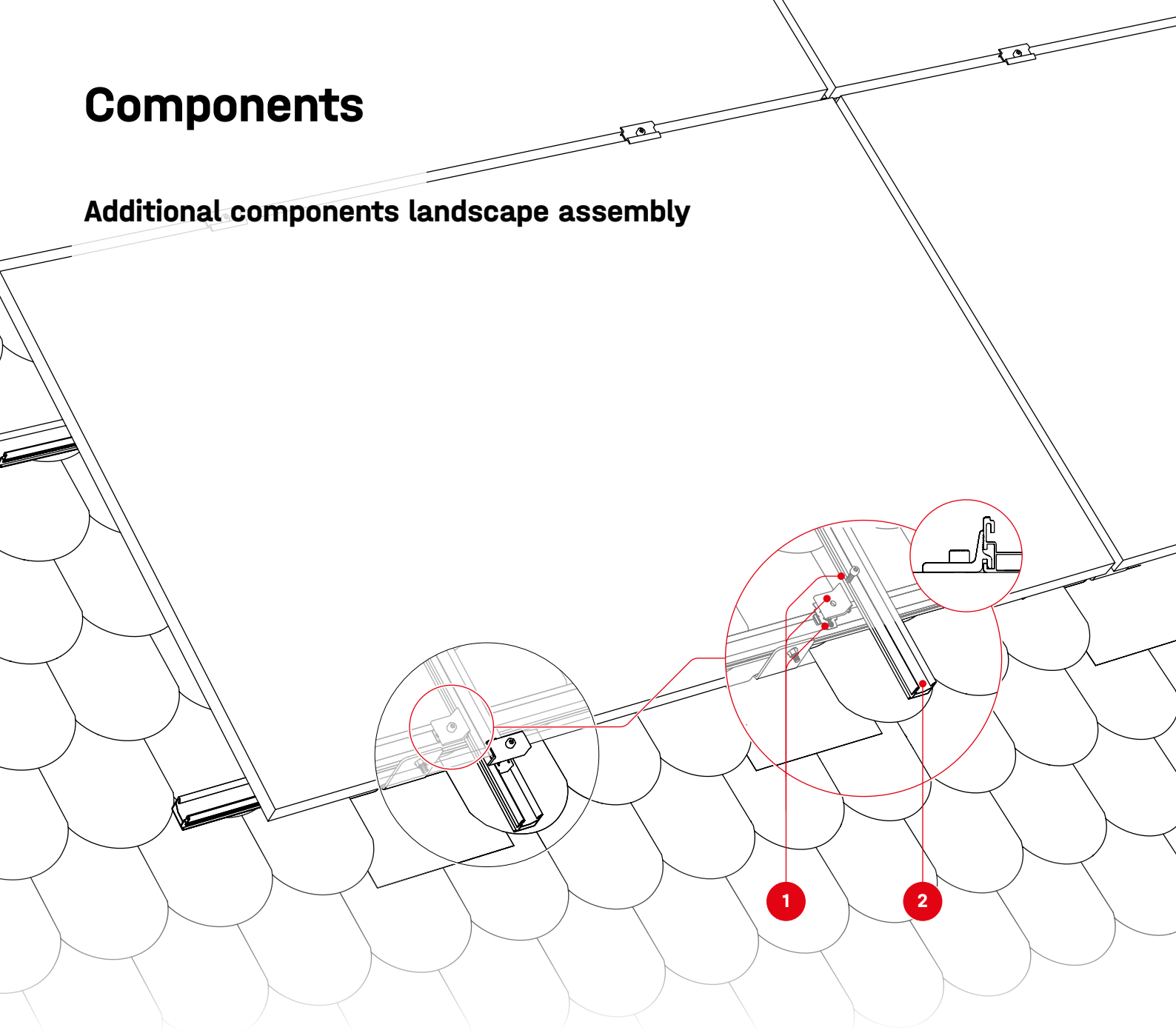

1 2003145
Climber 36/50 Set

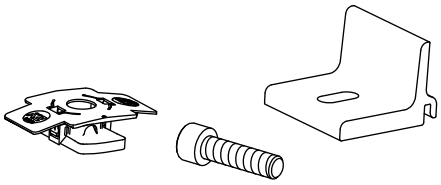

2 Item number system-specific
SingleRail 36/36 Light/50

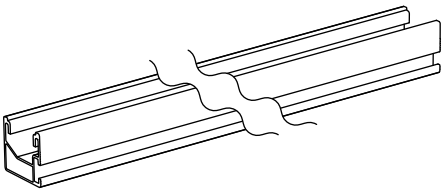

2003605/2001976
SingleRail 36/50 RailConnector / Rail connector Set SingleRail 36/50

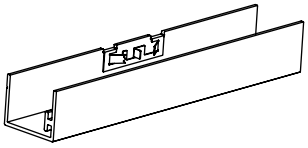

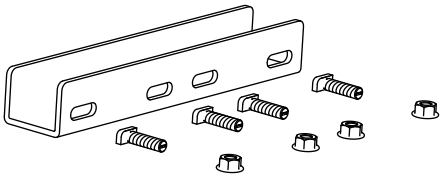

Assembly

Portrait double roofing step 1 – 5

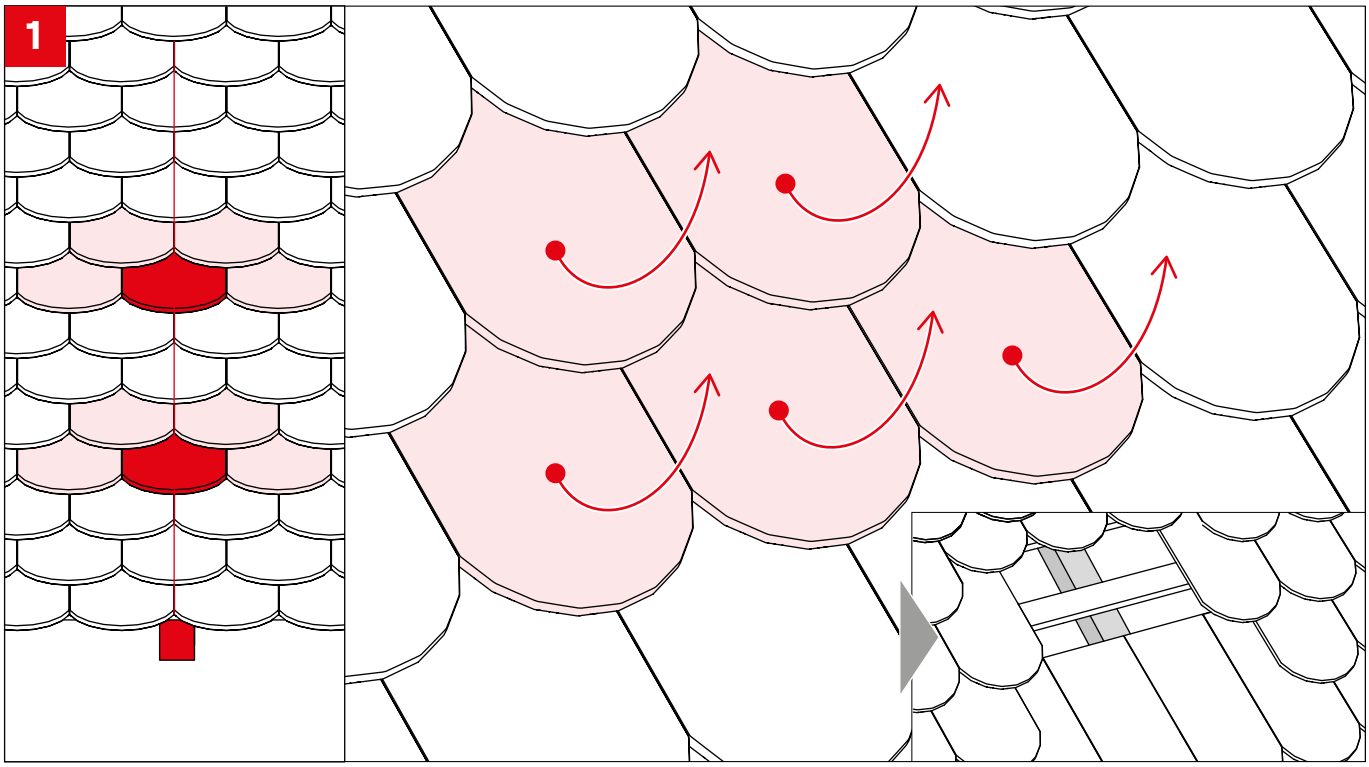

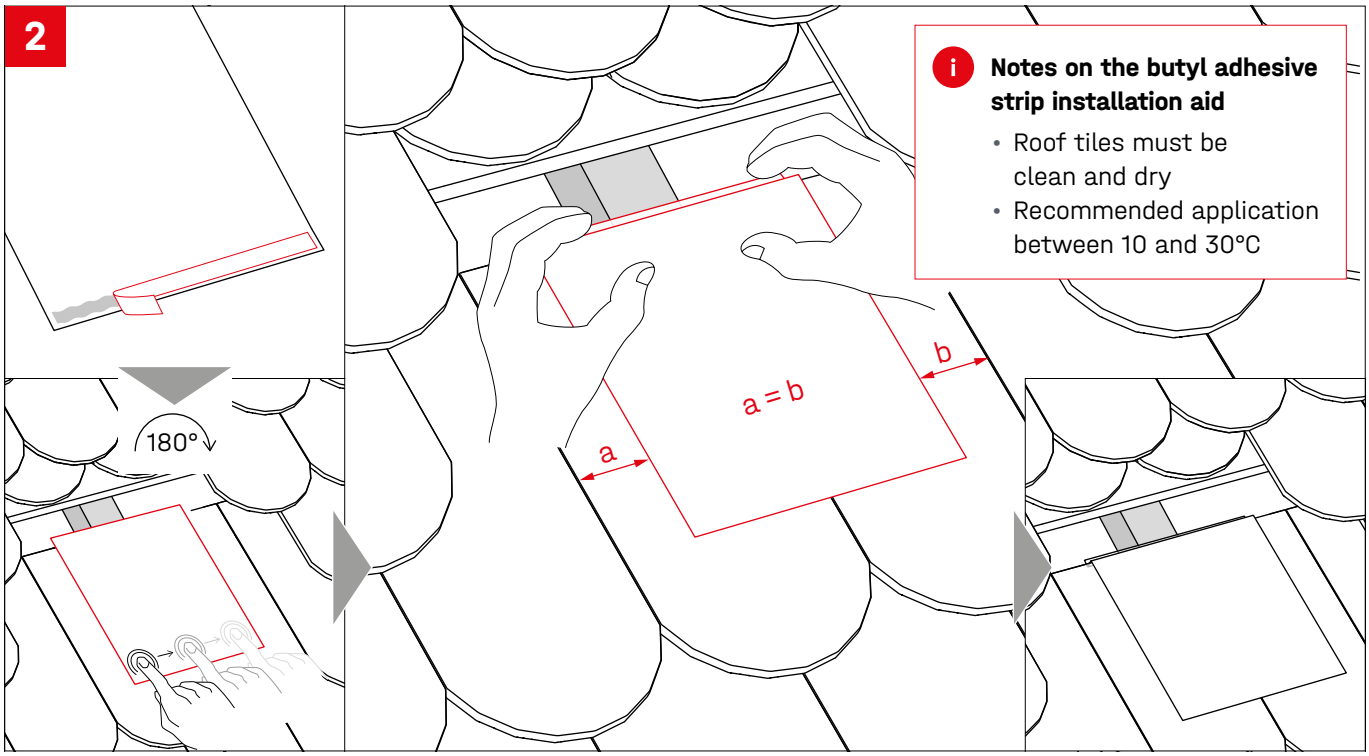

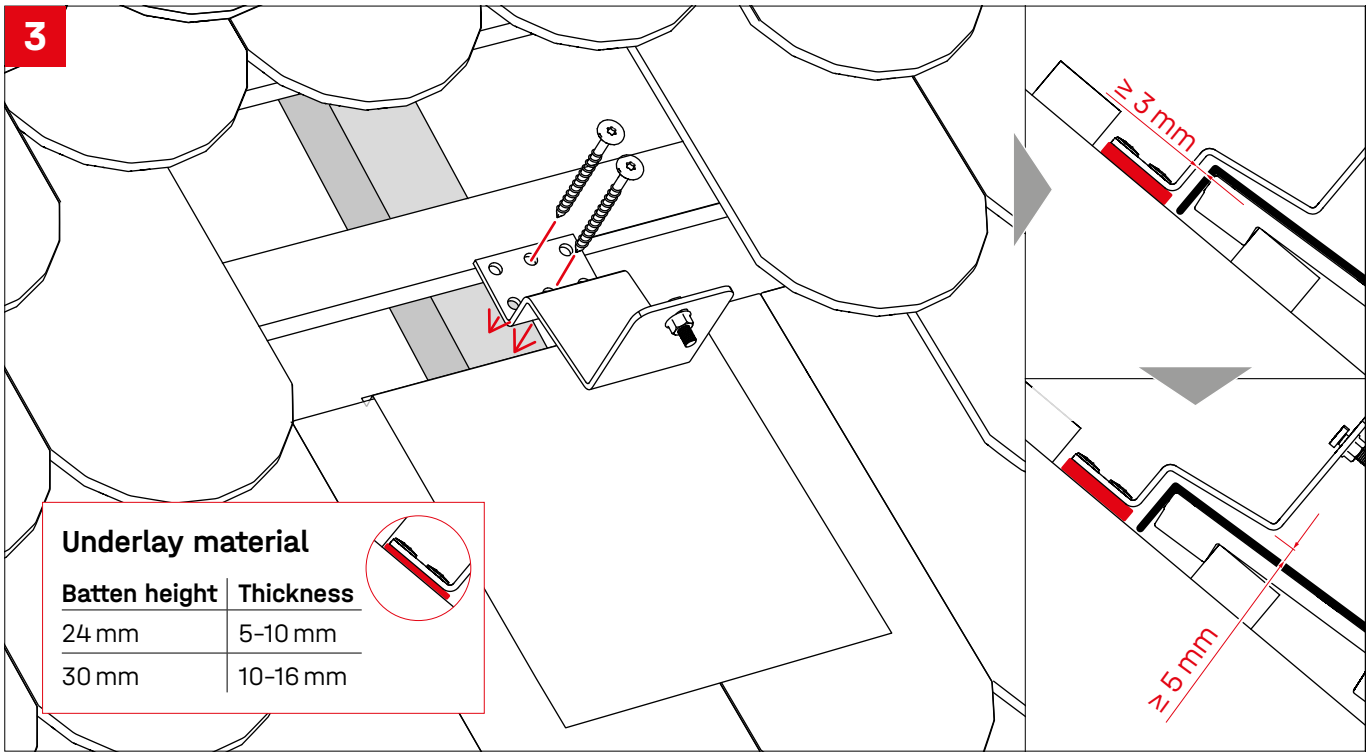
3
≥ 3 mm
≥ 5 mm
Underlay material
Batten height | Thickness
24 mm | 5–10 mm
30 mm | 10–16 mm

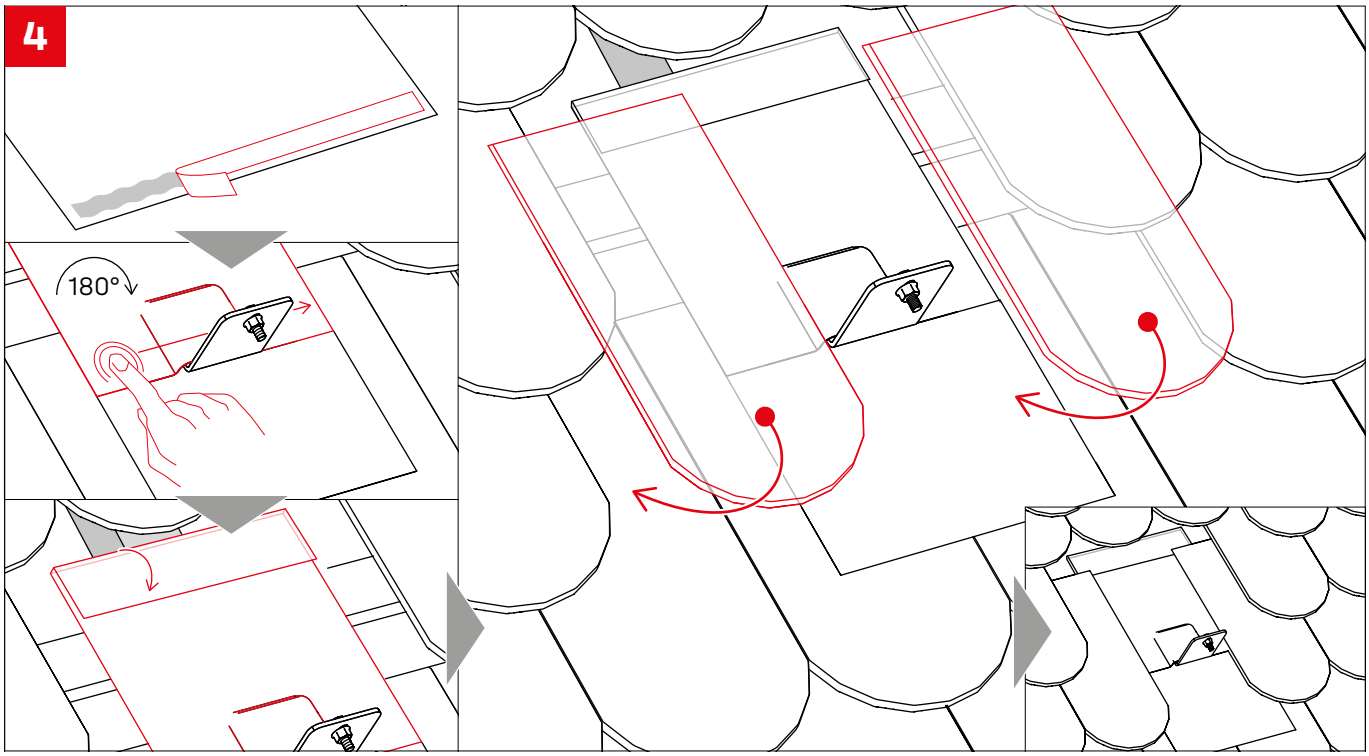
4
180°

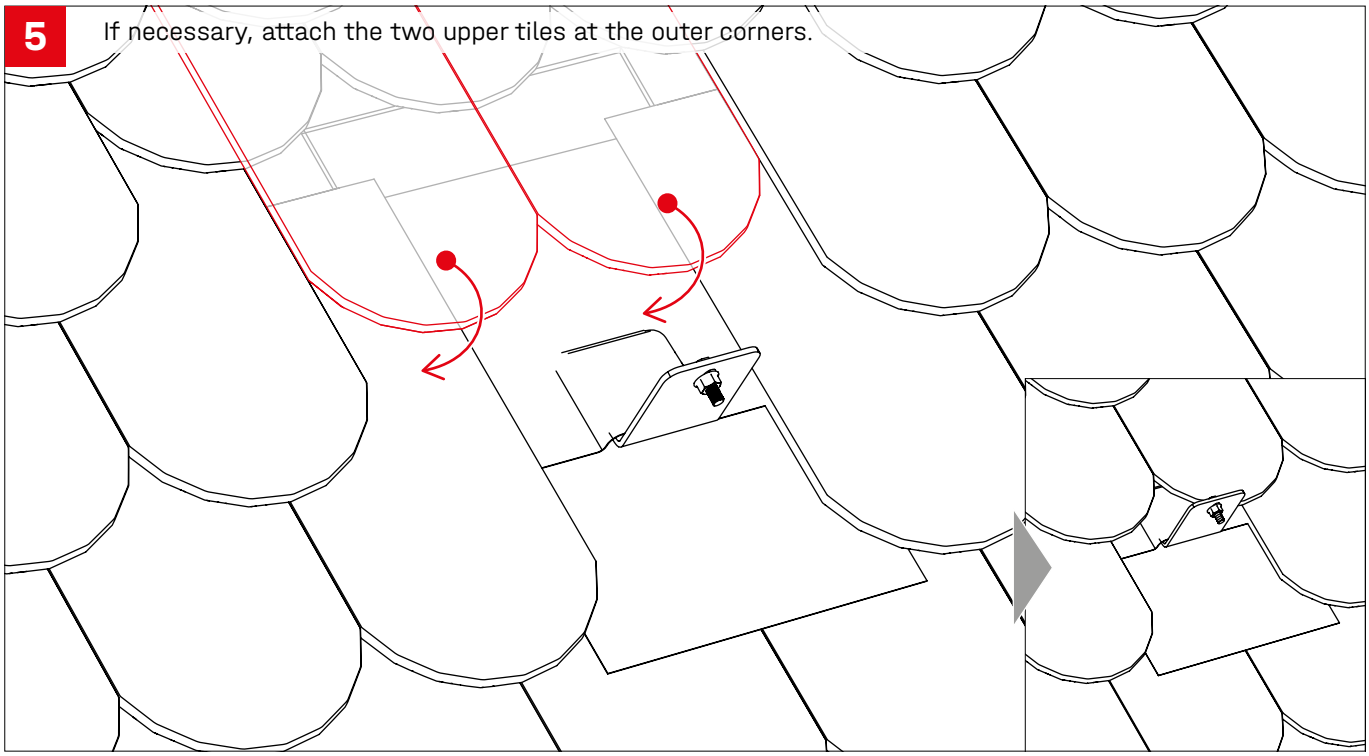
5
If necessary, attach the two upper tiles at the outer corners.

Portrait Crown covering Step 1 - 5

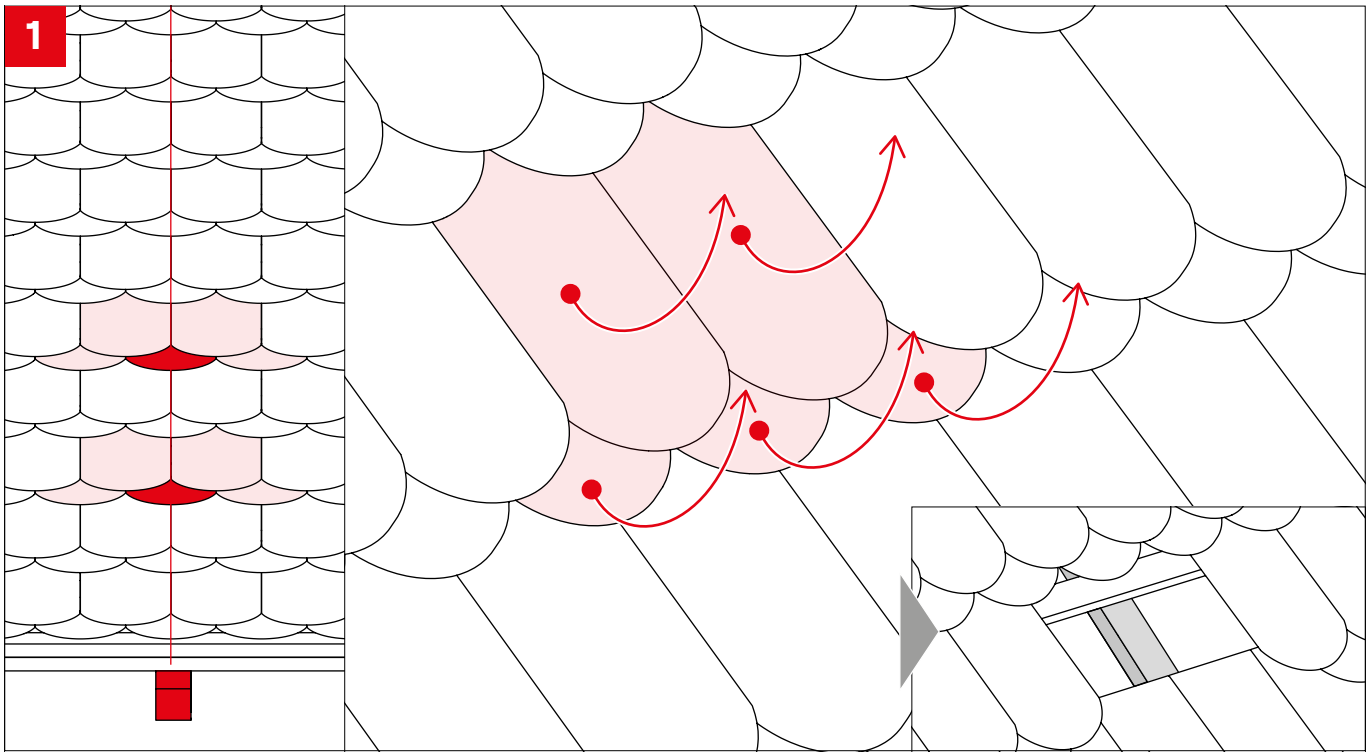

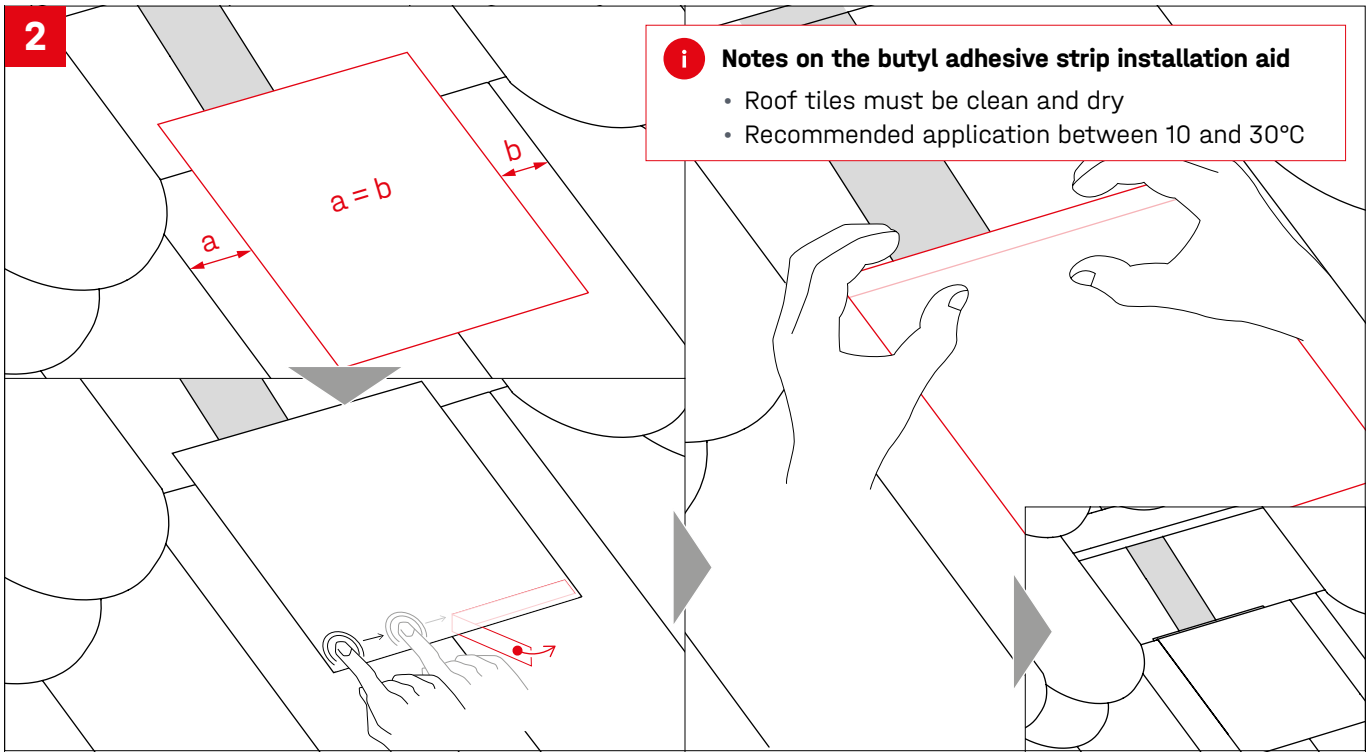

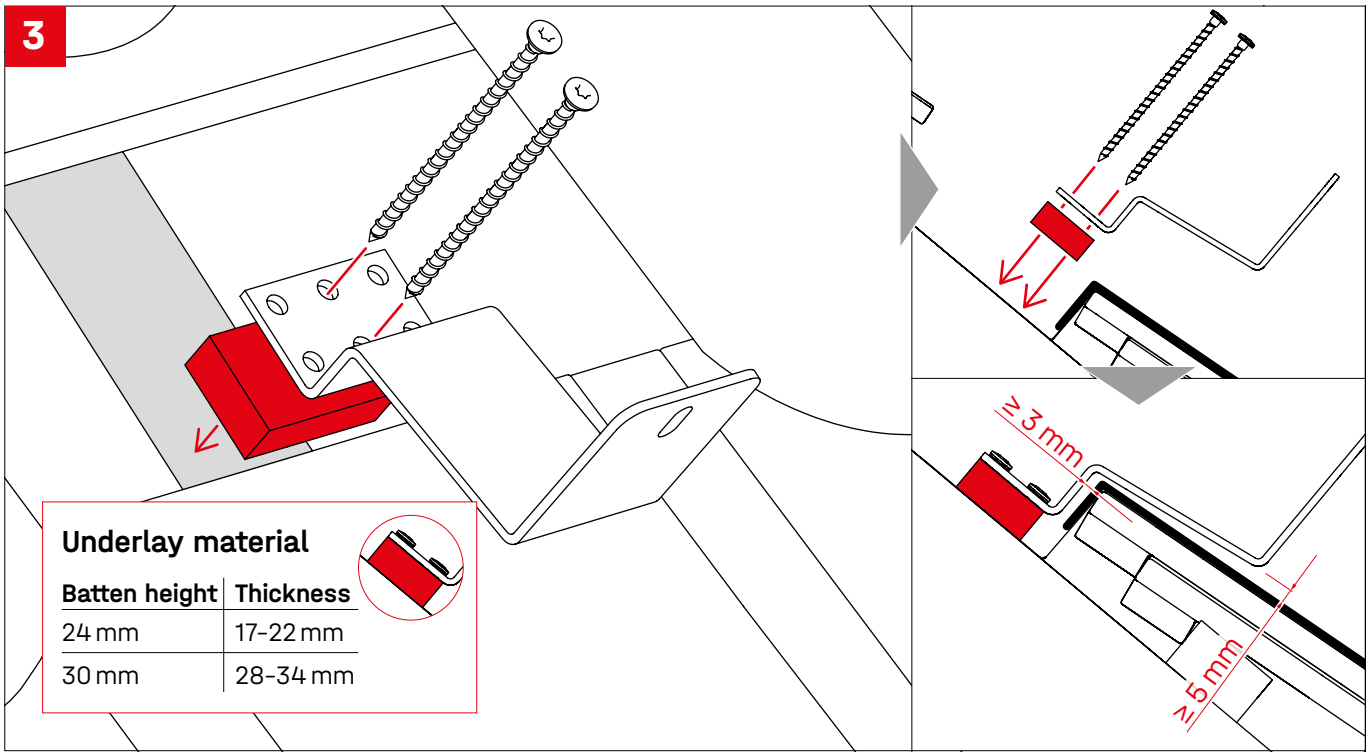

Underlay material

Batten height	Thickness
24 mm	17–22 mm
30 mm	28–34 mm

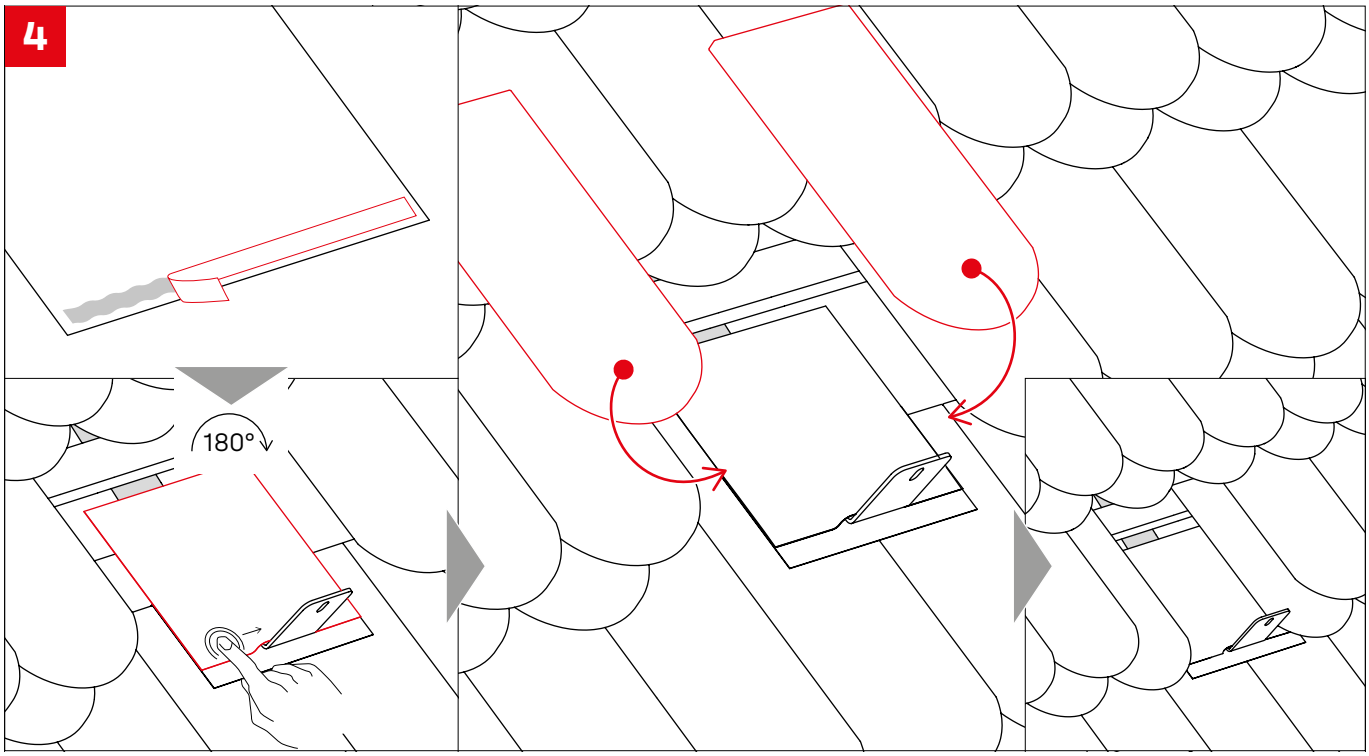

Option 1

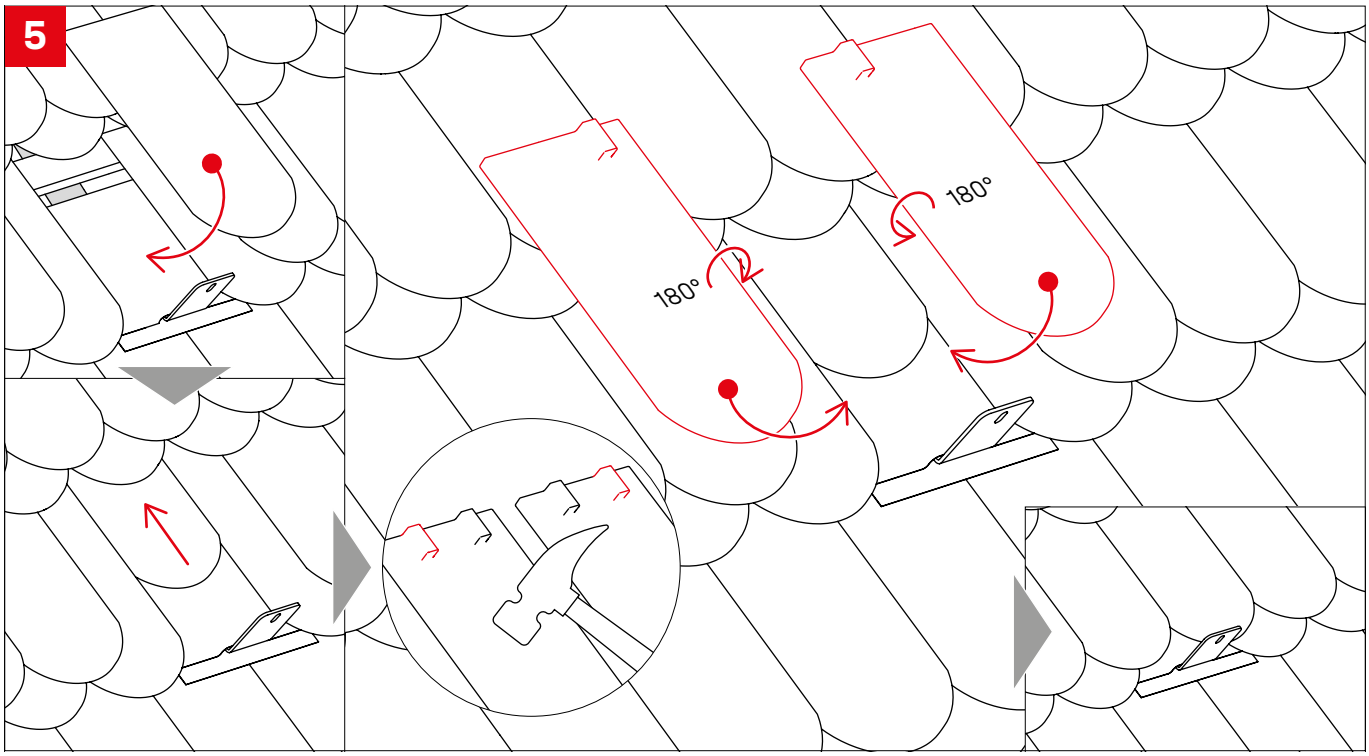

Option 2

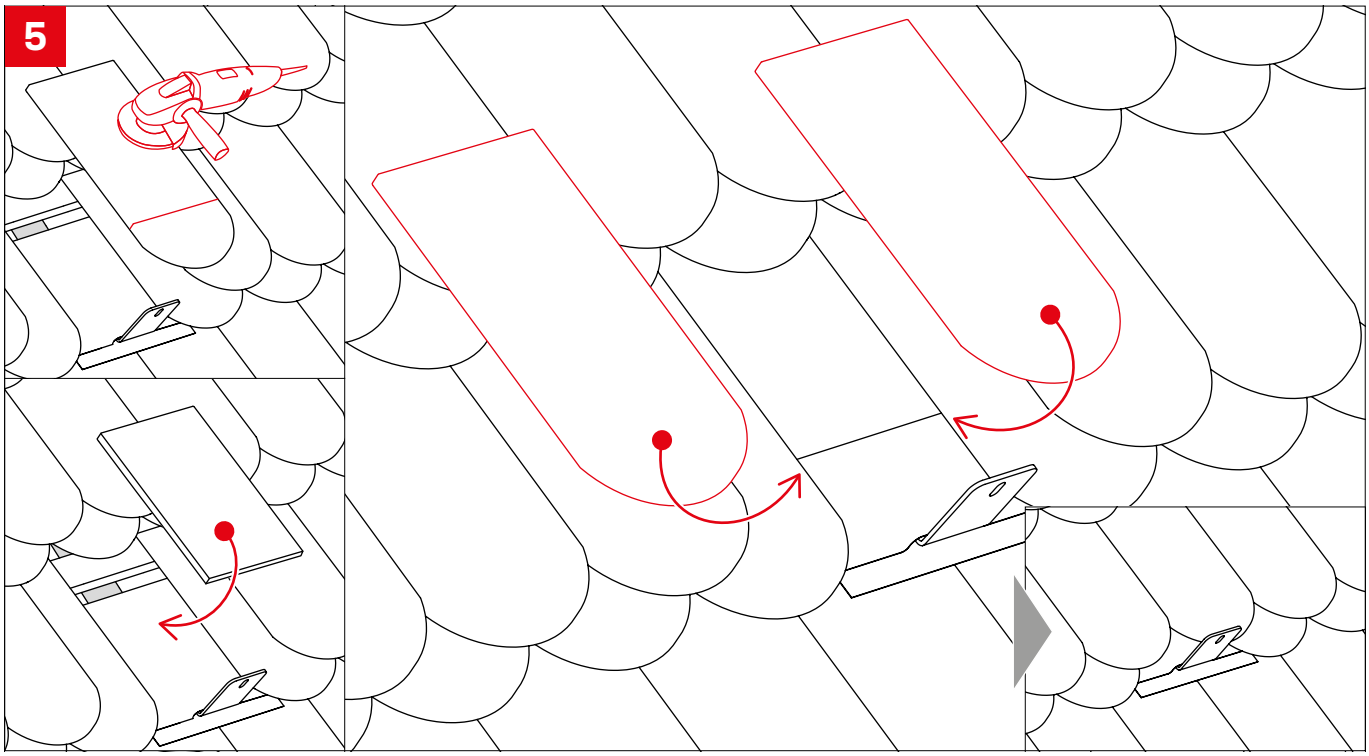

Portrait step 6 - 10

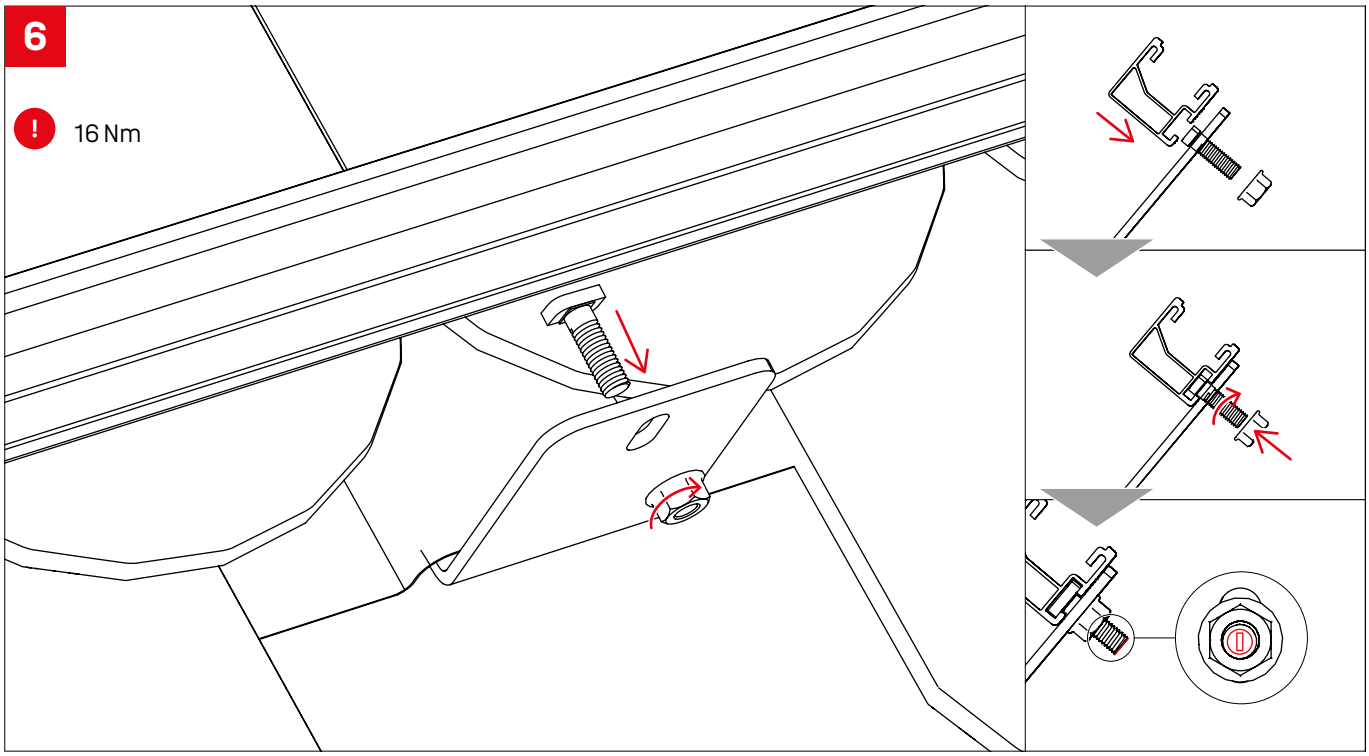

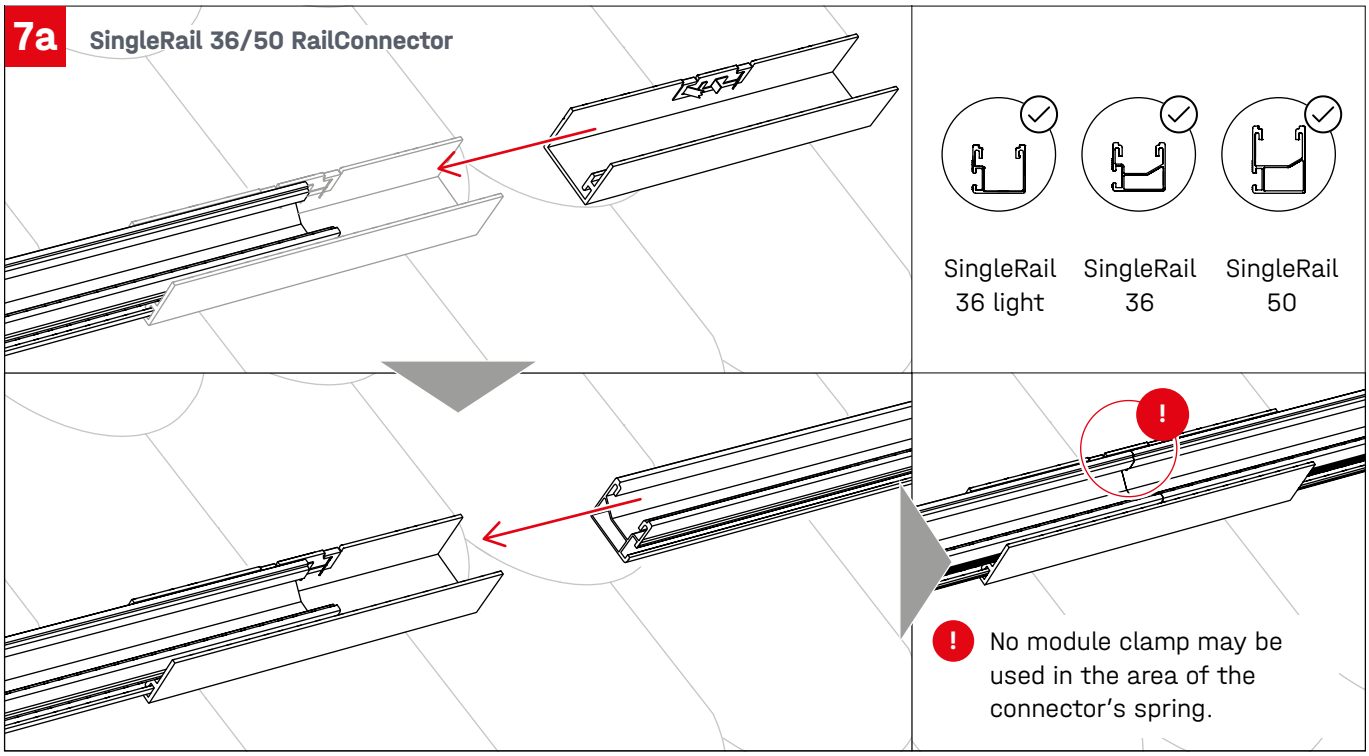

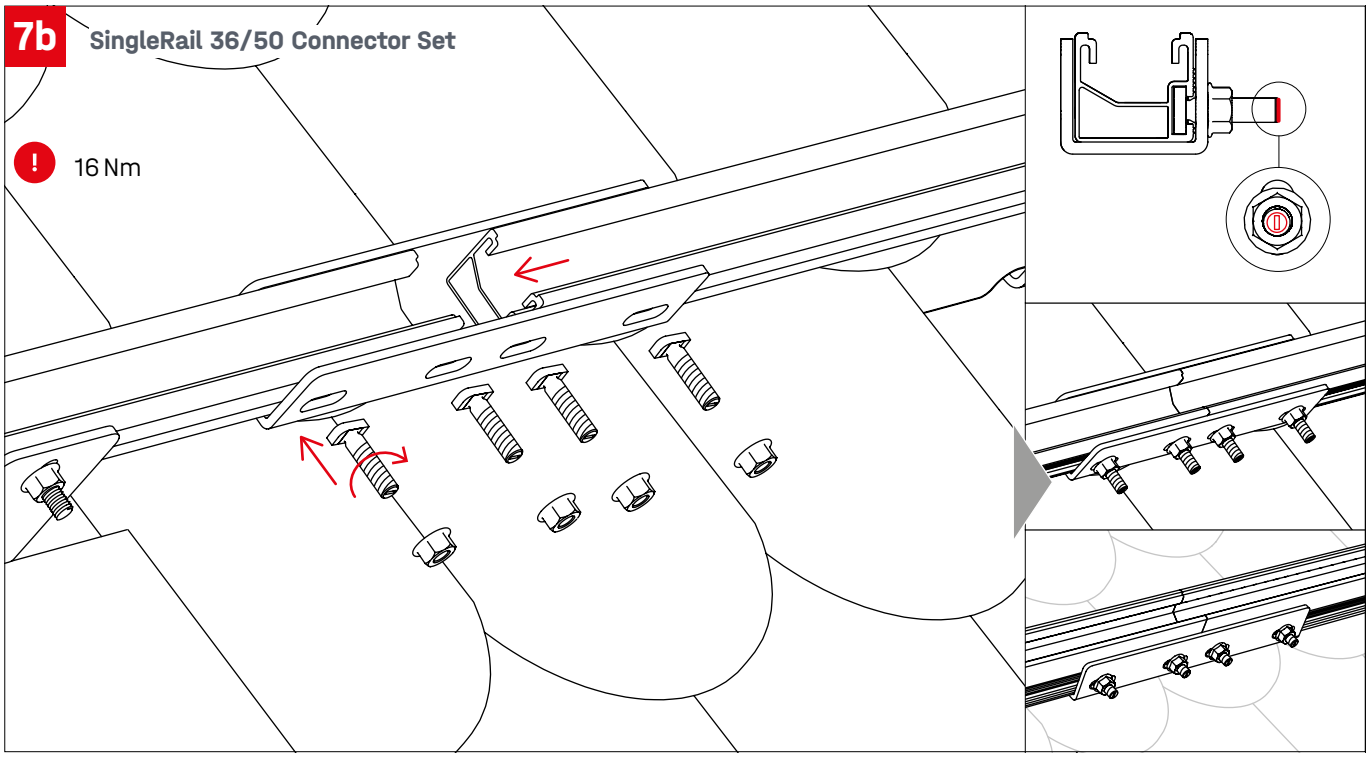
7b
SingleRail 36/50 Connector Set
16 Nm

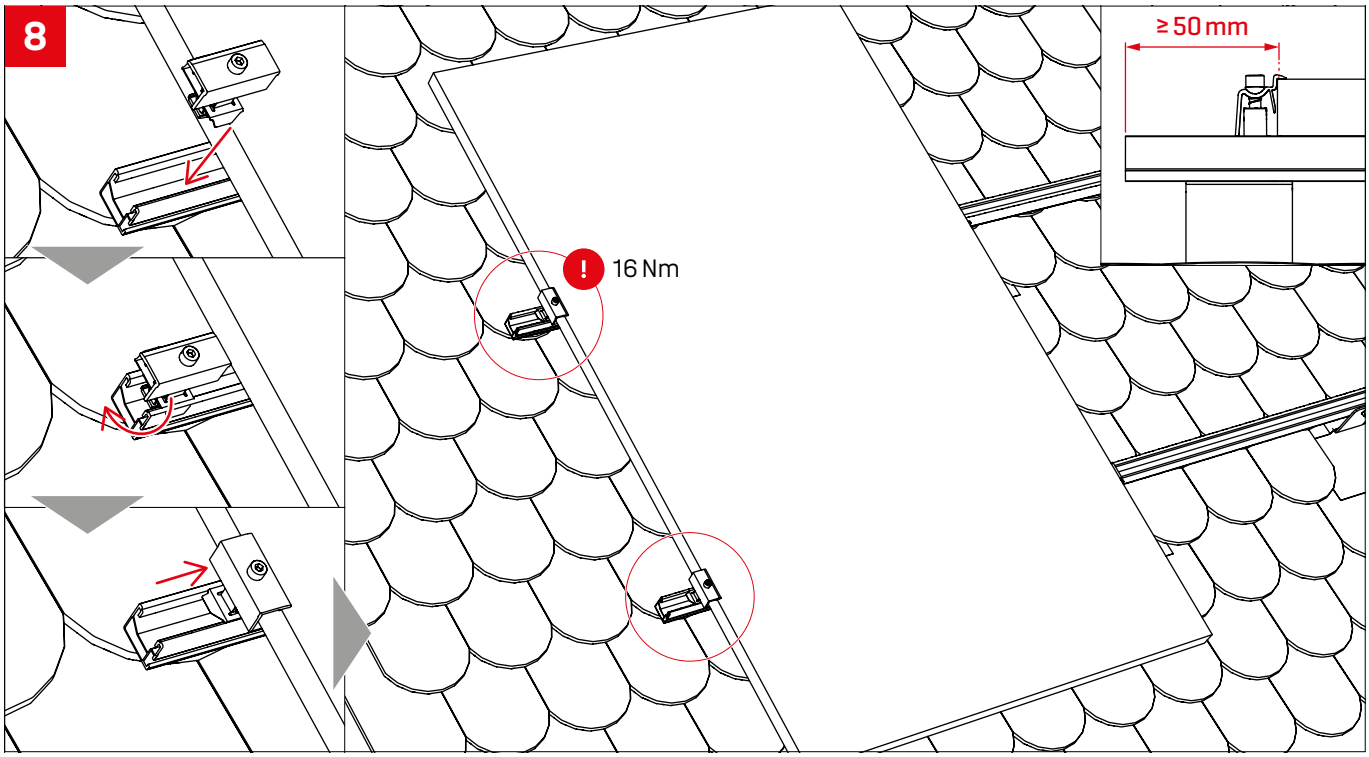
8
16 Nm
≥ 50 mm

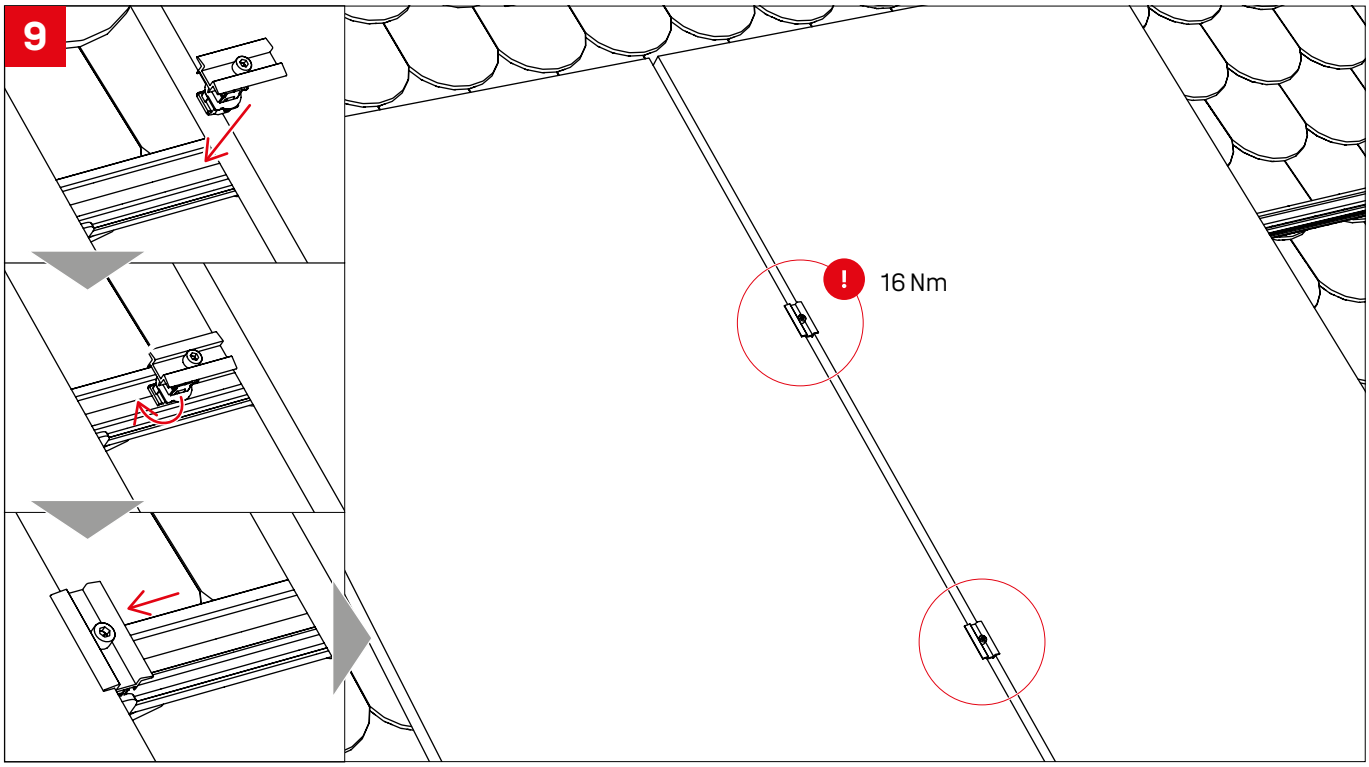

Optional - TerraGrif K2MI

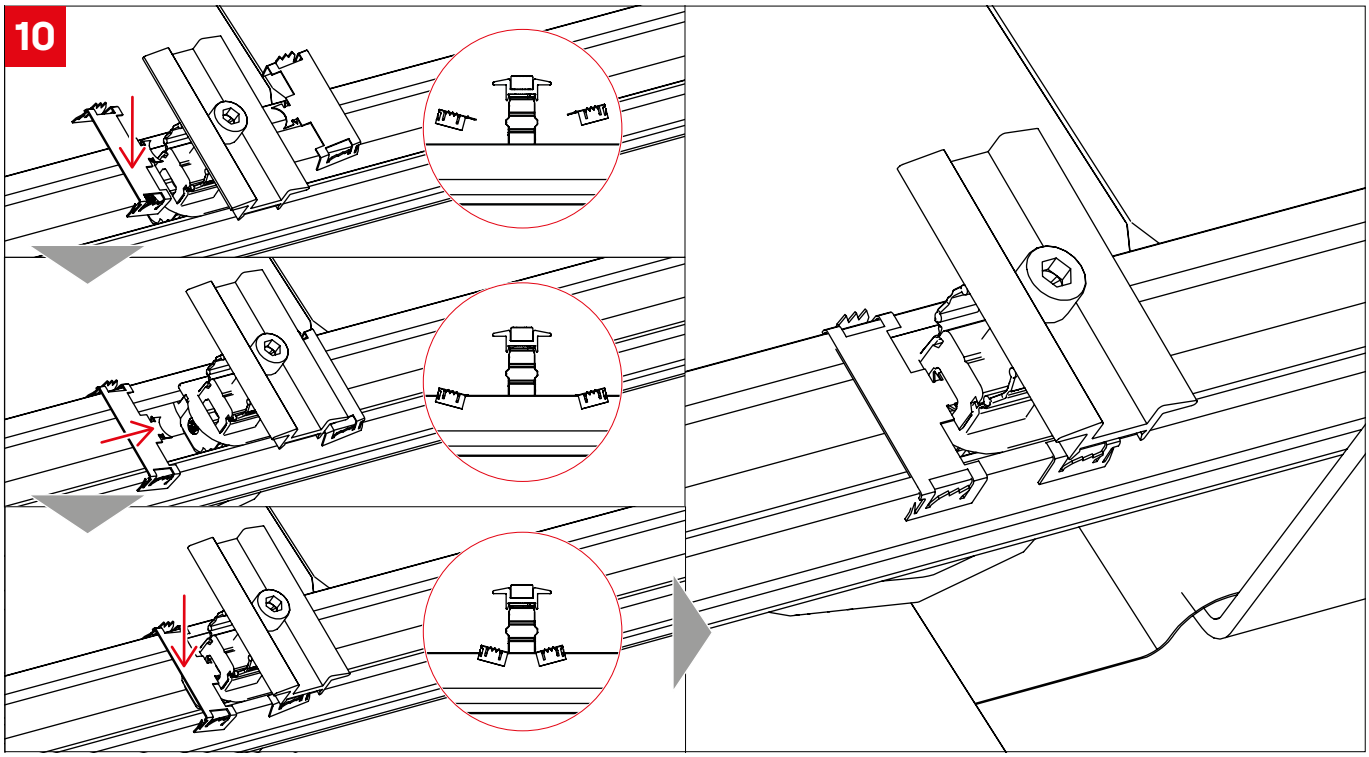

Assembly

Landscape

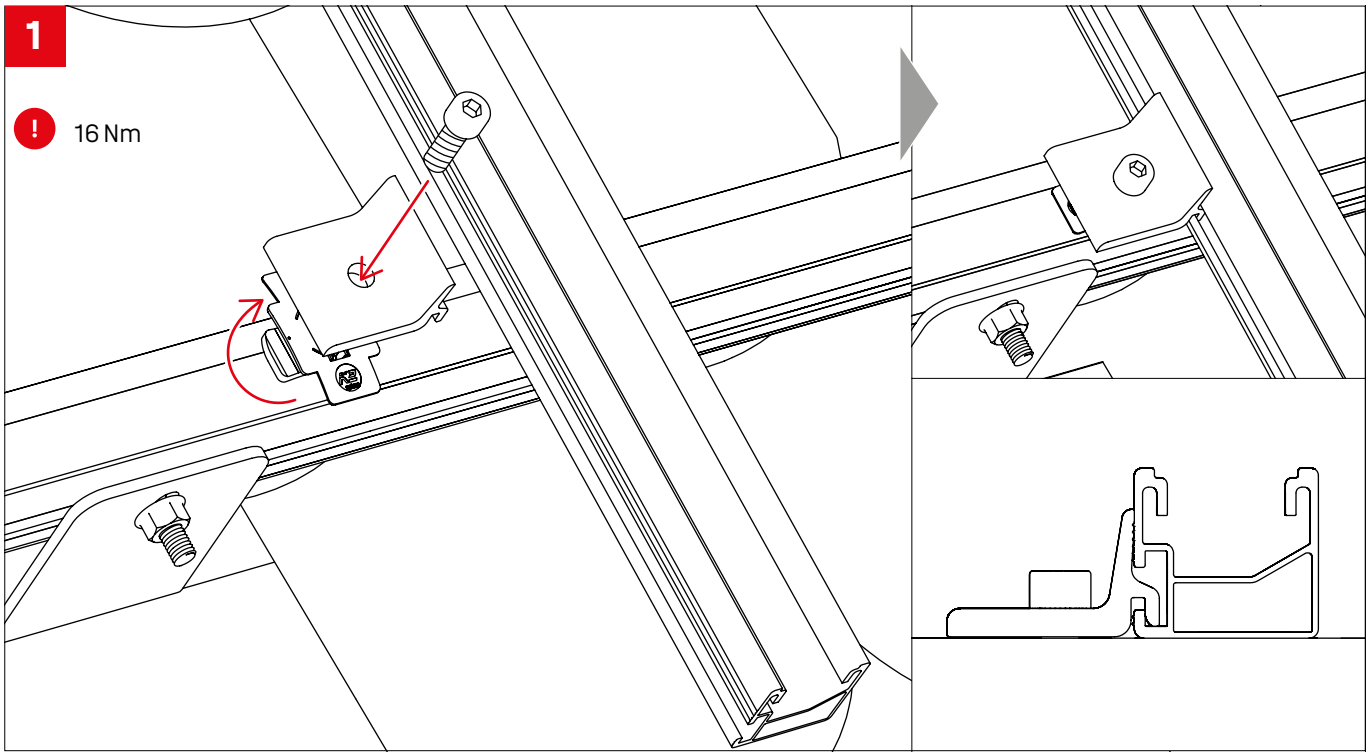

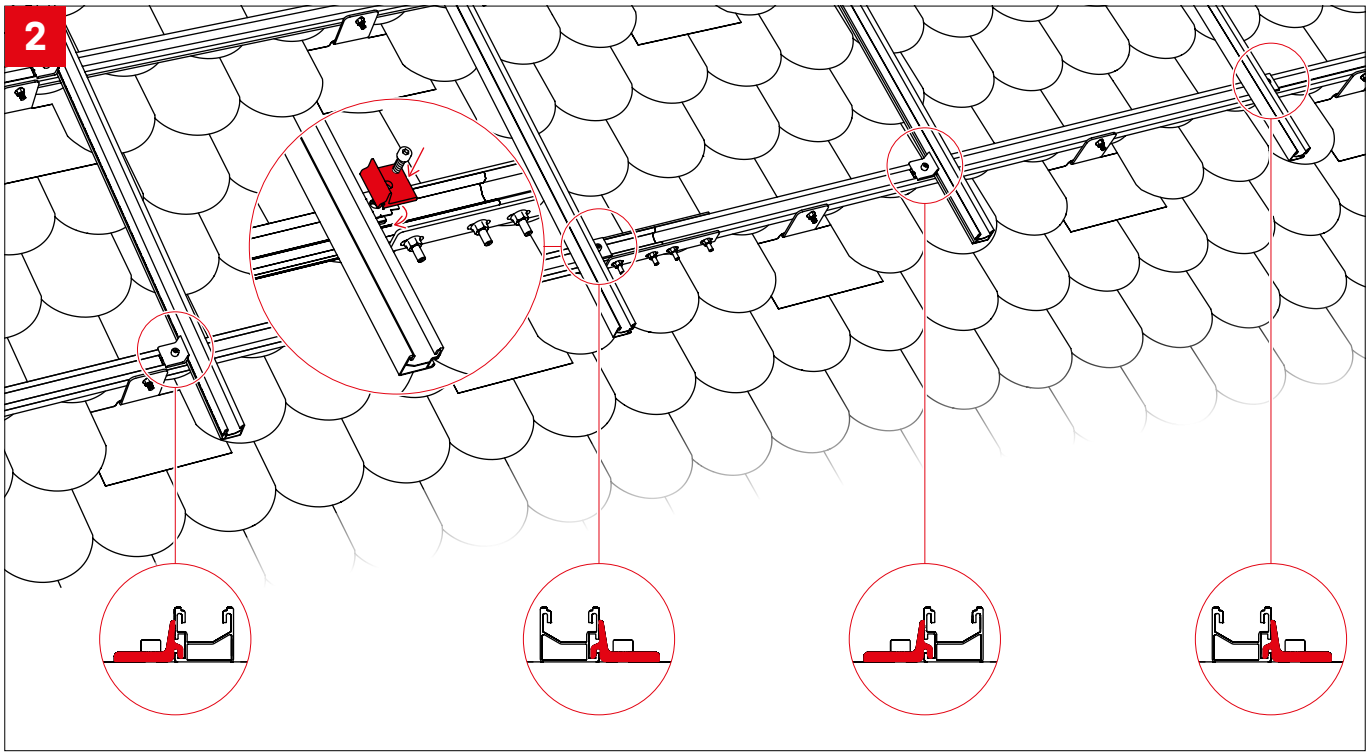

3a SingleRail 36/50 RailConnector

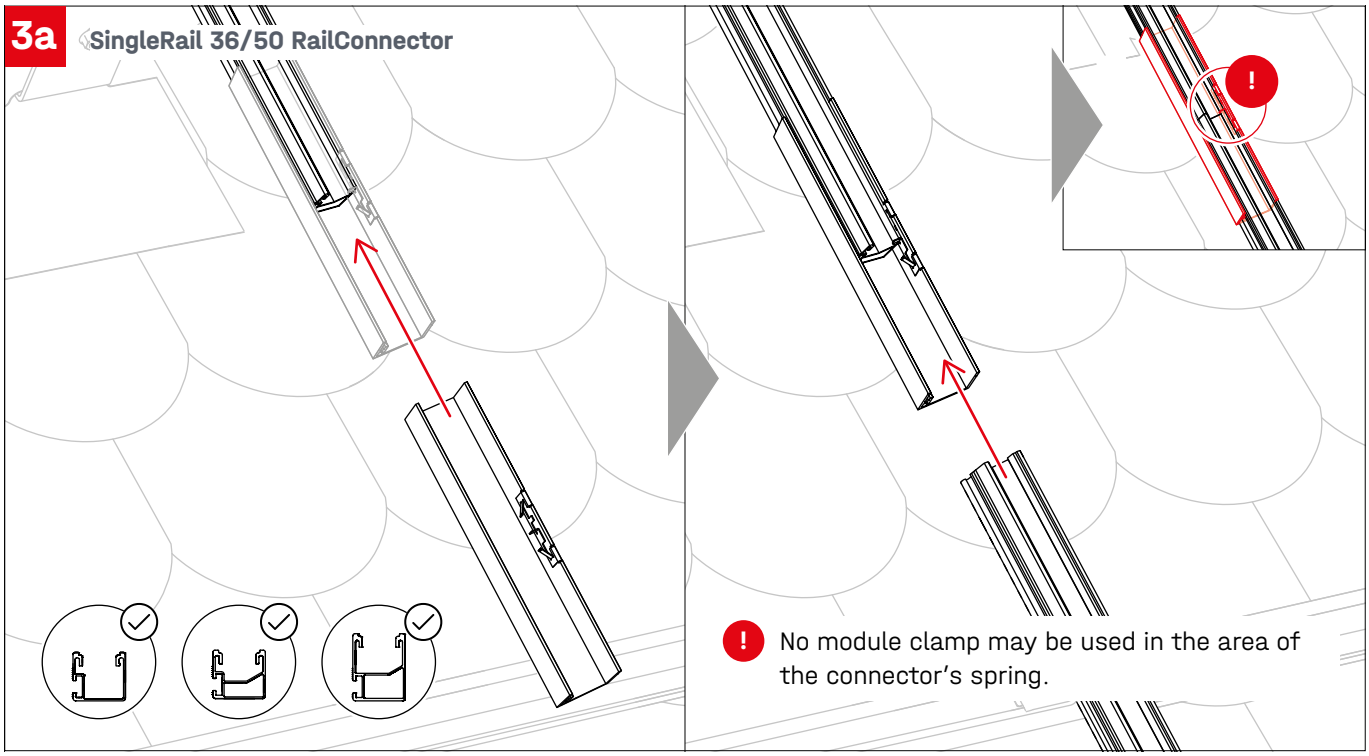

3b SingleRail 36/50 Connector Set

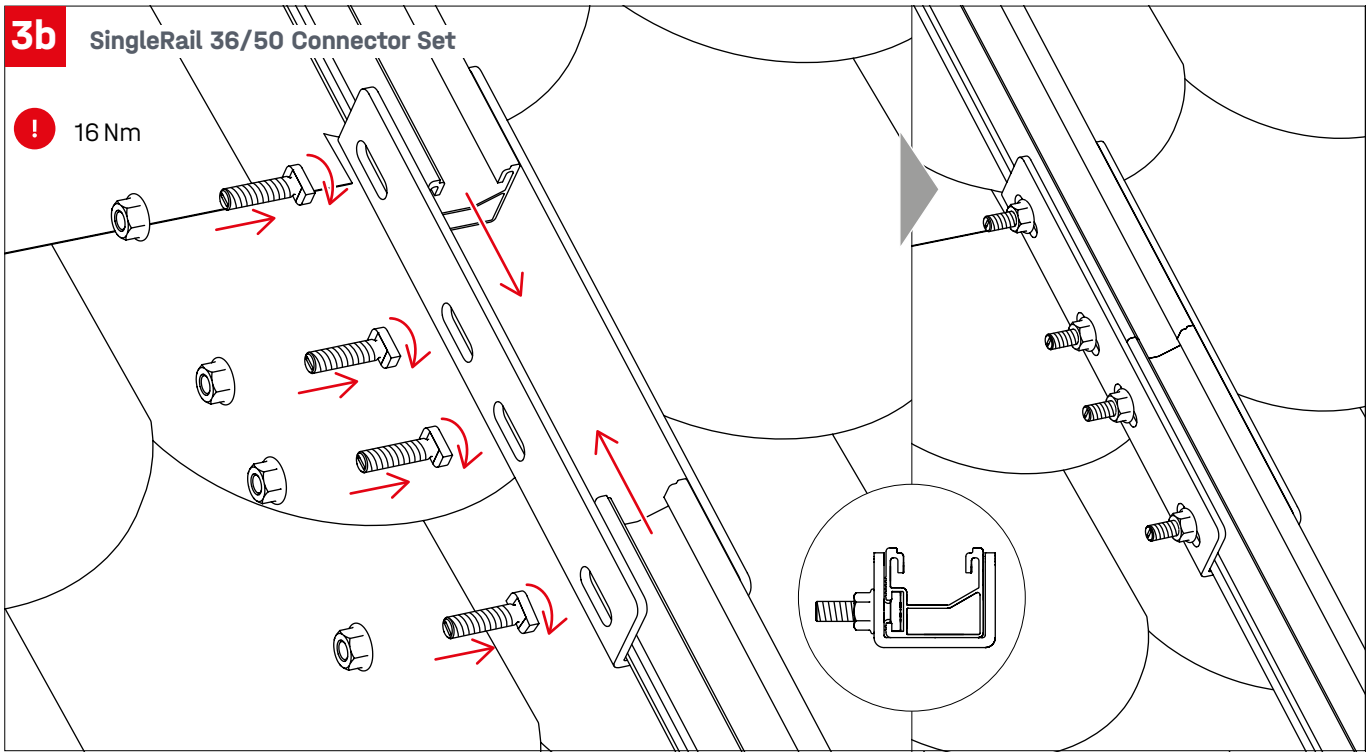

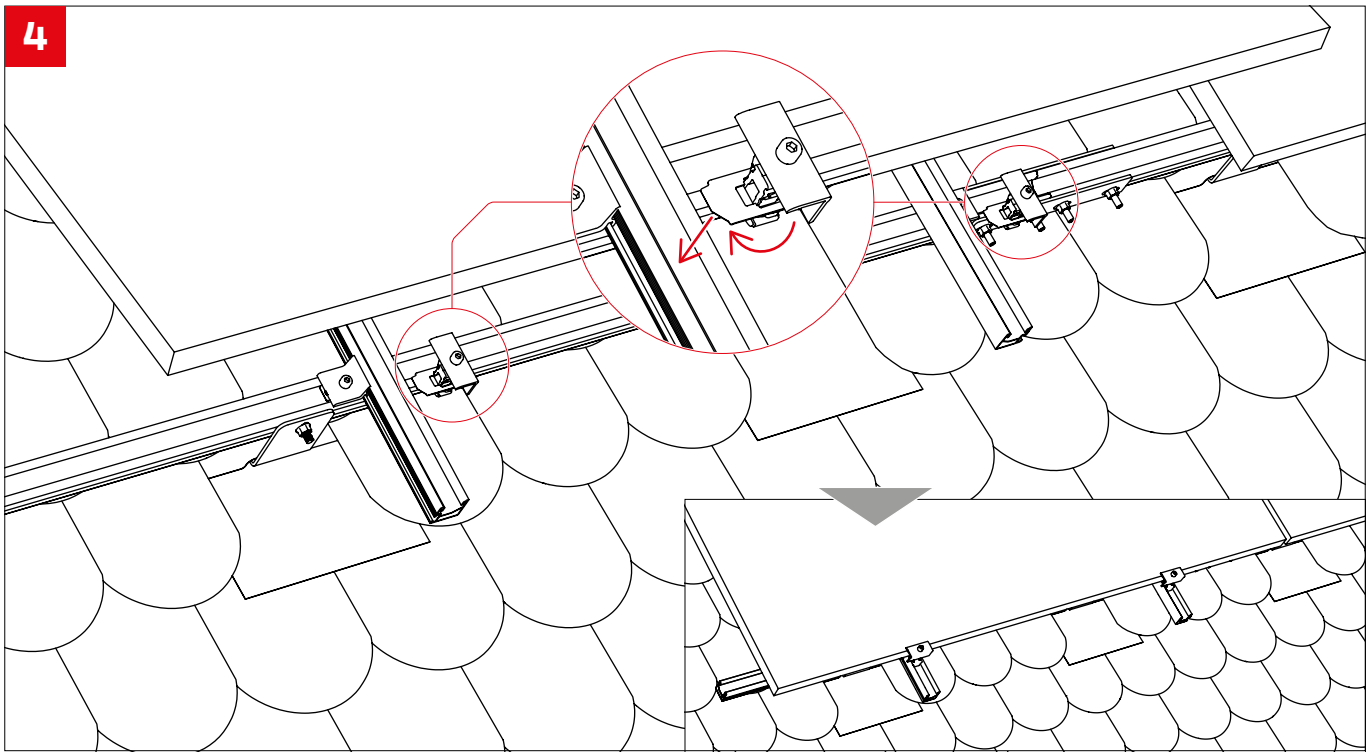
4

Optional

BlackCover

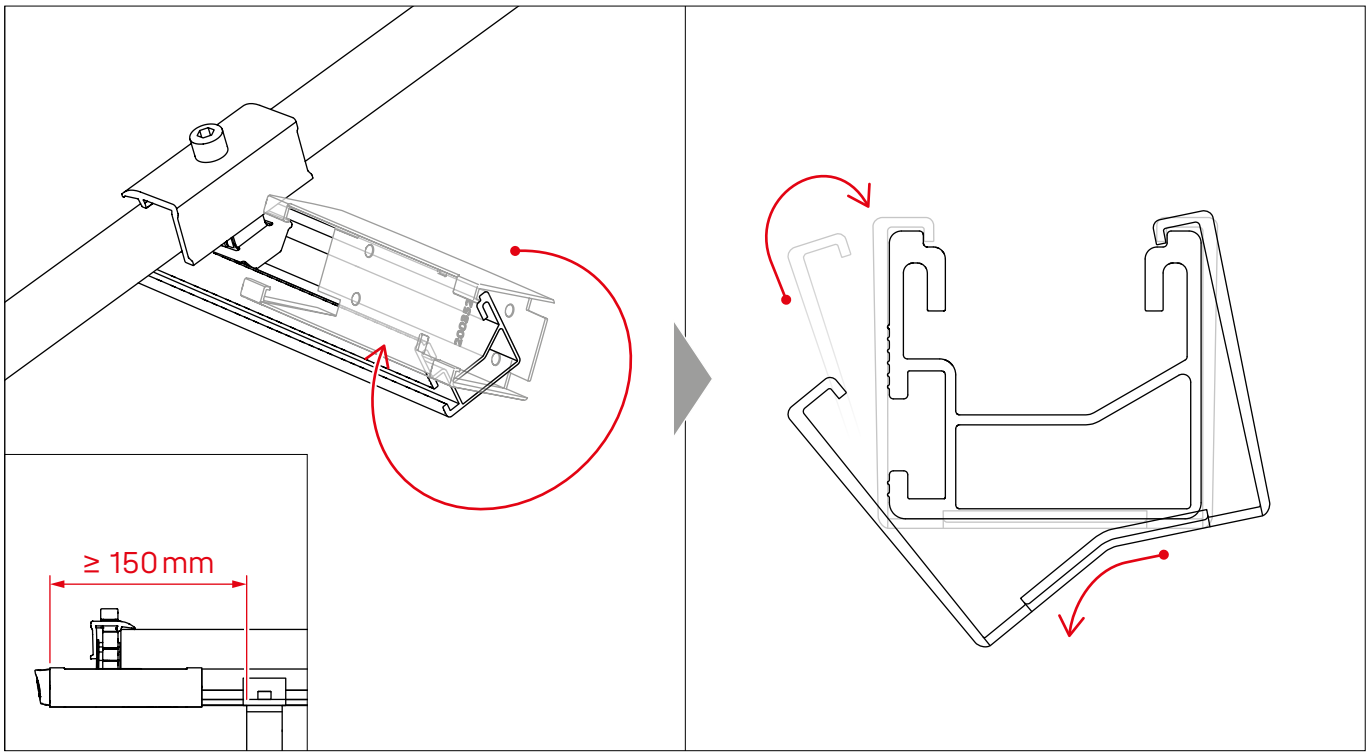

EndCap

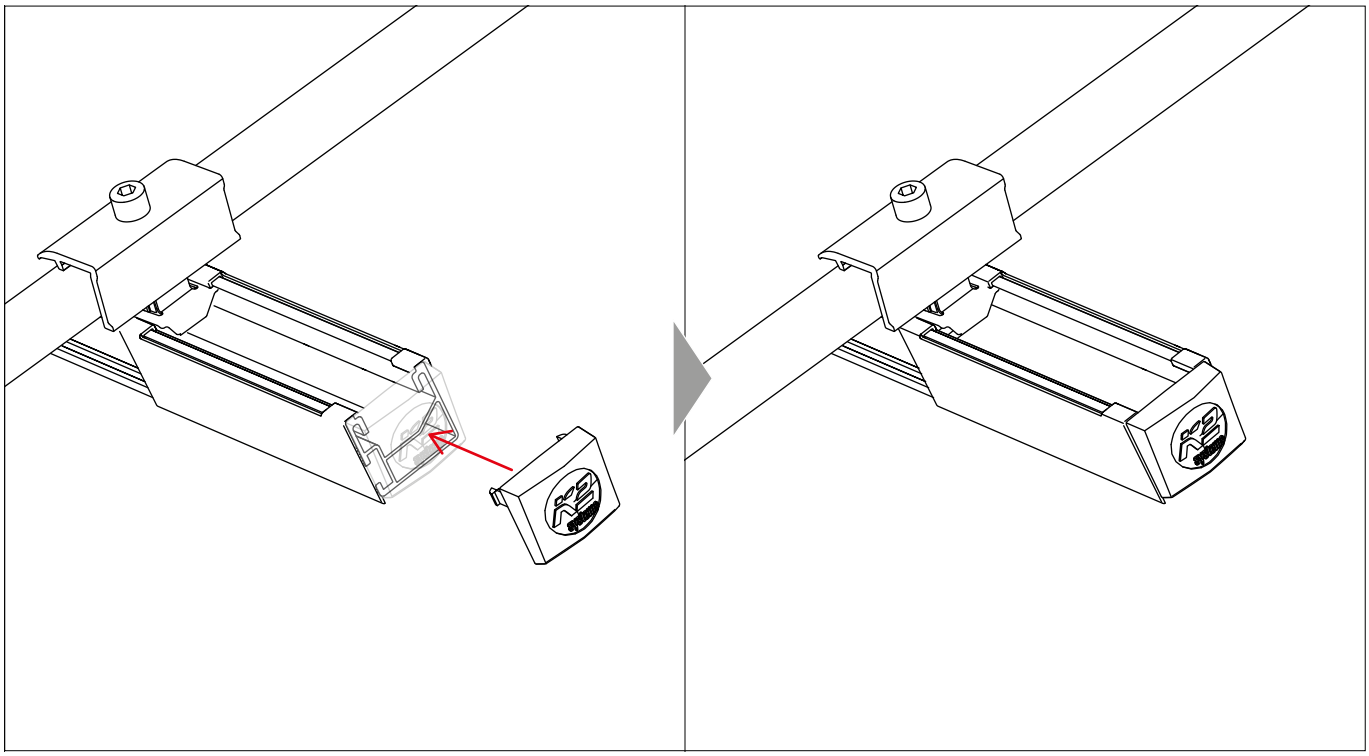

Notes

Connecting Strength

Thank you for choosing a K2 mounting system.

Mounting systems from K2 Systems are quick and easy to install. We hope these instructions have helped. Please contact us with any questions or suggestions for improvement. Our contact data:

- **k2-systems.com/en/contact**
- **Service Hotline: +49 (0)7159 42059-0**

Our General Terms of Business apply. Please refer:
k2-systems.com

K2 Systems GmbH
Haldenstraße 1 · 71272 Renningen · Germany
+49 (0) 7159 - 42059 - 0 · info@k2-systems.com · k2-systems.com

SingleHook Flat Tile Assembly EN V2 | 0726 · Subject to change
Product illustrations are exemplary and may differ from the original.