Connecting Strength

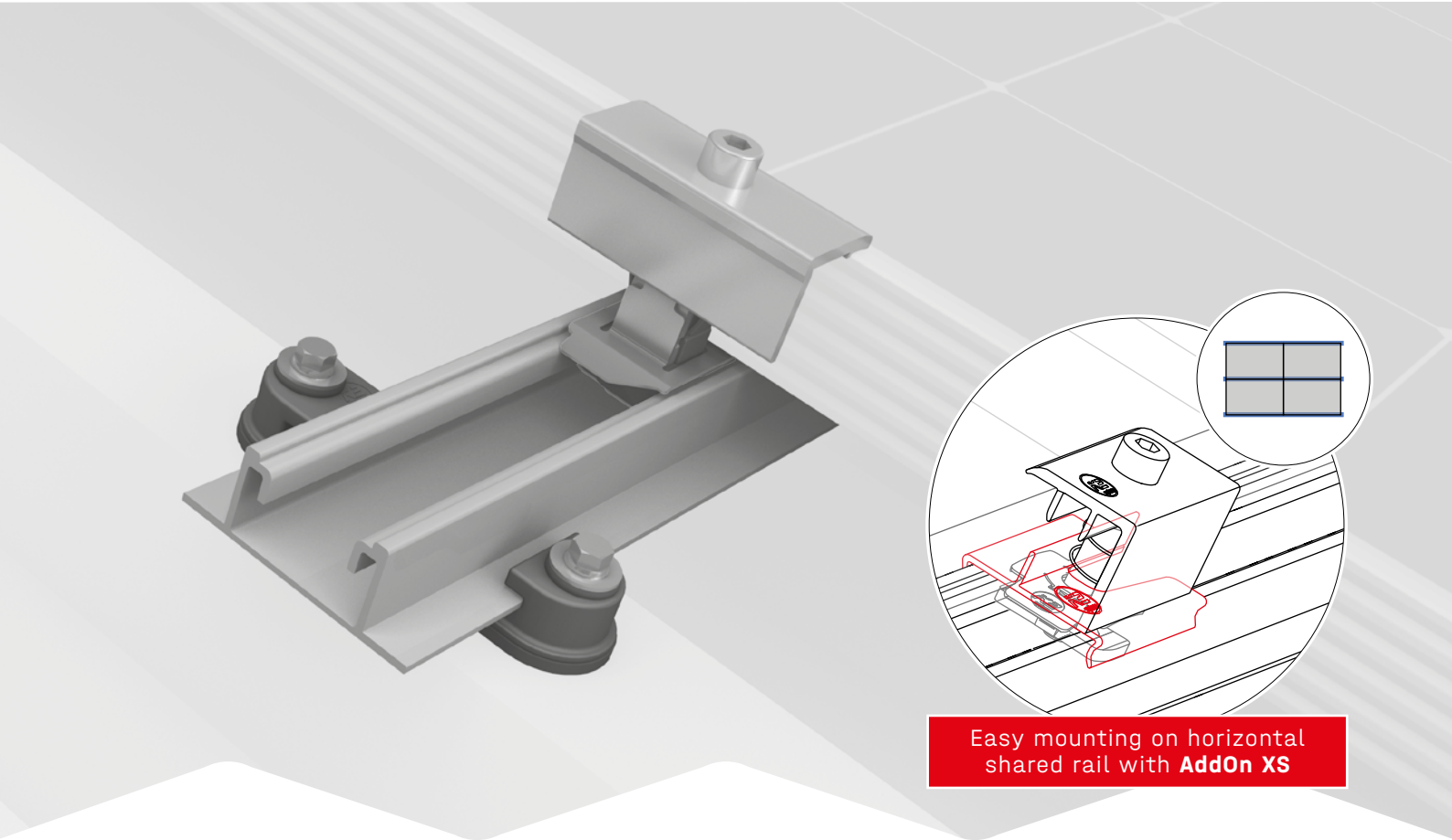

Assembly instructions

K2 BasicRail System

Content

- **Tools overview** **3**
- **General safety information** **4**
- **The following guidelines apply** **5**
  - · Planning with K2 Base 5
  - · Roof requirements 5
  - · Structural requirements 5
  - · Important mounting instructions 5
- **Components** **6**
  - · Portrait assembly 6
  - · Landscape assembly with AddOn XS 8
  - · Landscape assembly with two layers of rails 9
- **Assembly** **10**
- **Alternative system assemblies** **17**
  - · Thermal cut space saving method 17
  - · Landscape assembly with two layers of rails 17
  - · Landscape assembly with AddOn XS 18
- **Optional installation steps** **21**
  - · Roof-parallel elevation with RailUp 21
  - · TerraGrif QL for K2 Clamp 22
  - · TerraGrif K2SZ for XS Clamp 22
- **Notes** **23**

Quality tested - multiple certifications

K2 Systems stands for secure connections, highest quality and precision. Our customers and business partners have known that for a long time. Independent institutes have tested, confirmed and certified our capabilities and components.
Please find our quality and product certificates under:
k2-systems.com/en/technical-information

Übereinstimmungszeichen (Ü-Zeichen)

The BasicRail system BasicRail/BasicClip has the German general building authority technical approval Z-14.4-603.

Tools overview

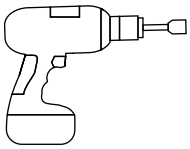

5/6 mm 8 mm 25

6 - 30 Nm
(4.5 - 22.2 lb-ft)

5/6 mm

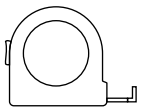

≥ 3.0 m

≥ 6.0 m

Digital Toolbox

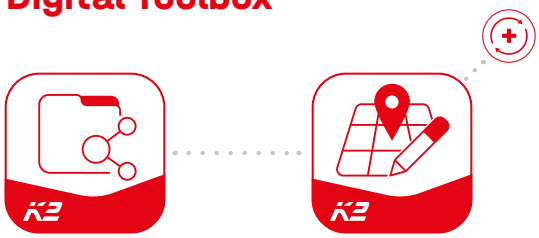

Do you already know our digital services? Use our K2 DocuApp now and record the first important data directly at the customer or project site. Simply transfer the data to our online planning software K2 Base. Here you can plan your project easily, safely and quickly. You receive a detailed project report with assembly plan and static report.
The K2+ interface enables seamless project data transfer to the planning tools of well-known inverter manufacturers or yield planning tools.

Get started and register now:

docuapp.k2-systems.com

base.k2-systems.com

General safety information

Please note that our general mounting instructions must be followed at all times and can be viewed online at k2-systems.com

- The equipment may only be installed and operated by qualified and adequately trained installers.
- Prior to installation, ensure that the product complies with on-site static loading requirements.
  For roof-mounted systems, the roof load-bearing capacity must always be checked.
- National and local building regulations and environmental requirements must be adhered to.
- Compliance with health and safety regulations, accident prevention guidelines and applicable standards is required.
  - Protective equipment such as safety helmet, boots and gloves must be worn.
  - Roofing works must be in accordance with roofing regulations utilising fall protection safeguards when eaves height exceeds 3 m.
  - At least two people must be present for the duration of the installation work in order to provide rapid assistance in the event of an emergency.
- K2 mounting systems are continuously developed and improved and the installation process may thereby change at any time. Prior to installation consult our website at k2-systems.com/en/technical-information for up-to-date instructions.
  We can send you the latest version on request.
- The assembly instructions of the module manufacturer must be adhered to.
- Equipotential bonding/grounding/earthing between individual parts is to be performed according to country specific standards, as well as national laws and regulations.
- At least one copy of the assembly instructions should be available on site throughout the duration of the installation.
- Failure to adhere to our general safety and assembly instructions and not using all system components, K2 is not liable for any resulting defects or damages. We do not accept liability for any damage resulting in the use of competitor's parts. Warranty is excluded in such cases.
- German law shall apply excluding the UN Convention on CISG. Place of venue is Stuttgart. Our General Terms of Business apply.
- If all safety instructions are adhered to and the system is correctly installed, there is a product warranty entitlement of 12 years! We strongly recommend reviewing our terms of guarantee, which can be viewed at k2-systems.com/en/warranty-terms-and-conditions
  We will also send this information on request.
- Dismantling of the system is performed in reverse order to the assembly.
- K2 stainless steel components are available in different corrosion resistance classes. Each structure or component must be carefully checked for possible corrosion exposure.

The following guidelines apply

The BasicRail system can be used without further testing by K2 systems in the following standard conditions. The system is also suitable for higher requirements.
However, if a value exceeds the standard conditions, please contact K2 Systems.

Planning with K2 Base

We recommend our free online software K2 Base for the planning. In five steps, you can plan the right assembly system and get a construction recommendation, parts list and the structural analysis report. Simply register and start planning:
base.k2-systems.com

Roof requirements

- Sheet thickness: Aluminium ≥ 0.5 mm and steel ≥ 0.4 mm
- Minimum tensile strength for aluminium: 165 N/mm²; steel grade minimum S235
- Minimum 20 mm crest width
- Roof pitch inclination: 5 - 75°

Structural requirements

Sufficient holding force of the roof covering on the support or substructure

Important mounting instructions

- Earthing must be ensured (use lightning arrestor clamp if necessary).
- If the troughed sheet is to be fastened with calottes, please never bolt the BasicClips to the calottes! Instead of this, mount all BasicClips staggered in this sequence on the troughed sheet.
- Every fourth or quarter of all BasicClips is mounted rotated 180° to fix vertical position. Rotated BasicClips must not be placed at the end of the rail; see assembly step 5.
- For rail joints, BasicClips must be attached to the nearest high crest on both sides.
- Ensure a thermal separation after 9.60 m. The minimum distance between two rails should be 3 cm.
- Attention: Modules must never be clamped over the thermal expansion joint.
- A BasicLock per BasicRail up to 9.60 m in total length, is required (BasicRail connected via a rail connector counts as a BasicRail).
- When laying frameless modules vertically, always build in a stopper to prevent sliding-off for each module.
- MK2 insertion nuts and module clamps at rail joints must be avoided!
- A minimum mounting distance of 50 mm from the end of the rail / rail joint to the module frame.
- No pre-drilling required! Predrill only with overlapping sheets to reduce spacing.

Components

Portrait assembly

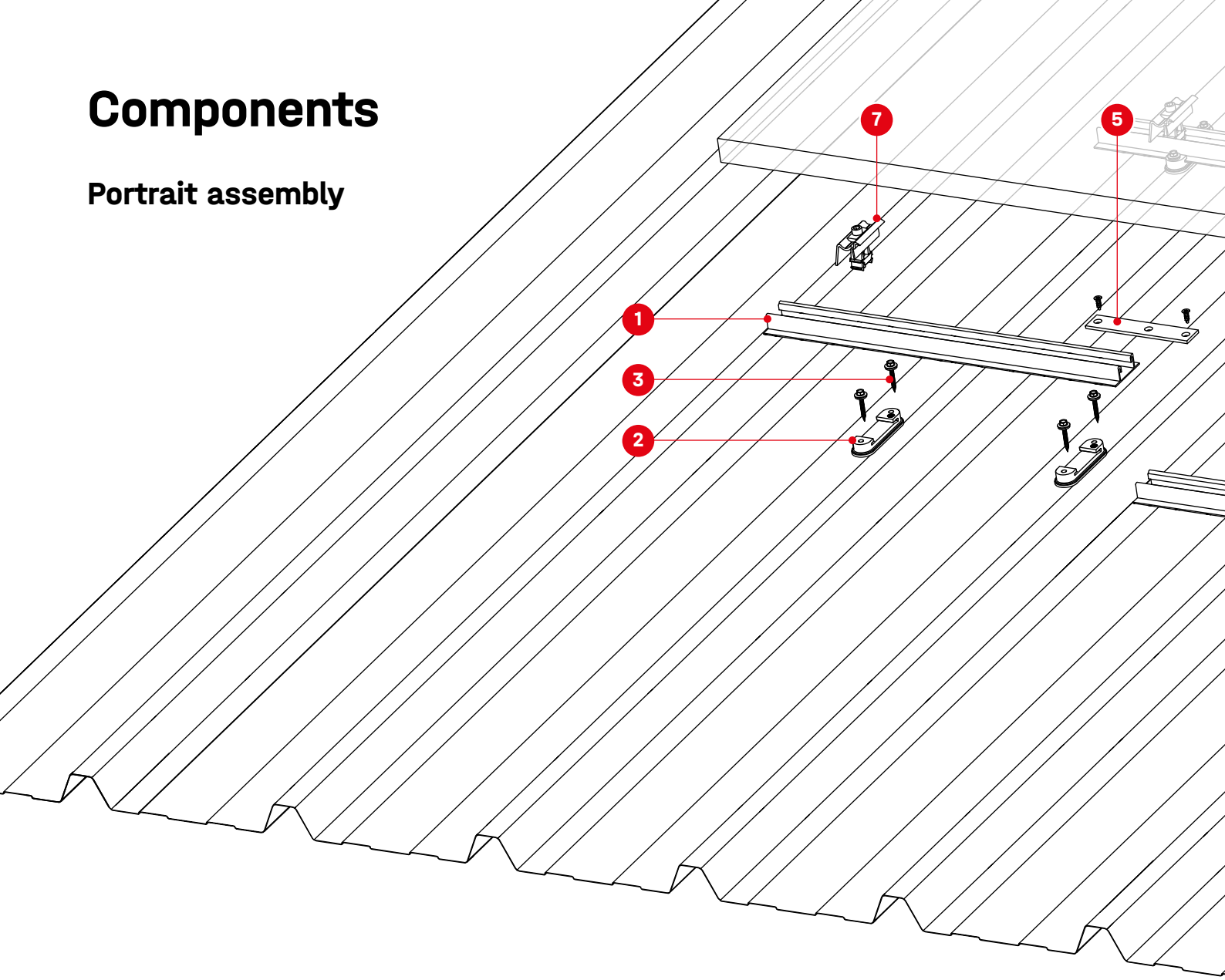

1 Item number
system-specific
BasicRail

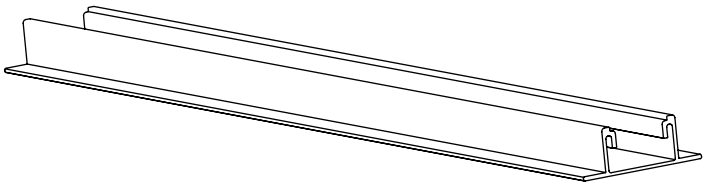

2 1001164
BasicClip

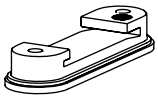

3 Item number system-specific
Self-tapping screws with sealing washer 6 × 38 mm

4 1003558
BasicLock Set

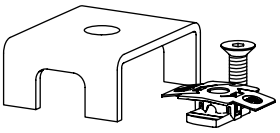

5 1003571
BasicConnector Set

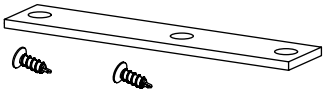

6 Item number system-specific
Module mid clamps

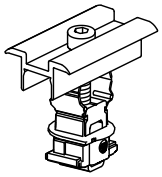

K2 Clamp MC
25 - 40

XS Clamp MC
30 / 33-35

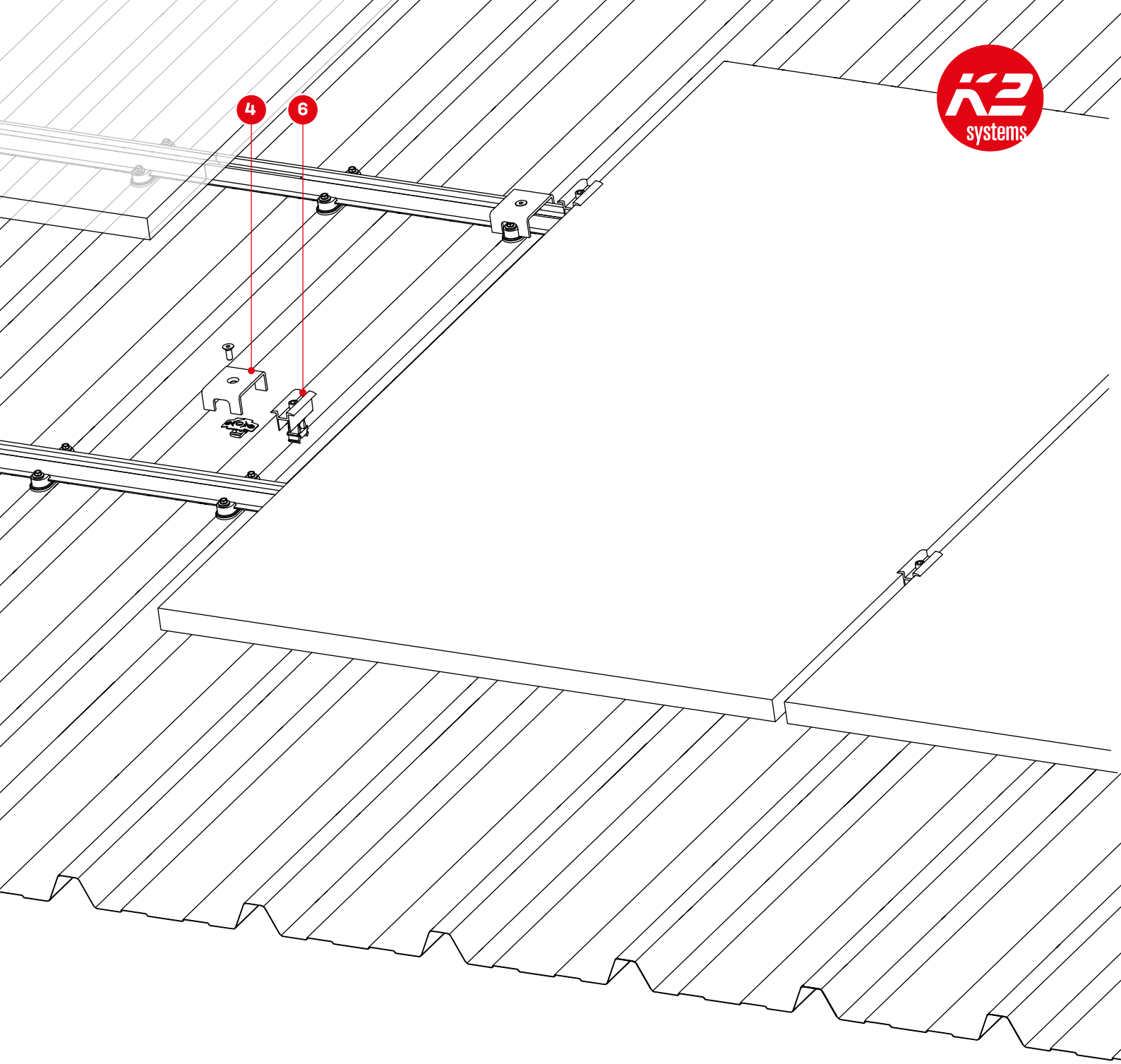

Optional components See page 21 + 22

7 Item number system-specific
Module end clamps

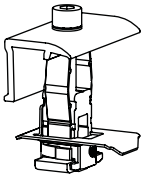

K2 Clamp EC
25 - 40

XS Clamp EC
30 / 33 / 35

2003191
RailUp Set

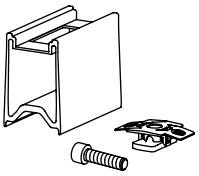

2001881
TerraGrif K2SZ

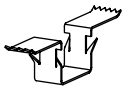

Components

Landscape assembly with AddOn XS

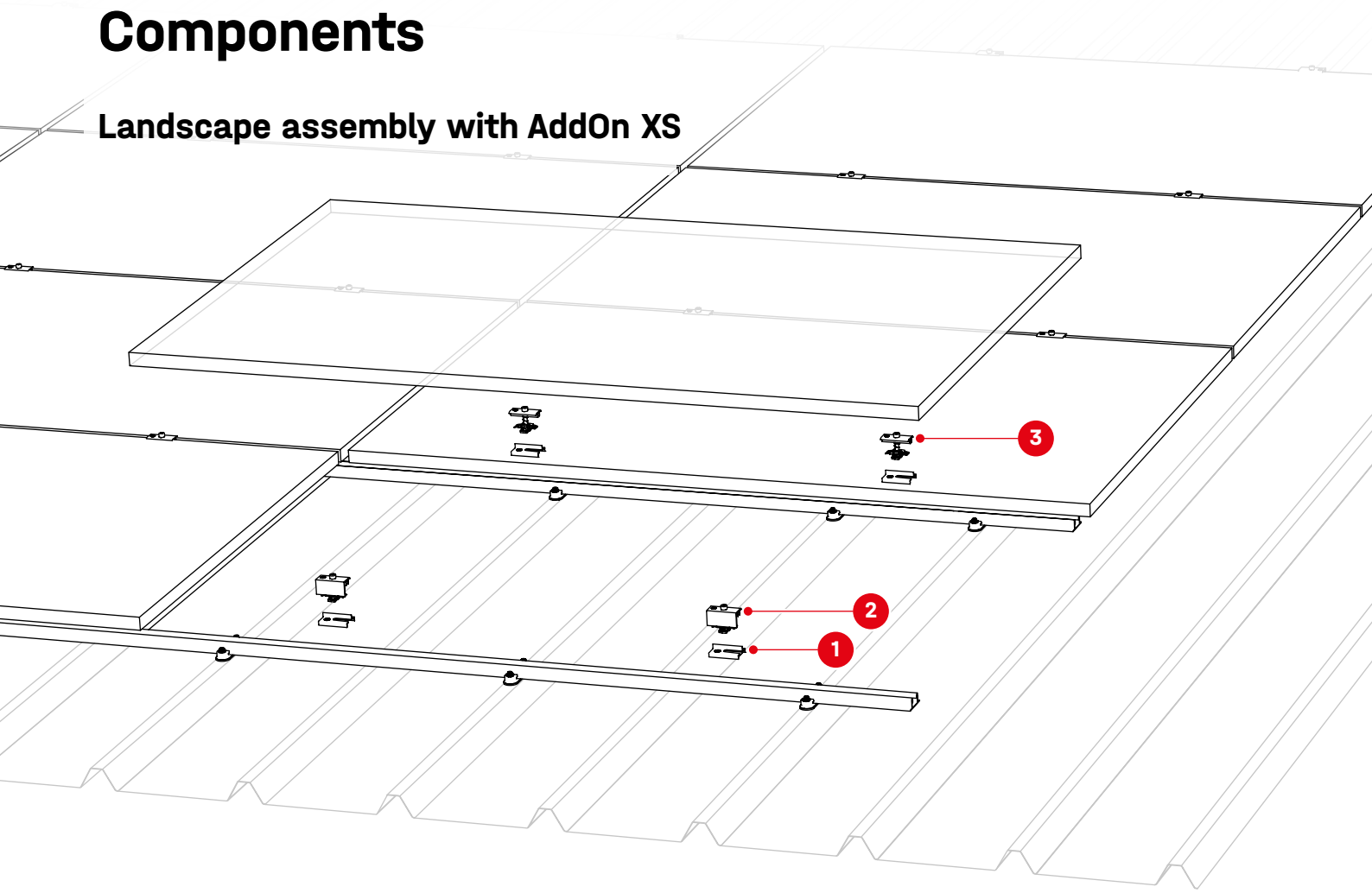

1 2004629
AddOn XS

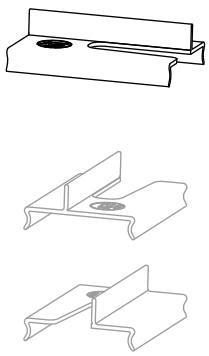

2 Module frame specific
XS End Clamp

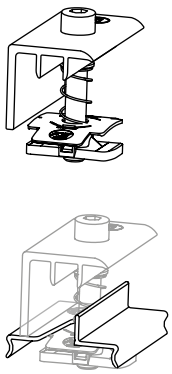

3 Module frame specific
XS Middle Clamp

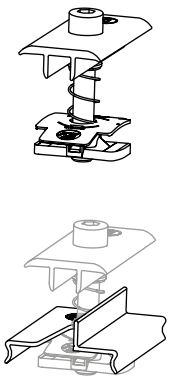

2004370 See page 18
FixStop 2.0

Landscape assembly with two layers of rails

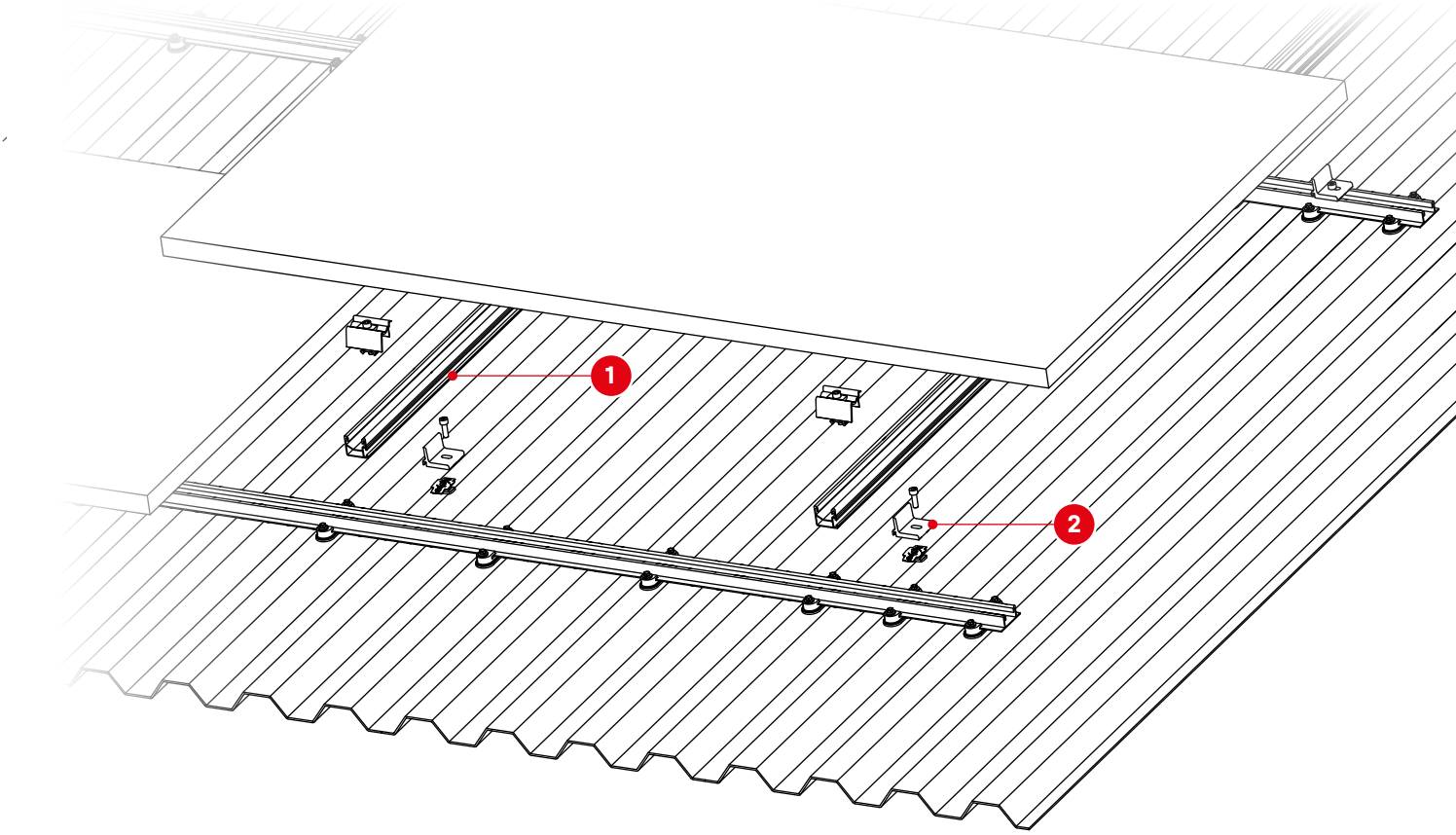

1 Item number system-specific
SingleRail

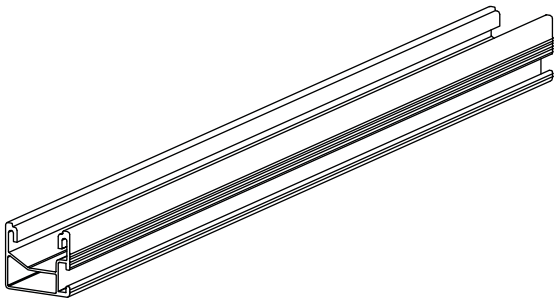

2 2003145
Climber Set

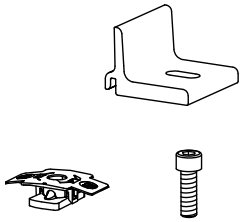

Assembly

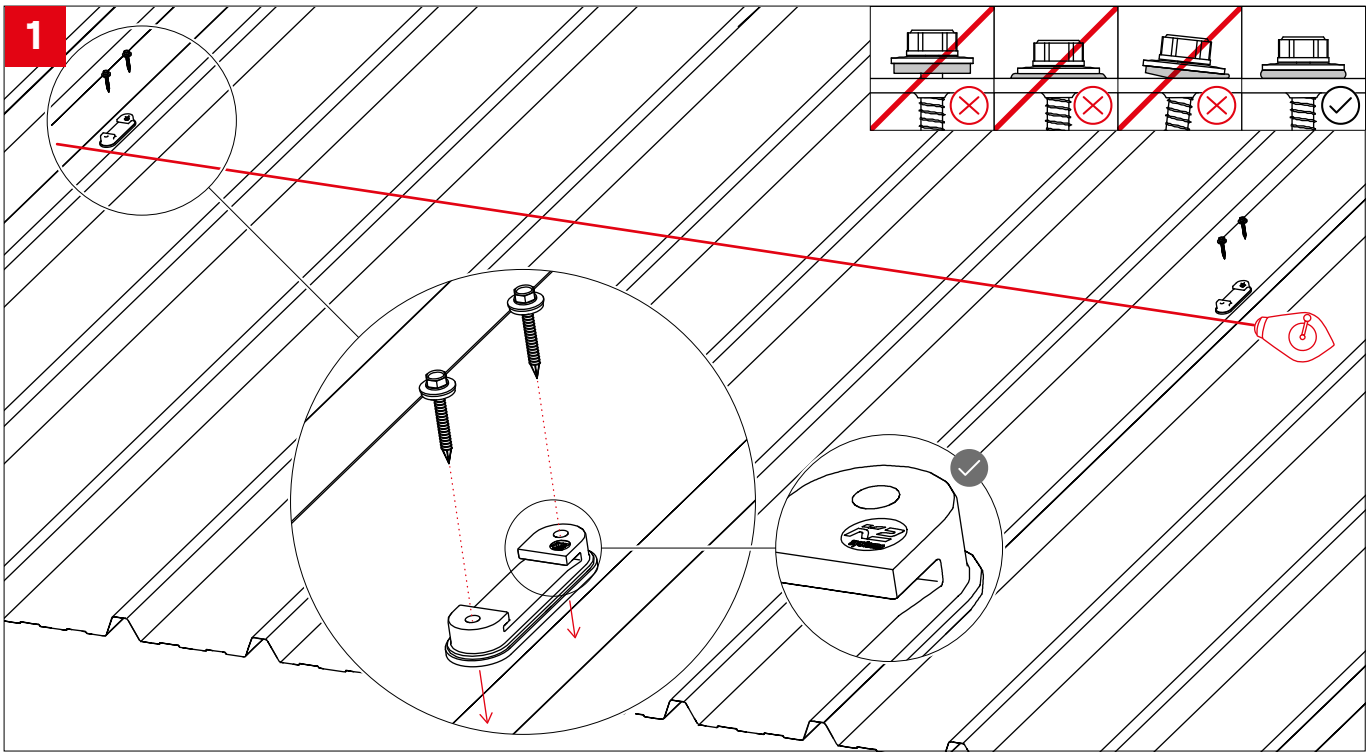

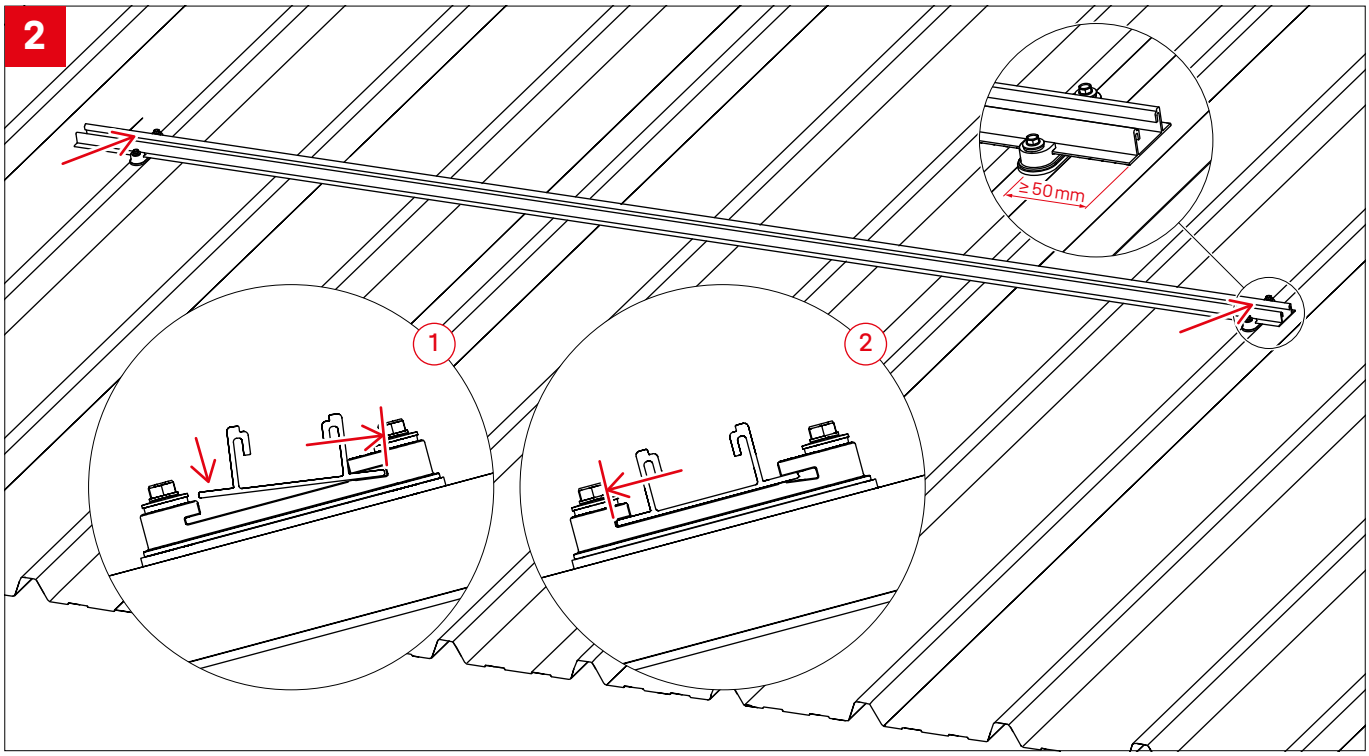

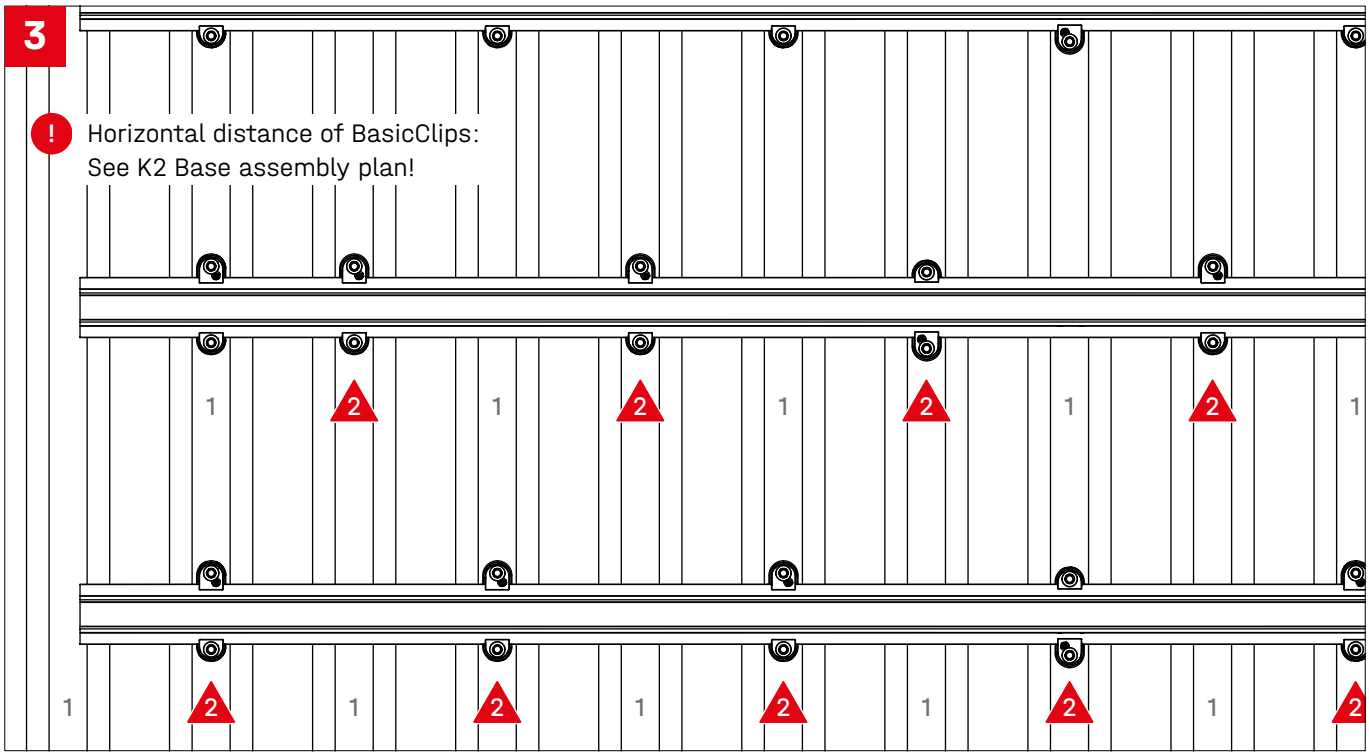
3
Horizontal distance of BasicClips:
See K2 Base assembly plan!
1
2
1
2
1
2
1
2
1
1
2
1
2
1
2
1
2
1
2

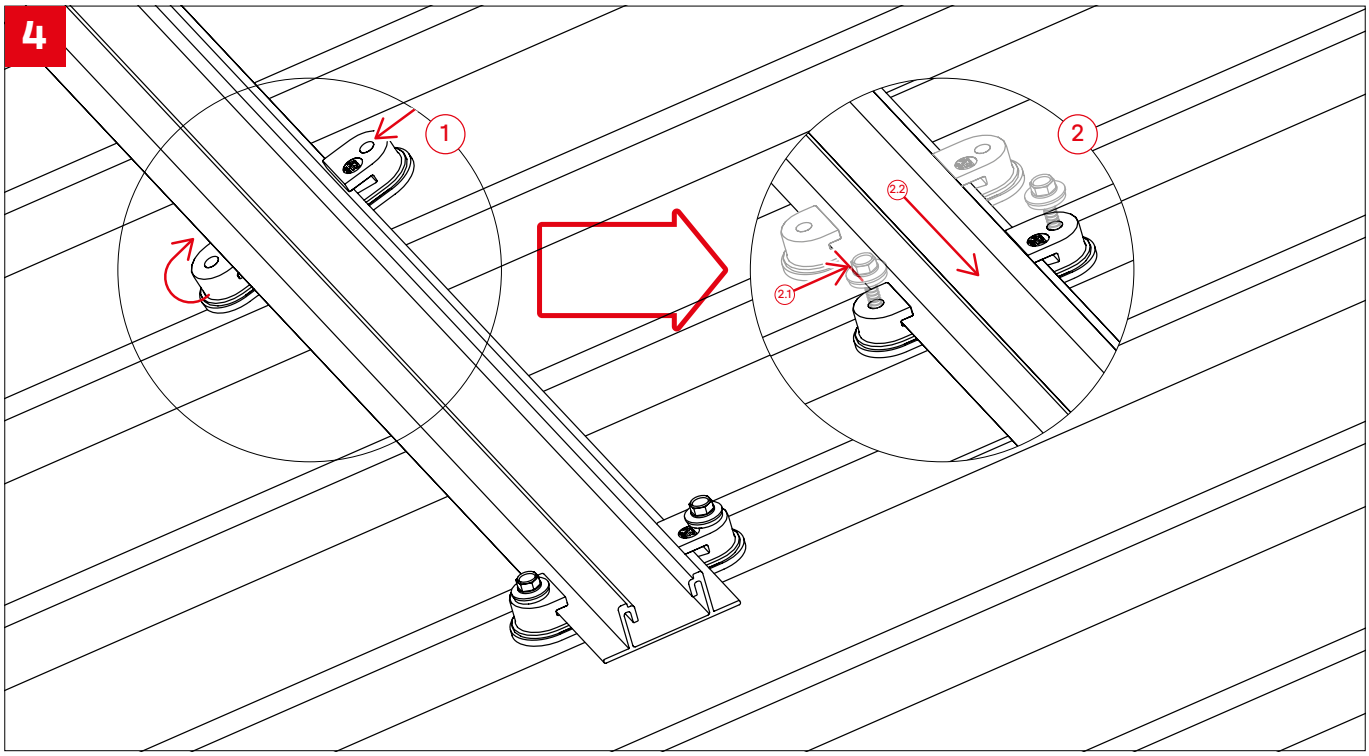
4
1
2
2.1
2.2

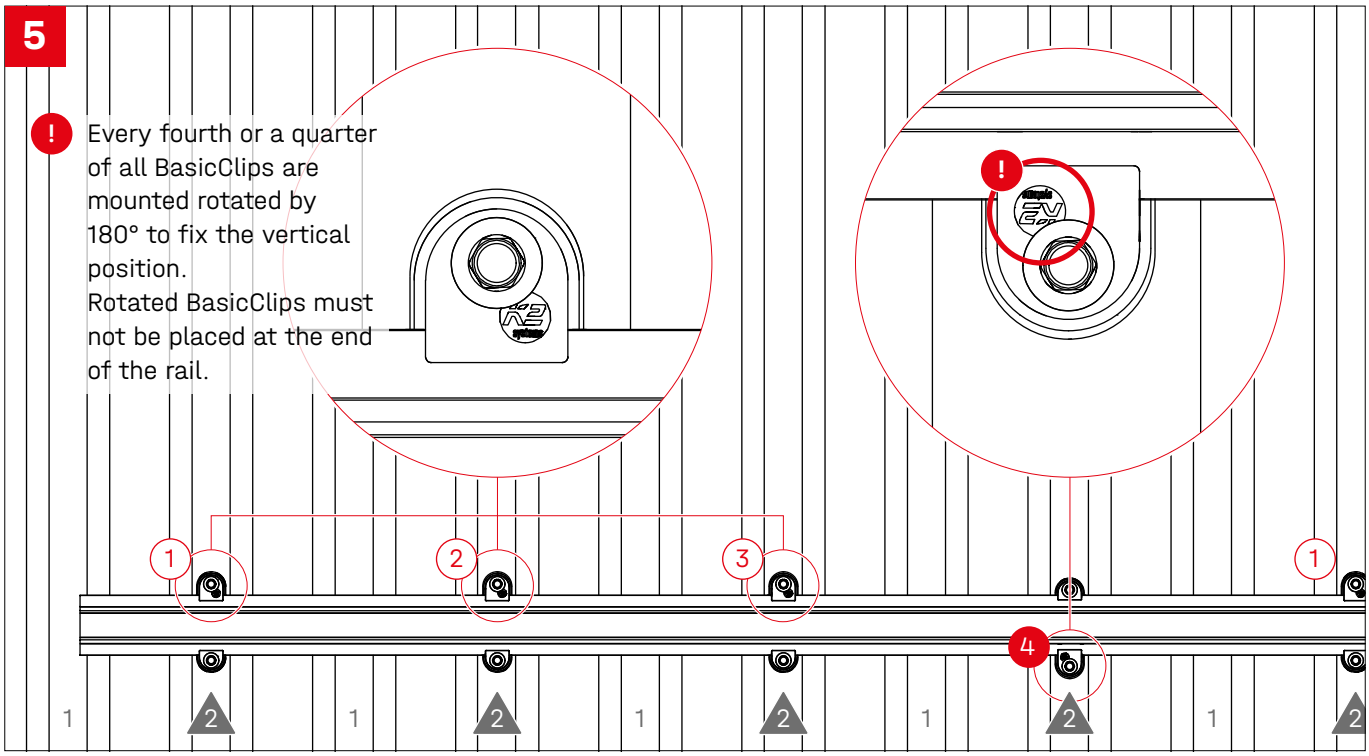
5
Every fourth or a quarter of all BasicClips are mounted rotated by 180° to fix the vertical position.
Rotated BasicClips must not be placed at the end of the rail.
1
2
3
4

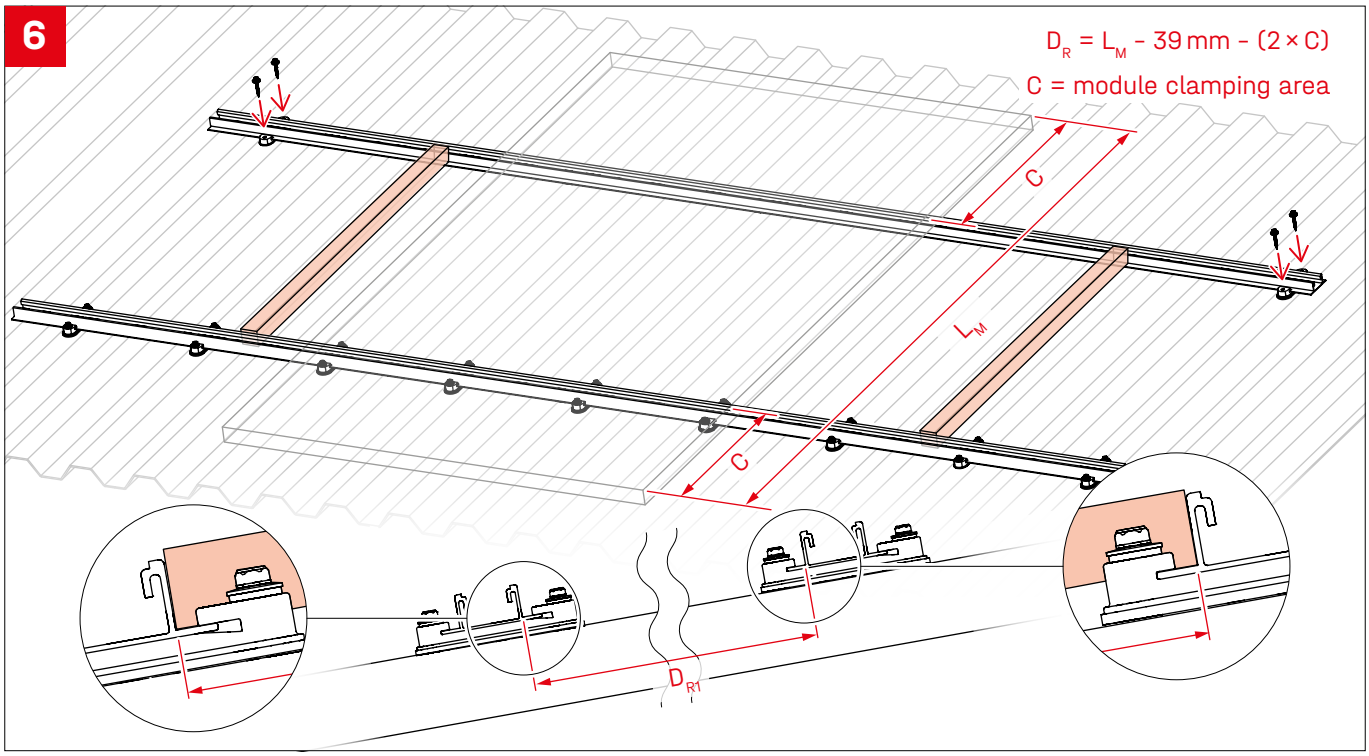
6
$D_R = L_M - 39\,mm - (2 \times C)$
C = module clamping area
C
L_M
D_{R1}

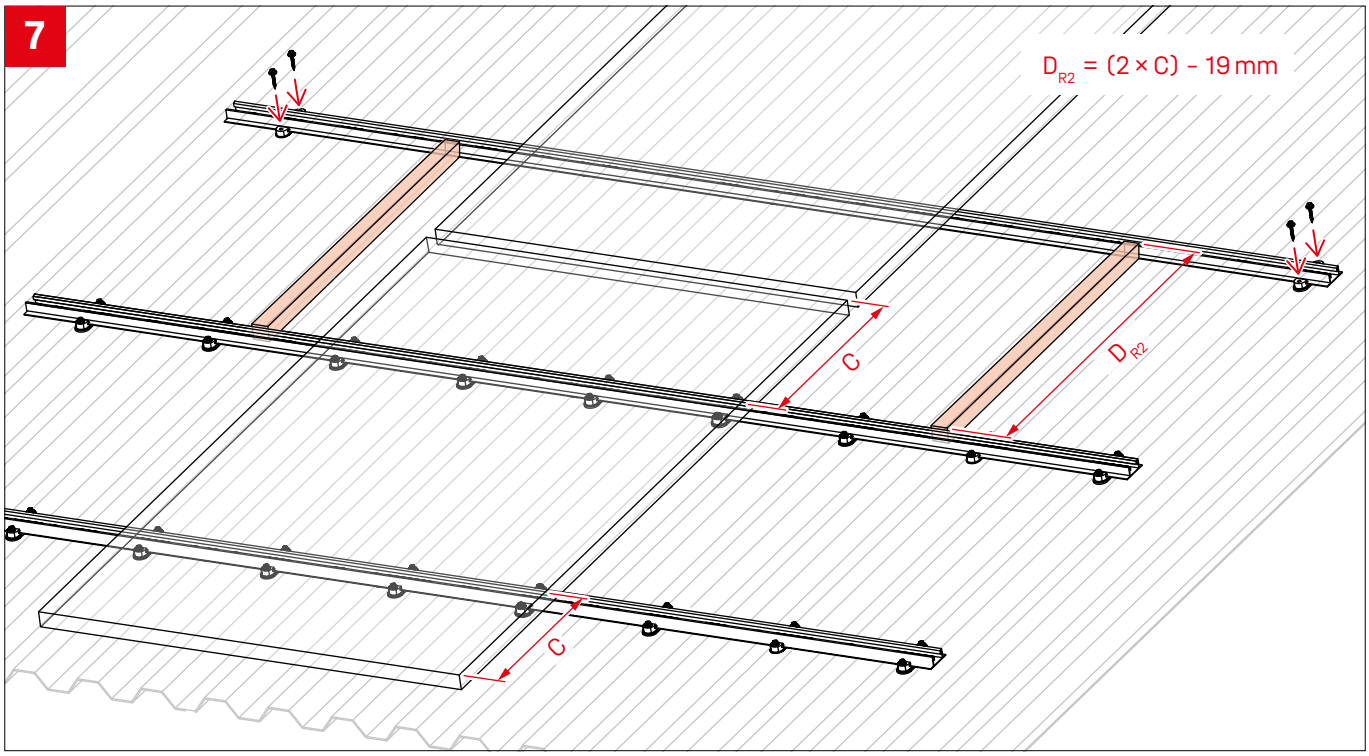
7
D_{R2} = (2 × C) - 19 mm
C
D_{R2}
C

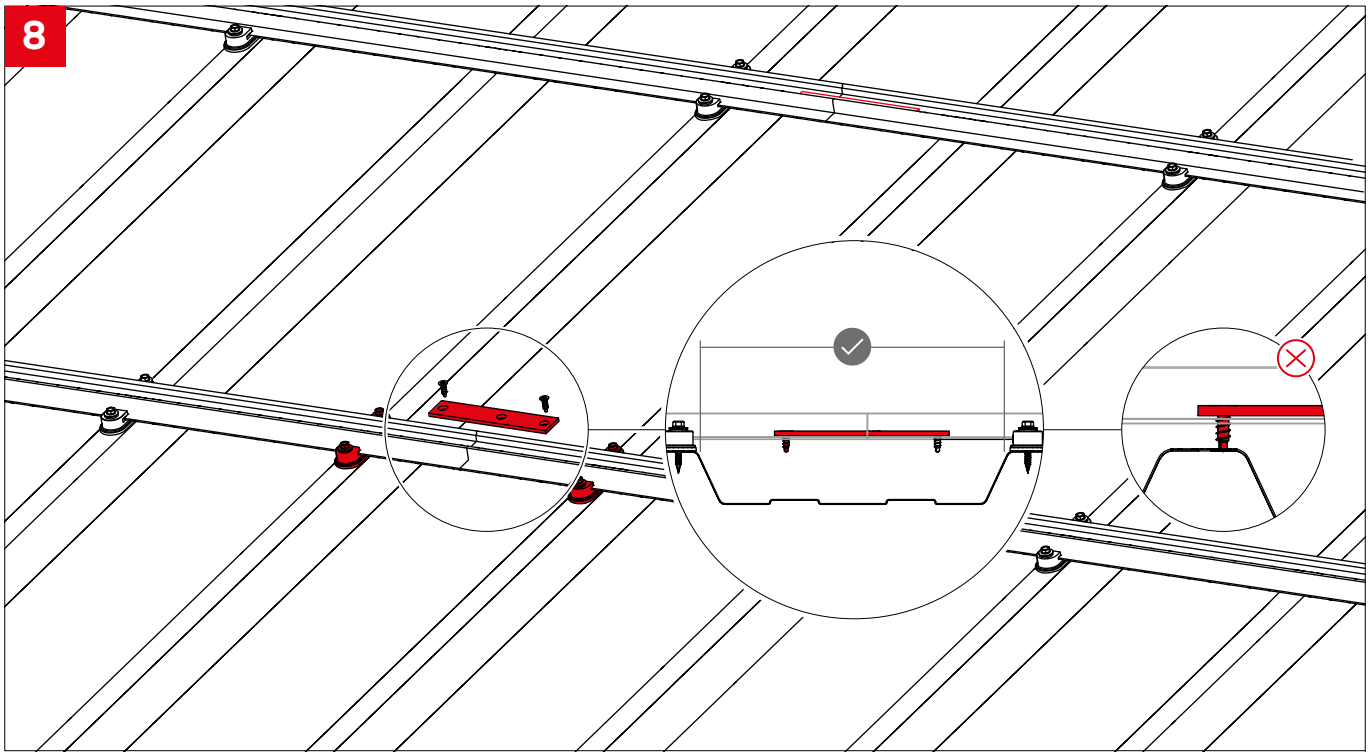
8

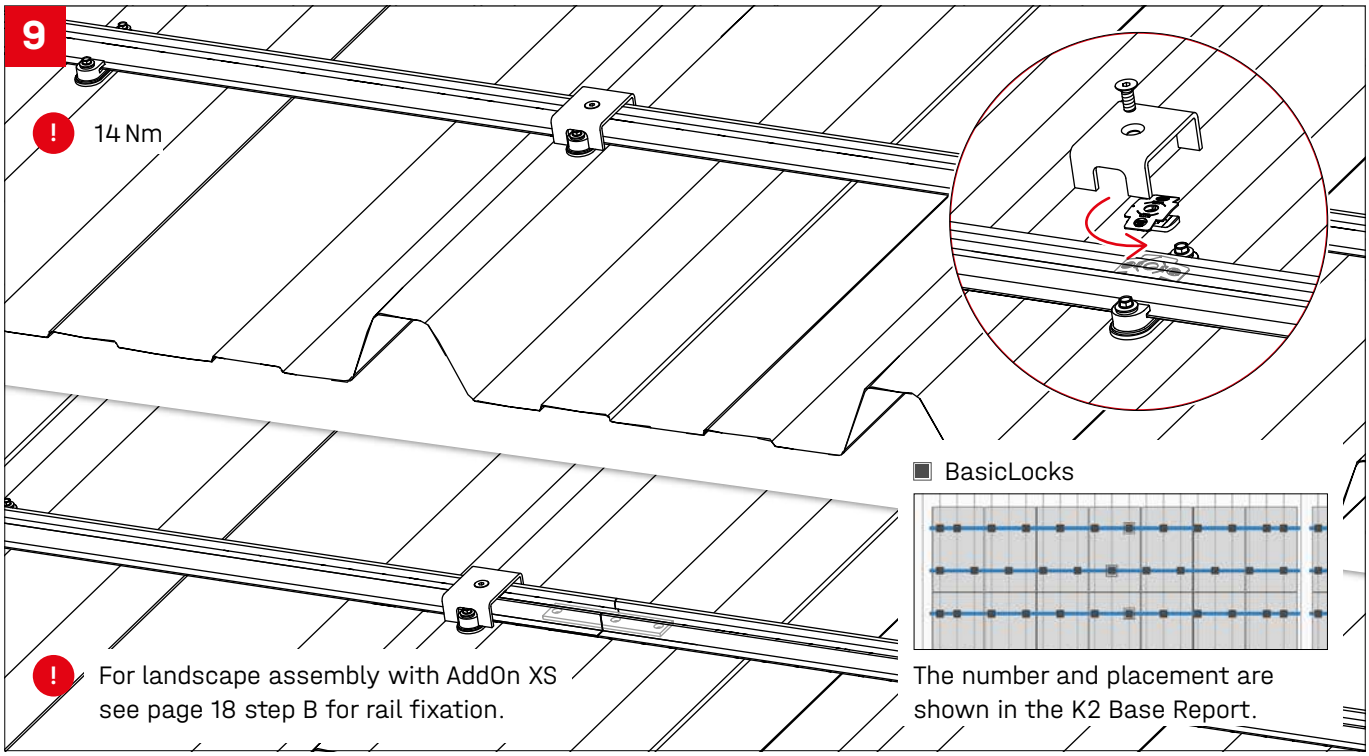
9
14 Nm
BasicLocks
For landscape assembly with AddOn XS see page 18 step B for rail fixation.
The number and placement are shown in the K2 Base Report.

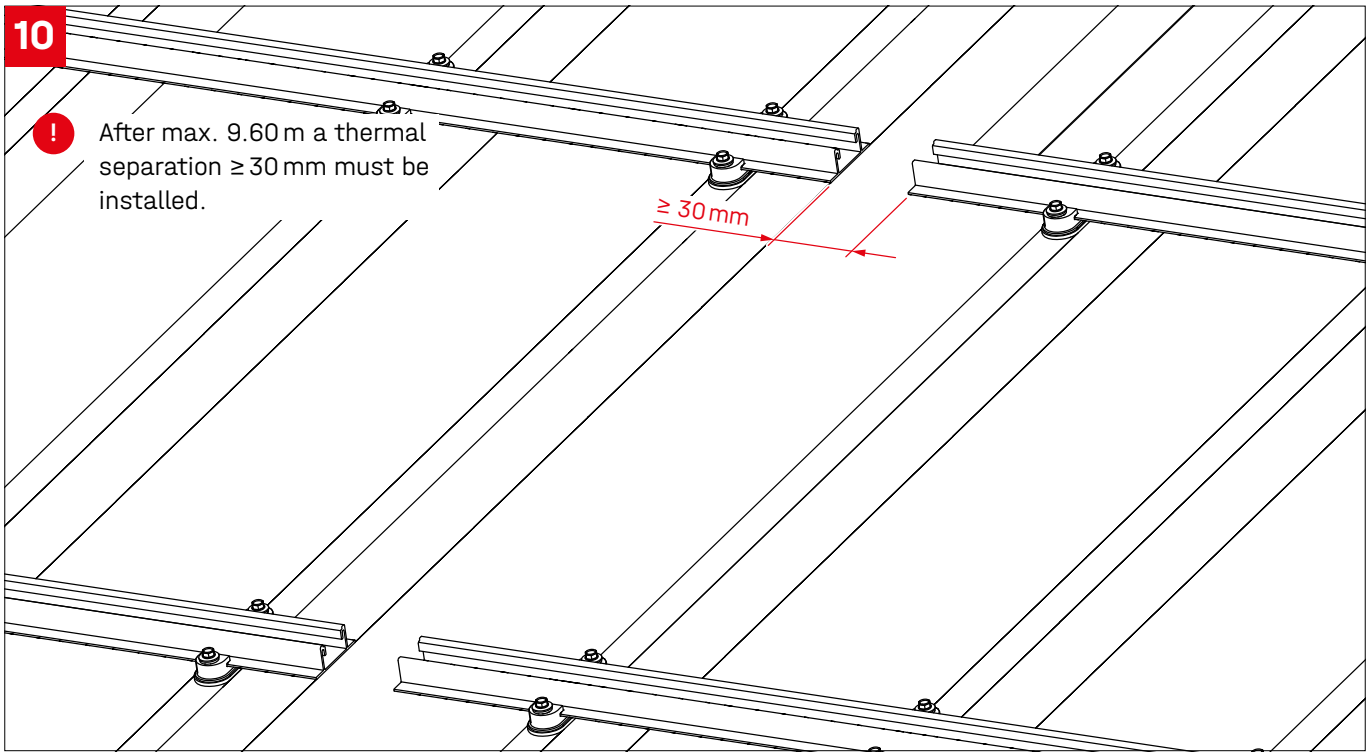
10
After max. 9.60 m a thermal separation ≥ 30 mm must be installed.
≥ 30 mm

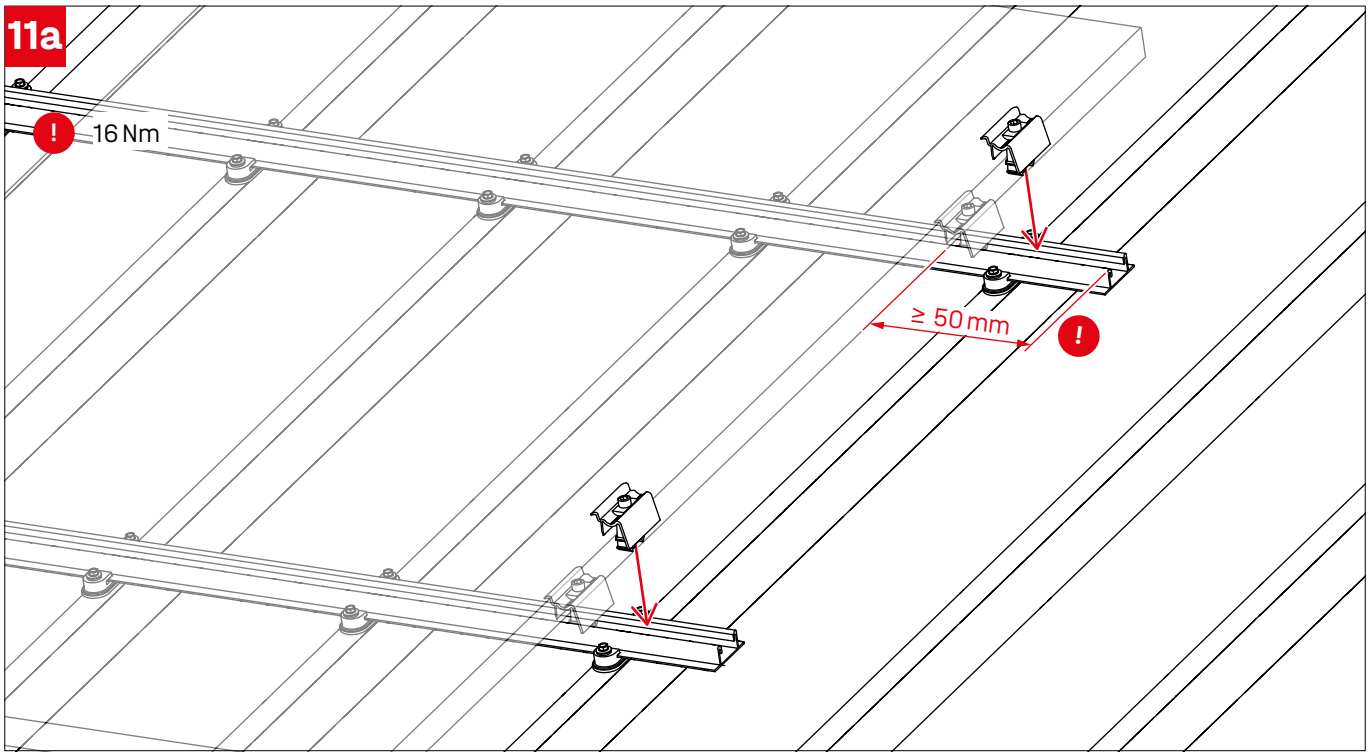
11a
!
16 Nm
≥ 50 mm
!

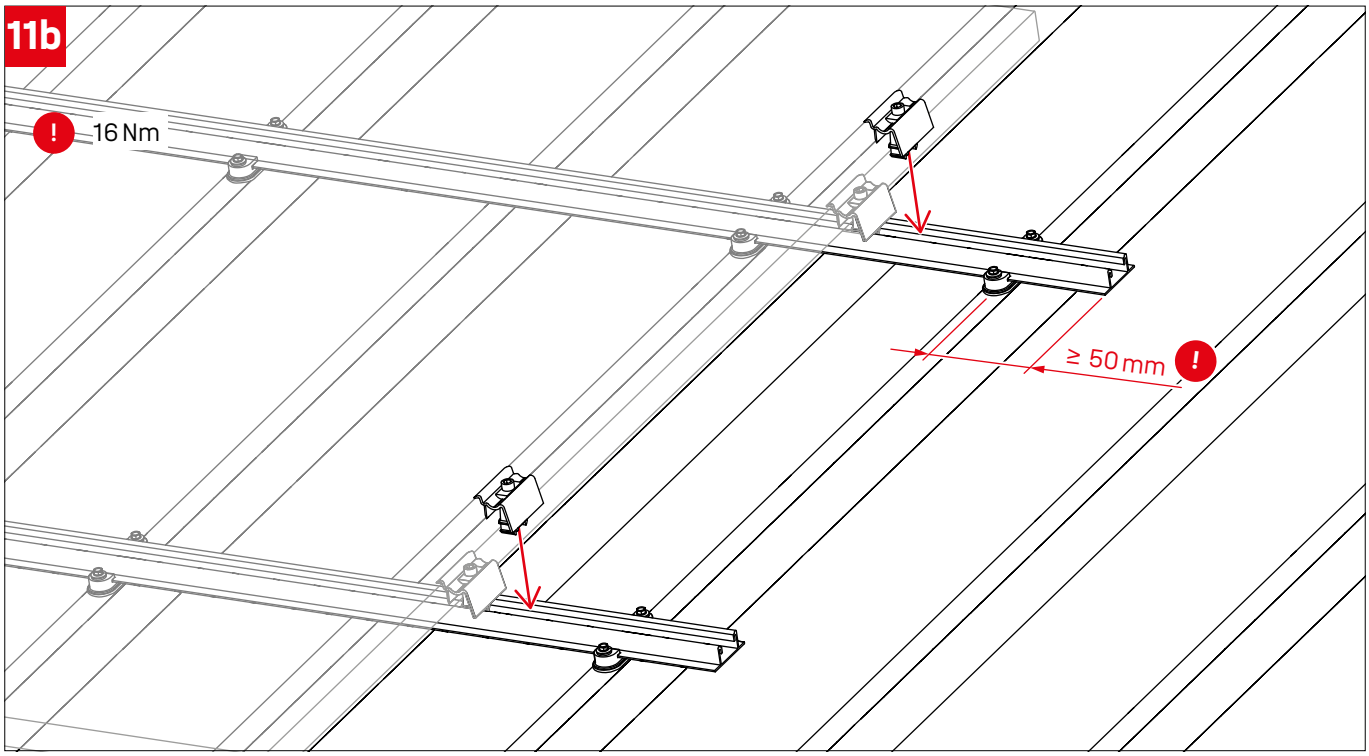
11b
!
16 Nm
≥ 50 mm
!

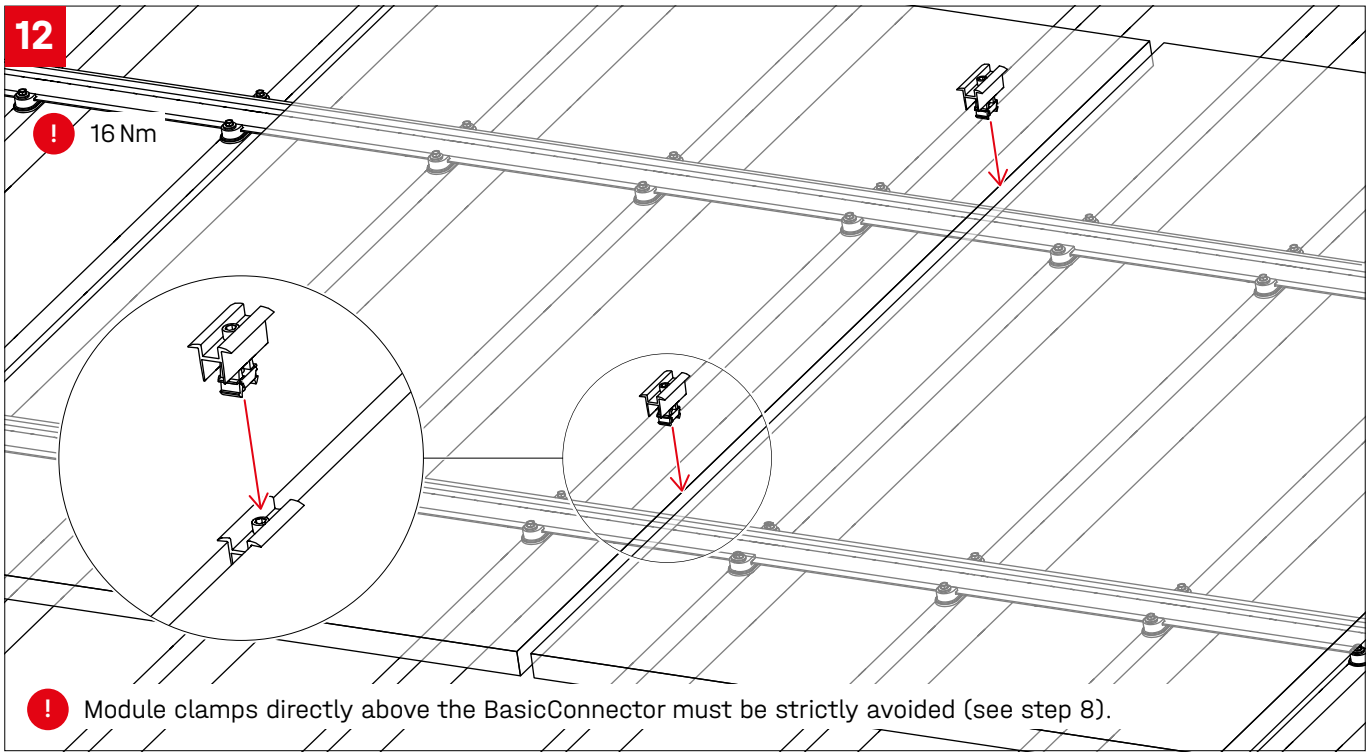
12
16 Nm
Module clamps directly above the BasicConnector must be strictly avoided (see step 8).

Alternative system assemblies

Thermal cut space saving method

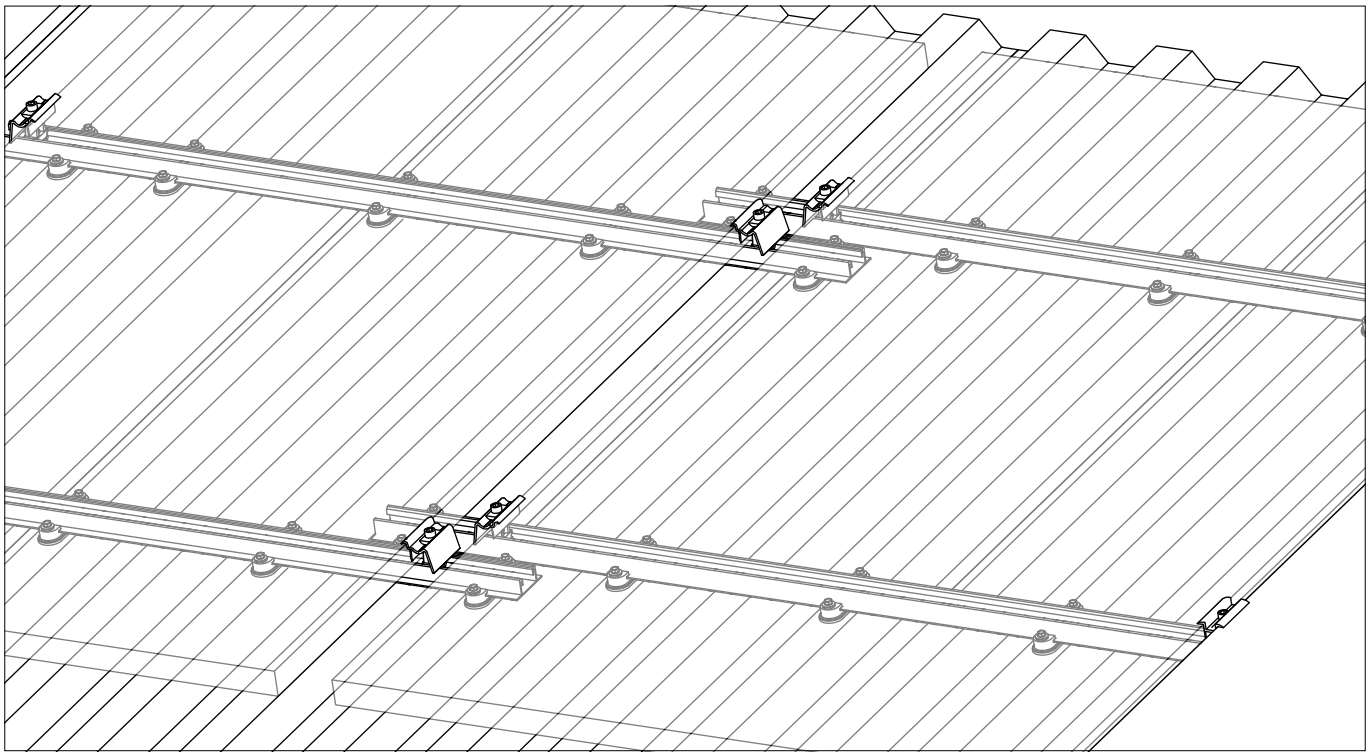

Landscape assembly with two layers of rails

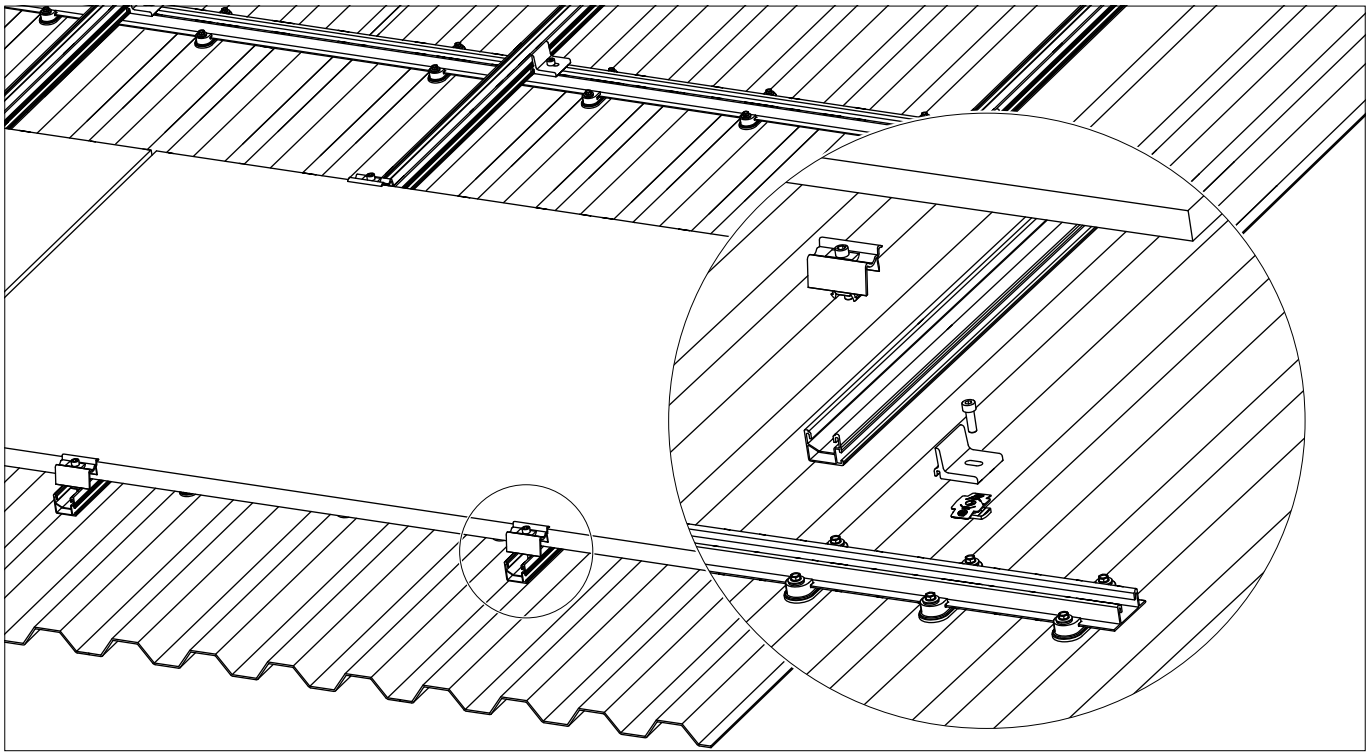

Landscape assembly with AddOn XS

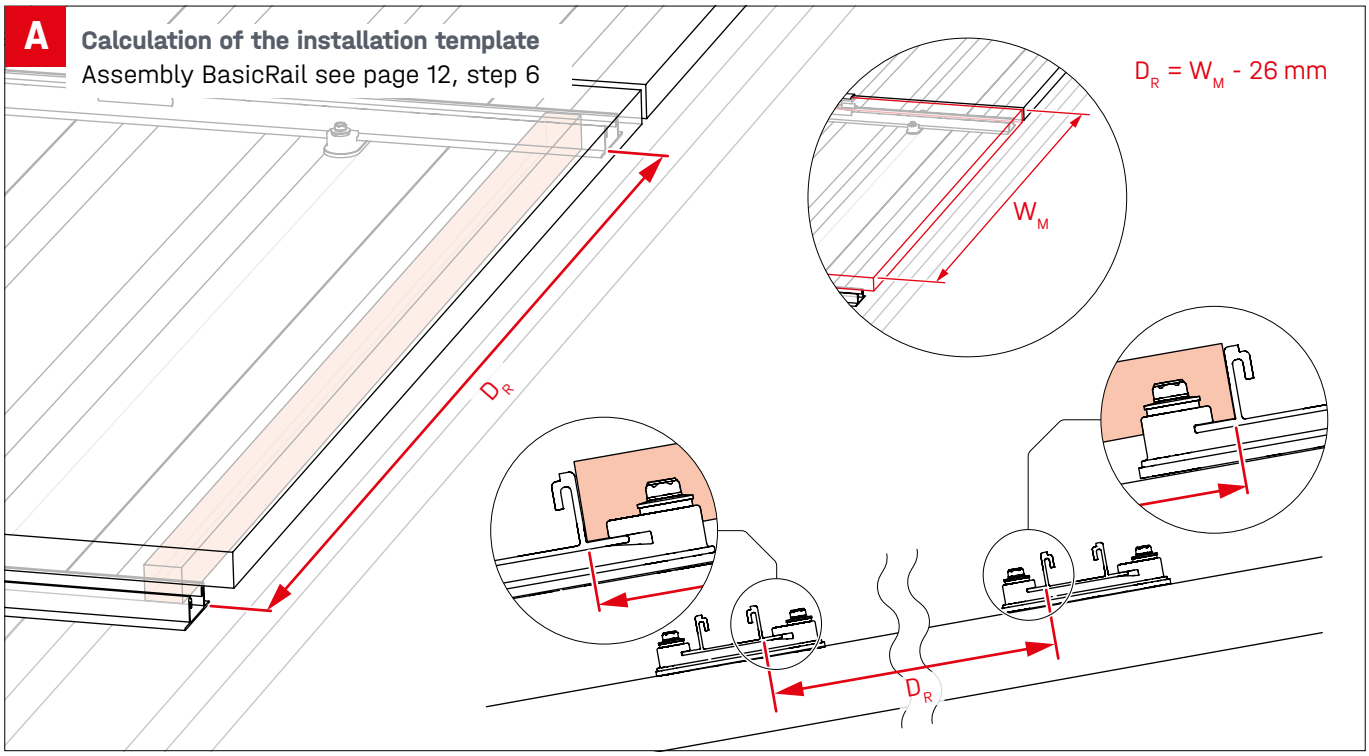

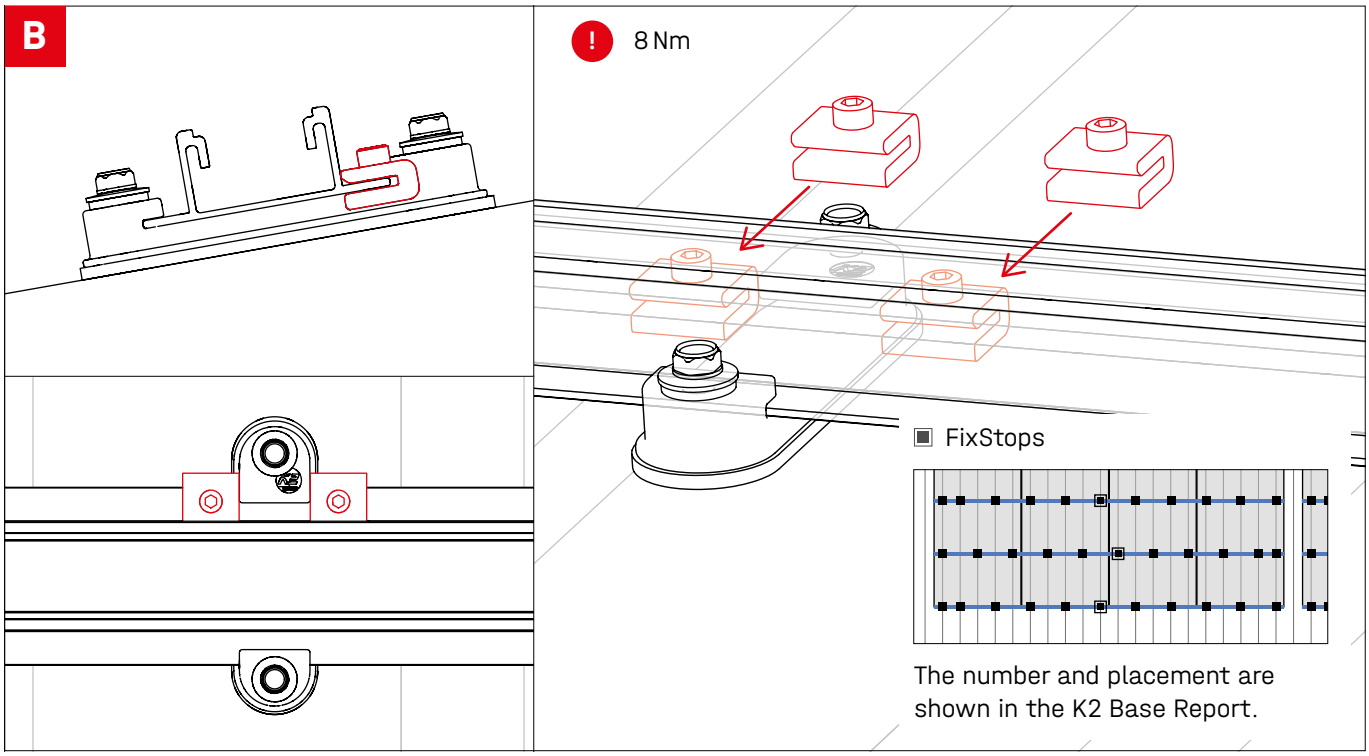

C Set module clamps

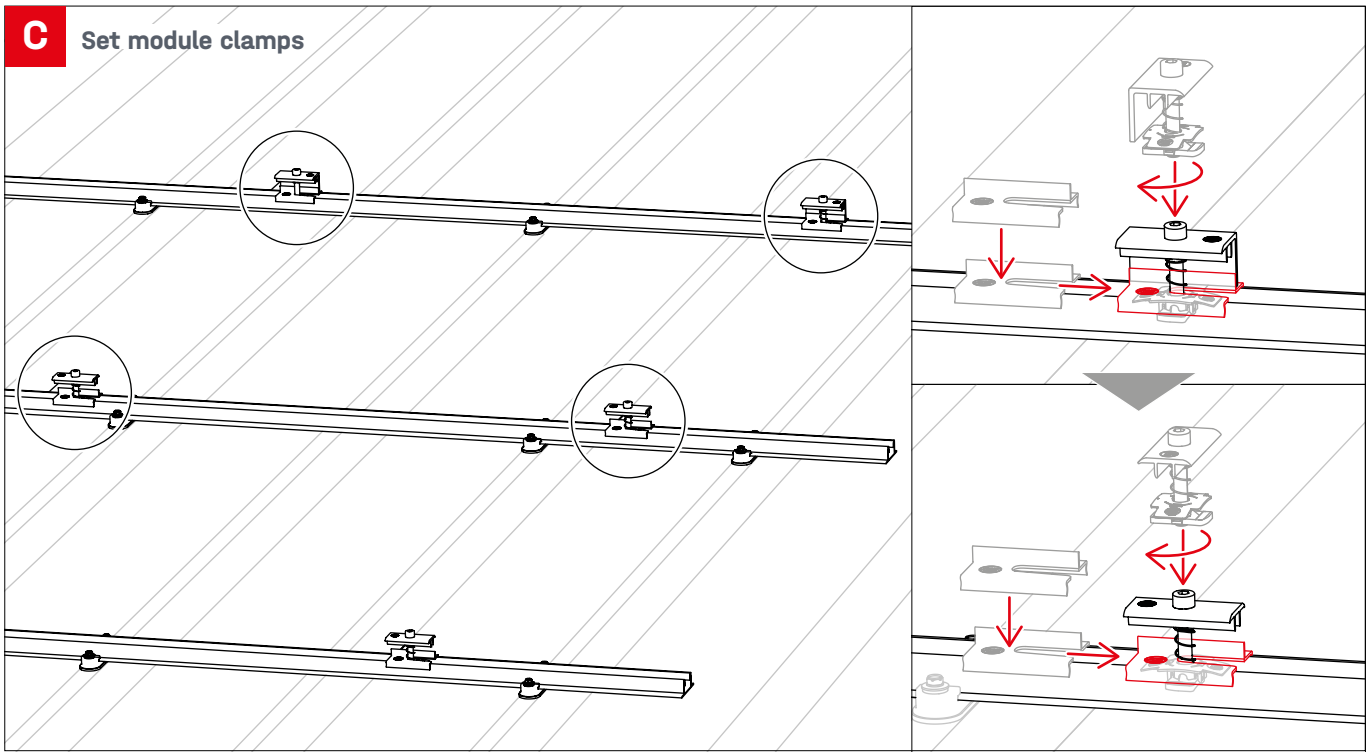

D1 ! Module assembly – from top to bottom

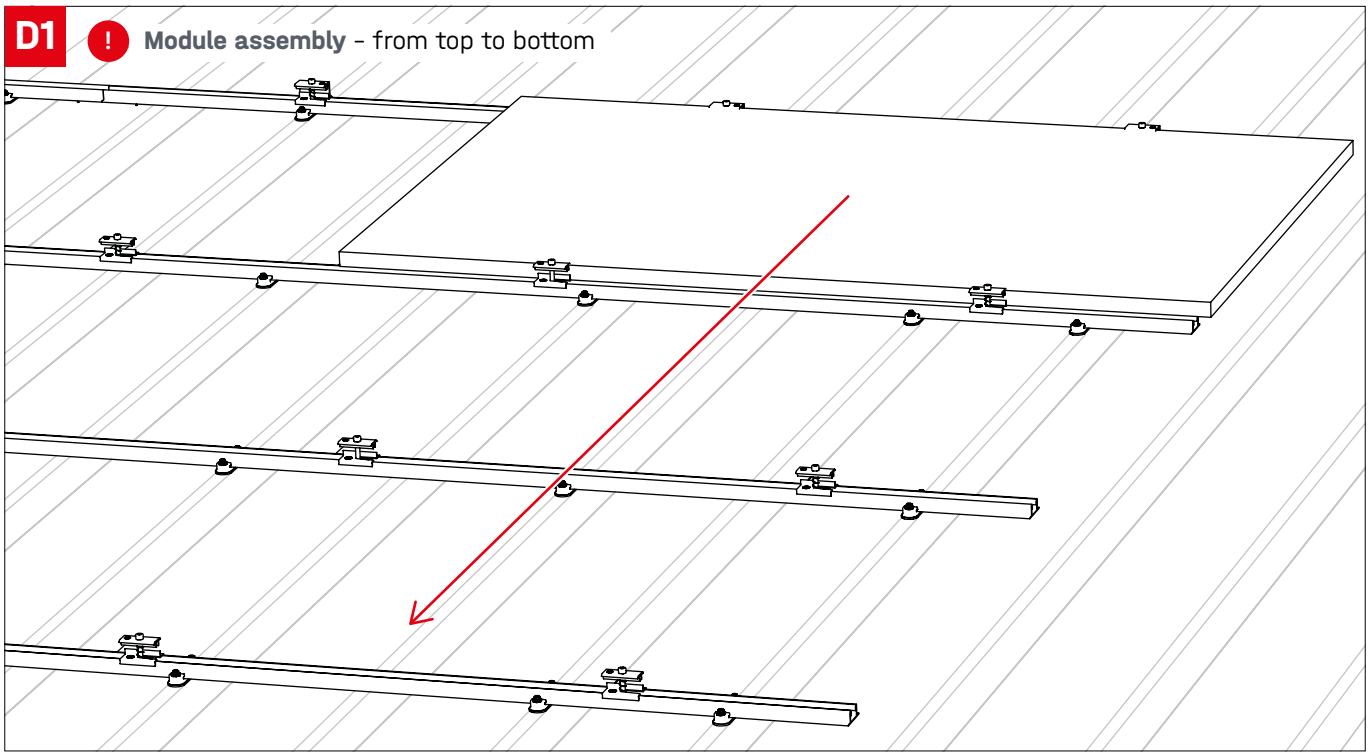

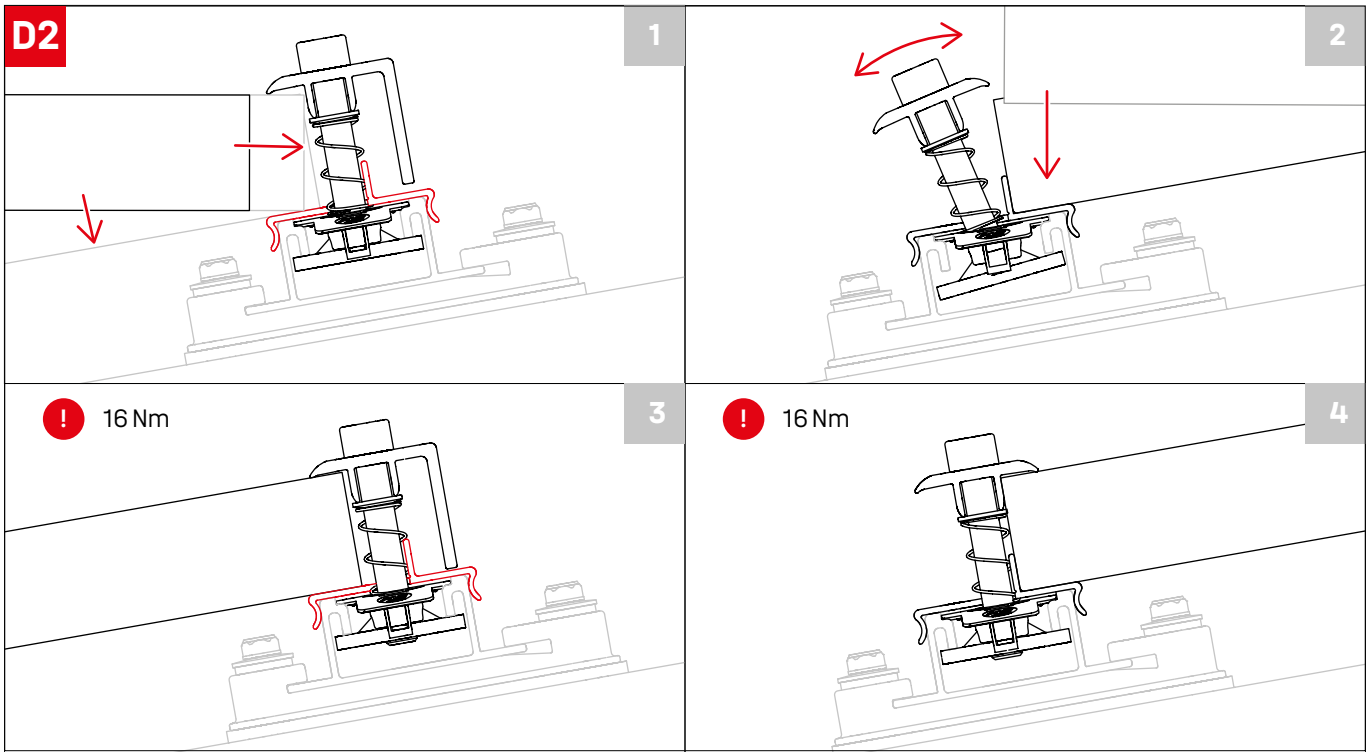
D2
1
2
16 Nm
3
16 Nm
4

Optional installation steps

Roof-parallel elevation with RailUp

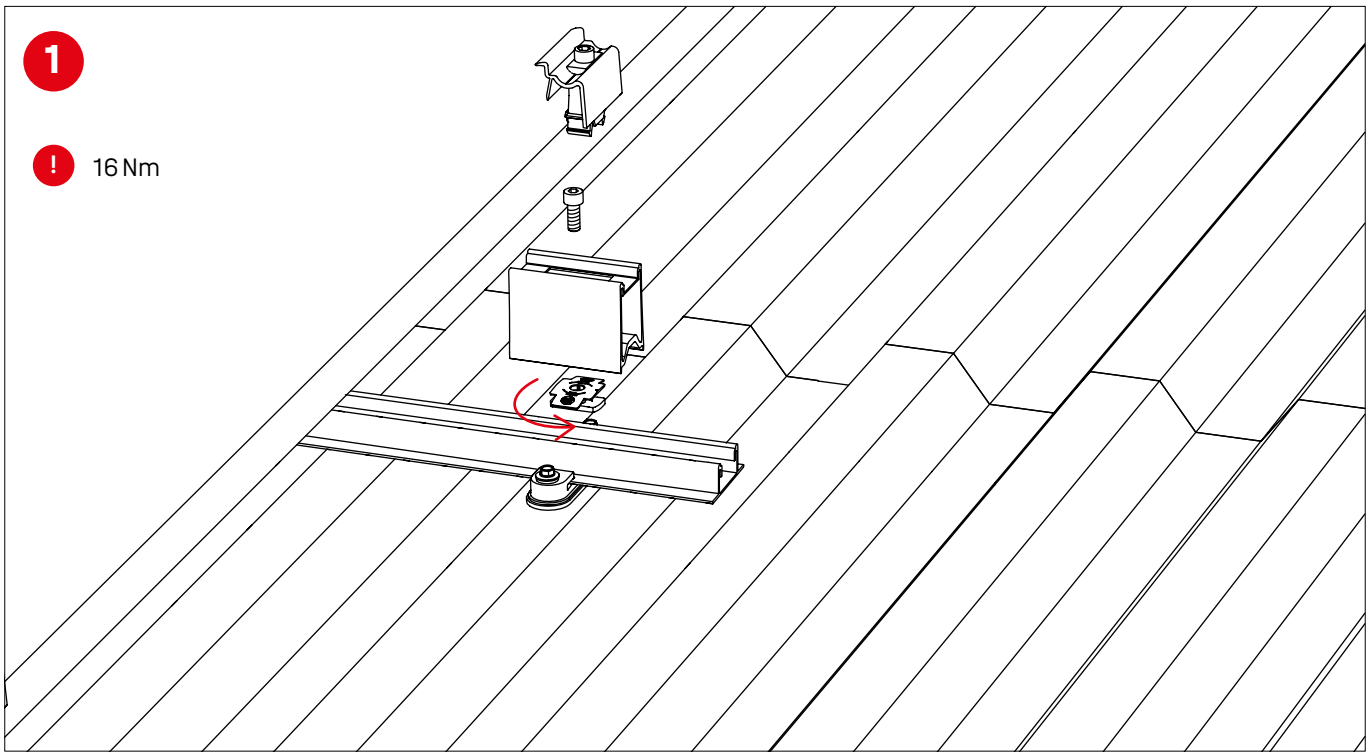

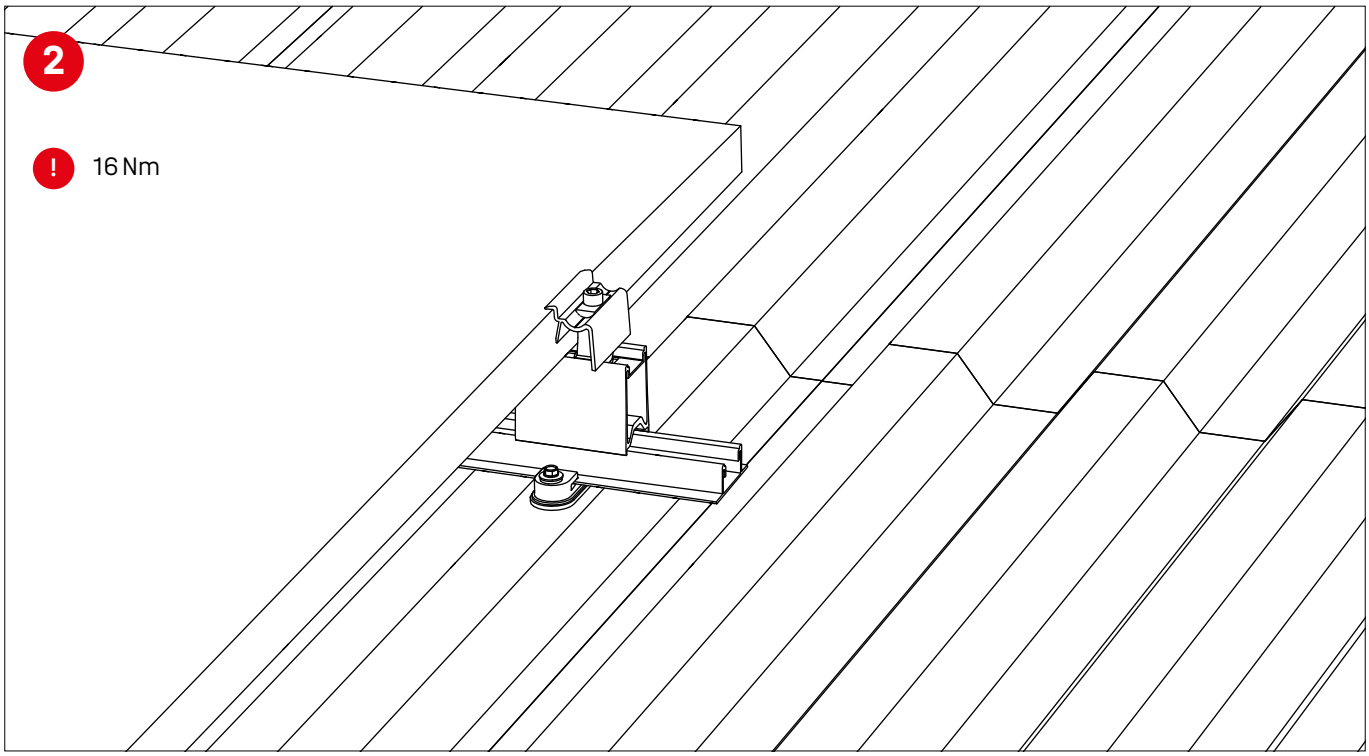

Optional installation steps

TerraGrif QL for K2 Clamp

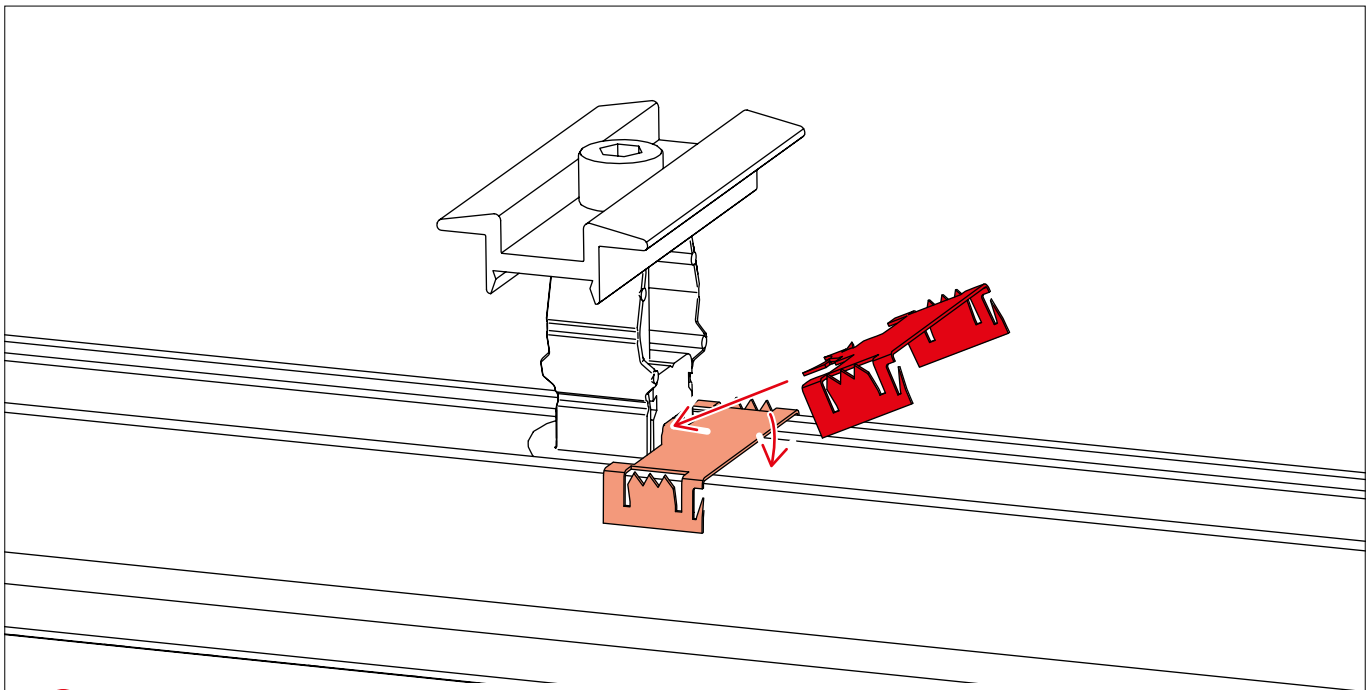

! Please observe recommendations "Lightning protection and equipotential bonding".

TerraGrif K2SZ for XS Clamp

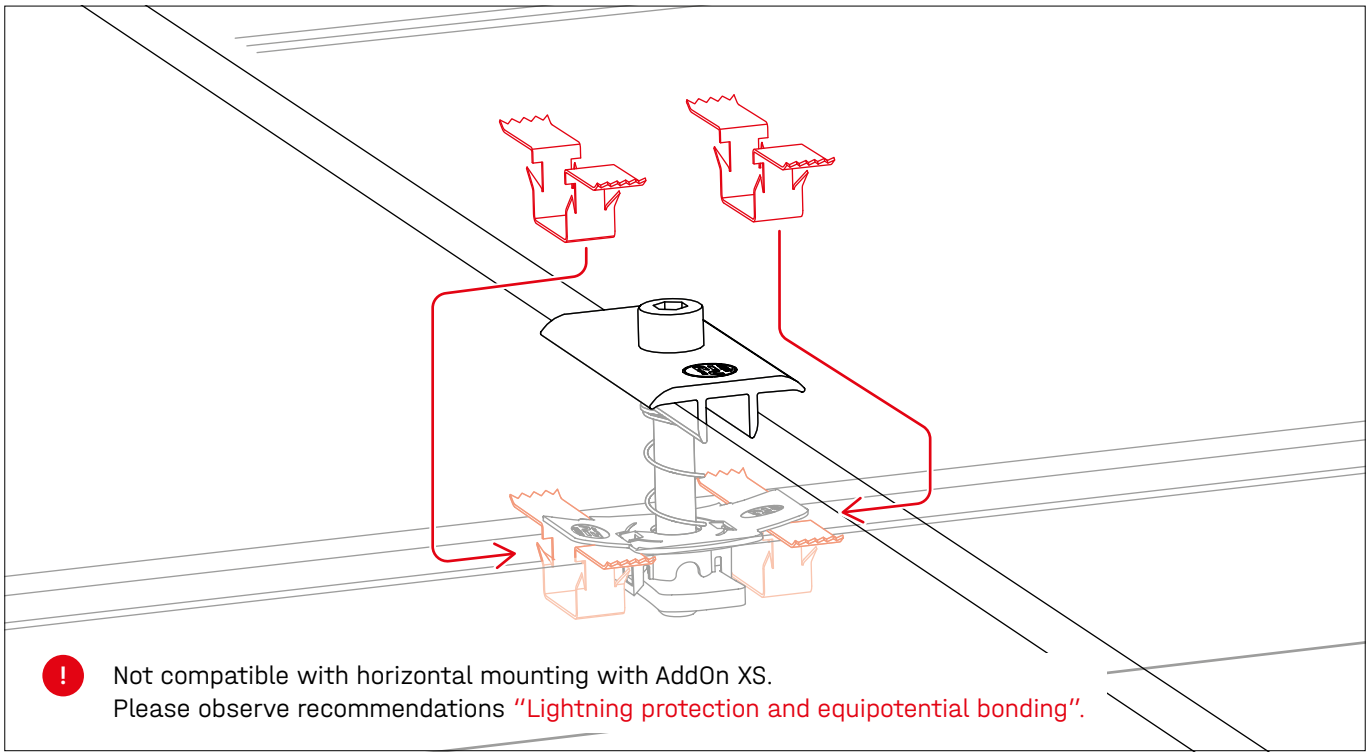

! Not compatible with horizontal mounting with AddOn XS.
Please observe recommendations "Lightning protection and equipotential bonding".

Notes

Connecting Strength

Thank you for choosing a K2 mounting system.

Mounting systems from K2 Systems are quick and easy to install. We hope these instructions have helped. Please contact us with any questions or suggestions for improvement. Our contact data:

- **k2-systems.com/en/contact**
- **Service Hotline: +49 (0)7159 42059-0**

Our General Terms of Business apply. Please refer:
k2-systems.com

K2 Systems GmbH
Haldenstraße 1 · 71272 Renningen · Germany
+49 (0) 7159 - 42059 - 0 · info@k2-systems.com · k2-systems.com

BasicRail Assembly EN V22 | 0526 · Subject to change
Product illustrations are exemplary and may differ from the original.