User Manual

CQ Series

CQ16/ High-Voltage Control Box

In order to prevent improper operation before use, please carefully read this manual.

Table of Contents

1. Introduction 2
2. Symbols 2
3. Safety 3
    3.1 Handling 3
    3.2 Installation 3
    3.3 Mounting 4
4. Response to Emergency Situations 5
5. Fire Protection Function 5
    5.1 Fire Extinguishing Mechanism 5
    5.2 Technical Specifications 6
6. Product Information 7
    6.1 CQ16 Specifications 7
    6.2 High-Voltage Control Box Specifications 7
    6.3 Description Of CQ 8
    6.4 Battery System Specifications for CQ 241.05 8
7. Product Features 10
    7.1 Battery System Features 10
8. Installation 12
    8.1 Items in the package 12
    8.2 Clearance 14
    8.3 Tools 15
    8.4 Installation Steps 15
    8.5 Communication and grounding cable connection 20
    8.6 System Operation 21
9. Commissioning 22
10. Exclusion 25
11. Troubleshooting and Maintenance 25
    11.1 Maintenance 25
    11.2 Storage with Low SOC 26
    11.3 Troubleshooting 26

1. Introduction

The document describes the installation, commissioning, maintenance and troubleshooting of the following high voltage battery listed below.

CQ

The battery chemistry of these products is Lithium Iron Phosphate. This manual is designed for qualified personnel only. The tasks described in this document should be performed by authorized and qualified technicians only.

After Installation the Installer must explain the user manual to the end user.

2. Symbols

	Symbol Explanation CE mark. The batteries complies with the requirements of the applicable CE guidelines.
	Caution, risk of electric shock.
	Do not place nor install near flammable or explosive materials.
	Install the product out of reach of children.
	Prohibit the use of water to extinguish fires.
	Prohibition of private maintenance.
	Prohibit Connector Reversal.
	Read the instruction manual before starting installation and operation.
	Do not dispose of the product with household wastes.
	Disconnect the equipment before carrying out maintenance or repair.

	Observe precautions for handling electrostatic discharge sensitive devices.
	PE conductor terminal.
	Caution, risk of electric shock, energy storage timed discharge.

3. Safety

Any work on the batteries should be handled by purchaser approved installer and hence it is understood that the purchaser approved installer should familiarize themselves with the contents of this manual before any maintenance or installation is carried out on the system.

3.1 Handling

- Do not expose battery to open flame.
- Store in a cool and dry place with ample ventilation.
- Do not store the product near water sources.
- Store the product on a flat surface.
- Recommend to store the product out of reach of children and animals.
- Do not damage the unit by dropping, deforming, impacting, cutting or penetrating with a sharp object. It may cause leakage of electrolyte or fire.
- Do not touch any liquid spilled from the product. There is a risk of electric shock or damage to skin.
- Always handle the battery wearing the insulated gloves.
- Do not step on the product or place any foreign objects on it. This can result in damage.
- Do not charge or discharge damaged battery.

3.2 Installation

- Do not connect the battery directly to inverter conductors or PV conductors. This will damage the battery and may result in explosion.
- After unpacking, please check the product for damages and missing parts.
- Make sure that the inverter and battery is completely turned off before commencing installation.
- Do not interchange the positive and negative terminals of the battery.
- Ensure that there is no short circuit of the terminals or with any external device.
- Do not exceed the battery voltage rating of the inverter.
- Do not connect the battery to any incompatible inverter.
- Do not connect different battery types together.
- Please ensure that all the batteries are grounded properly.
- Do not open the battery to repair or disassemble. Only Fox ESS is allowed to carry out any such repairs.
- In case of fire, use only dry powder fire extinguisher. Liquid extinguishers should not be used.
- Please refrain from installing the battery near any water source to prevent accidental submersion.
- Recommend to install the battery away from children or pets.
- Do not use battery in high static environment where the protection device might be damaged.
- Do not install with other batteries or cells.

- Please ensure on installation site that the deviation of voltages between new batteries and every single present battery is less than 0.5V.
- Recommend to check the new batteries mounted on-site comply to the warranty scope or have ever been re-charged within 6 months; on top of that, please make sure the SOC of present battery system onsite is 50%±5%.

3.3 Mounting

Make sure the installation site meets the following conditions:

- Ensure the installation area is protected from direct sunlight, rain, and snow accumulation, a shelter (e.g., rain canopy) is recommended.
- Keep the installation area away from high-temperature sources, flammable or explosive materials, and other potential explosion hazards such as gas valves, LPG cylinders, heat pumps, firewood stacks, etc.
- The installation area must be completely waterproof, with a hard, level floor, and the wall should not have noticeable inclined angle.
- Maintain low and stable humidity with good ventilation; dust and dirt within the installation area must be minimized.
- Position the installation area away from television antennas or antenna cables to avoid lightning strikes and electromagnetic interference.
- Avoid the presence of flammable debris around the battery, such as cotton, fabric, haystacks, etc., which may be ignited by sparks and then lead the fire source to the battery, thus causing the battery to burn.
- Avoid the presence of hot or flammable objects around the battery, such as hydraulic bottles (natural gas, oxygen, etc.), heat pumps and so on.

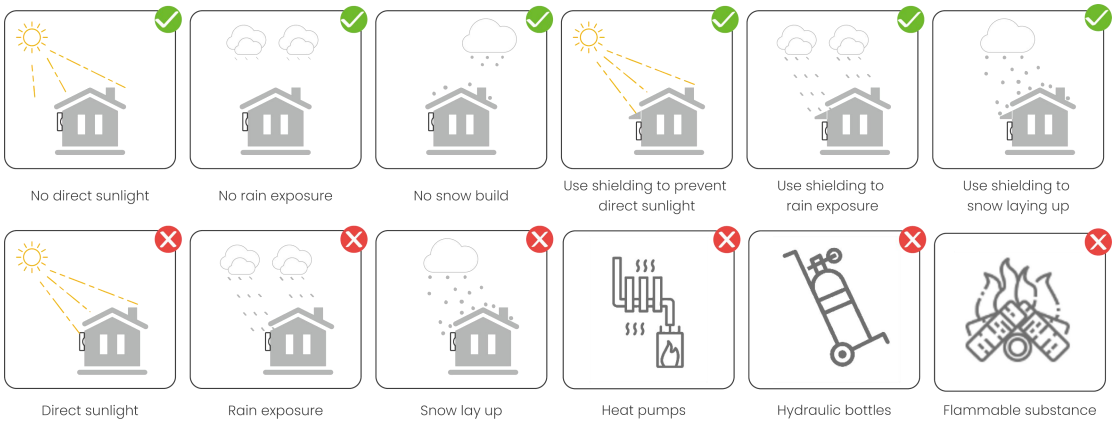

4. Response to Emergency Situations

The batteries comprise of multiple batteries connected in series. It is designed to prevent hazards or failures. However, Fox ESS cannot guarantee their absolute safety.
Under exposure to the internal materials of the battery the following recommendations should be carried out by the user.

- If there has been inhalation, please leave the contaminated area immediately and seek medical attention.
- If there has been contact with eyes, rinse the eyes with running water for 15 minutes and seek medical attention immediately.
- If there has been contact with the skin, wash the contacted area with soap thoroughly and seek medical attention immediately.
- If there has been ingestion, induce vomiting and seek medical attention.

Fire Situation
In situations where the battery is on fire, if it is safe to do so, disconnect the battery pack by turn off the circuit breaker to shut off the power to the system. Use FM-200 or CO_2 fire extinguisher for the battery and an ABC fire extinguisher for the other parts of the system.
Under any fire situation, please evacuate the people from the building immediately before trying to extinguish it.
Water Situation
The battery modules are not water resistant. Hence care should be taken not to get it wet. If you find the battery completely or partially submerged in water do not try to open. Contact an authorized personnel or Fox ESS for further instructions.

5. Fire Protection Function

Despite the extremely stable chemical properties of lithium iron phosphate batteries and the multiple protections, each battery unit is equipped with a fire protection module to further ensure the safety and reliability of Fox ESS batteries. This innovative module utilizes a new type of aerosol fire extinguishing device with features such as pressure-free storage, no maintenance required, high extinguishing efficiency, non-toxic and harmless characteristics.

5.1 Fire Extinguishing Mechanism

The fire extinguishing mechanisms of common agents mainly include isolation, smothering, cooling, and chemical suppression, with different agents exhibiting varying mechanisms. The fire extinguishing mechanism of thermal aerosols involves two main mechanisms: the cooling effect from endothermic decomposition and the chemical suppression effects in both gas and solid phases, which work synergistically. Additionally, the gaseous components in the products of the aerosol extinguishing agent also play a supportive role.

(1) Cooling Fire Extinguishing Effect from Endothermic Decomposition
The cooling effect of thermal aerosol extinguishing agents is primarily due to the endothermic decomposition of metal oxides and carbonates. When a fire occurs, the solid particles in the aerosol rapidly absorb heat from the fire source, resulting in a decrease in flame temperature. This reduction minimizes the heat radiating to the burning surface and lowers the energy required to dissociate vaporized combustible materials into free radicals. As a result, the combustion reaction is effectively suppressed.

(2) Gas Phase Chemical Suppression Effect

Under thermal conditions, vaporized metal ions, such as strontium (Sr), potassium (K), and magnesium (Mg), exist as vapors and participate in multiple chain reactions with active combustion radicals, including hydrogen (H•), hydroxyl (•OH), and oxygen (O•). For example:

$Sr+2{\bullet}OH \rightarrow Sr(OH)_2$

$Sr+O{\bullet} \rightarrow SrO$

$Sr(OH)_2+2H{\bullet} \rightarrow Sr+2H_2O$

Through continuous action, this process consumes active combustion groups, significantly reducing their concentration and effectively suppressing combustion.

(3) Solid Phase Chemical Suppression Effect

The solid particles in thermal aerosol extinguishing agents can adsorb intermediates such as •OH, H•, and O• from chain reactions, catalyzing their recombination into stable molecules. This interrupts the essential branching chain reactions in the combustion process. For example:

$K_2O\ (s)+2H\ (g) \rightarrow 2KOH\ (s)$ $\quad$ $KOH\ (s)+OH\ (g) \rightarrow KO\ (s)+H_2O\ (g)$

$K_2O\ (s)+O\ (g) \rightarrow 2KO(s)$ $\quad$ $KO(s)+H(g) \rightarrow KOH$

5.2 Technical Specifications

Activation method: Thermal activation

Thermal activation temperature: **≥ 170°C**

Discharge time: ≤ **2 seconds**

Notes:

Please contact Fox ESS for immediate replacement if the fire protection module is activated.

Non-professionals should not disassemble the battery without authorization.

Do not touch the device until the casing has cooled after the internal fire extinguisher has been activated, to prevent burns.

For further assistance, please contact an authorized personnel or Fox ESS for further instructions.

6. Product Information

1. CQ16 is the battery module, **it needs to be used with High-Voltage Control Box controller**;
2. High-Voltage Control Box is the controller of the whole system, so each system must have one High-Voltage Control Box;
3. Our system consists of at least 3 CQ16+ 1 High-Voltage Control Box and up to 15 CQ16+ 1 High-Voltage Control Box.

6.1 CQ16 Specifications

Specifications for CQ16	
Model No.	CQ16
Operating temperature range (°C)	Charge: 0~55 Discharge: -10~55
Storage temperature (°C)	-10~55
Humidity (%)	5~95
Nominal voltage* (V)	51.2
Nominal capacity (Ah)	314
Nominal energy (kWh)	16.07
Battery voltage range (V)	46.4~58.4
Max. Continuous discharge/charge current (A)	240/240
(CC-CV) Standard charging current (A)	157
Constant current and voltage charging cut-off current (A)	≤16
Peak discharge current (A)	470@60S
Altitude (m)	≤3000
Dimensions (W*D*H) (mm)	390*810*235
Weight (kg)	115±5%
Communication interfaces	CAN
*Voltage here is single unit data.	

6.2 High-Voltage Control Box Specifications

Specifications for High-Voltage Control Box	
Operating voltage range (Vdc)	101~1000
Max. charge/discharge current (A)	240/240
Total voltage measurement accuracy (%FSR)	±0.5
Current measurement range (A)	-240~+240
Communication interfaces	CAN
Charge/Discharge efficiency (%)	>92
Operating temperature (°C)	Charge: 0~55 Discharge: -10~55
Storage temperature (°C)	-10~55
Humidity (%)	5~95
Weight (kg)	29±5%
Dimensions (W*D*H) (mm)	390*810*235

6.3 Description Of CQ

Model	Nominal voltage (V)	Rated energy (kWh)	Composition
CQ 48.21	153.6	48.21	High-Voltage Control Box*1+CQ16*3
CQ 64.28	204.8	64.28	High-Voltage Control Box*1+CQ16*4
CQ 80.35	256	80.35	High-Voltage Control Box*1+CQ16*5
CQ 96.42	307.2	96.42	High-Voltage Control Box*1+CQ16*6
CQ 112.49	358.4	112.49	High-Voltage Control Box*1+CQ16*7
CQ 128.56	409.6	128.56	High-Voltage Control Box*1+CQ16*8
CQ 144.63	460.8	144.63	High-Voltage Control Box*1+CQ16*9
CQ 160.7	512	160.7	High-Voltage Control Box*1+CQ16*10
CQ 176.77	563.2	176.77	High-Voltage Control Box*1+CQ16*11
CQ 192.84	614.4	192.84	High-Voltage Control Box*1+CQ16*12
CQ 208.91	665.6	208.91	High-Voltage Control Box*1+CQ16*13
CQ 224.98	718.8	224.98	High-Voltage Control Box*1+CQ16*14
CQ 241.05	768	241.05	High-Voltage Control Box*1+CQ16*15

6.4 Battery System Specifications for CQ 241.05

Specifications for CQ 241.05	
Model No.	CQ 241.05
Technical properties	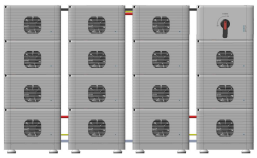
Battery designation	IFpP73/175/208[(16S)15S]E/-10+50/90
The number of batteries	High-Voltage Control Box*1+CQ16*15
Nominal voltage (V)	768
Nominal capacity (Ah)	314
Nominal energy (kWh)	241.05
Battery voltage range (V)	696~876
Max. charge/discharge current (A)	240/240
(CC-CV) Standard charging current (A)	157

Constant current and constant voltage charging cut-off current (A)	16
Peak discharge current (A)	470@60S
Storage temperature (°C)	-10~55
Operating charge/discharge temperature (°C)	0~55/-10~55
Cycle life	6000 cycle (70%SOH), @25°C@90% DOD @0.5C
Ingress protection	IP20
Protective class	Class Ⅰ
Dimensions (W*D*H) (mm)	1710*810*1010
Weight (kg)	1763
Communication interfaces	CAN

7. Product Features

7.1 Battery System Features

The batteries have been fitted with multiple protection systems to ensure the safe operation of the system. Some of the protection system includes:

- Inverter interface protection: Over Voltage, Over Current, External Short Circuit, Reverse Polarity, Ground Fault, Over Temp, In Rush Current.
- Battery protection: Internal Short Circuit, Over Voltage, Over Current, Over Temp, Under Voltage.

The battery system contains the following Interface to allow it to connect and operate efficiently.

CQ16 Features:

- Interface:

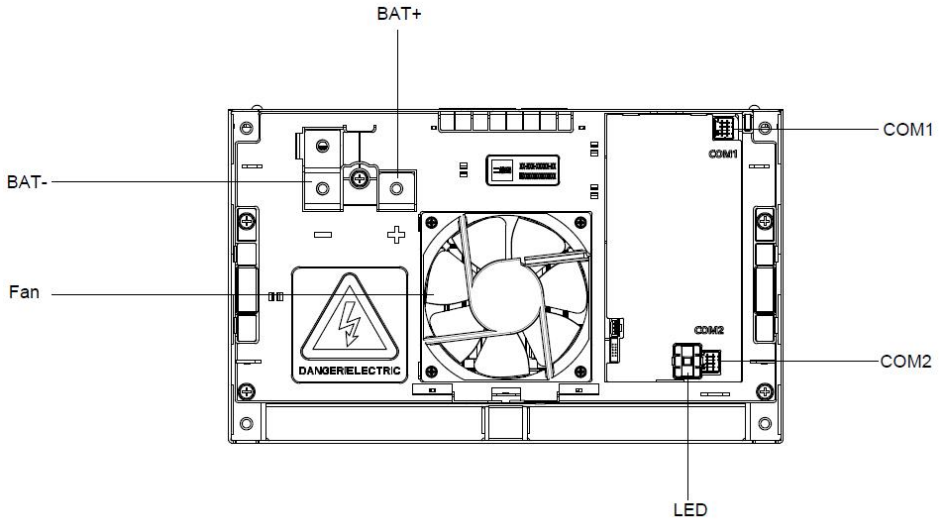

Interface	Description
BAT-	BAT negative terminal
BAT+	BAT positive terminal
Fan	Ventilation and heat dissipation
LED	Battery pack status display
COM1	Connection position of battery module communication and power supply input
COM2	Connection position of battery module communication and power supply output

High-Voltage Control Box Features:

- Interface:

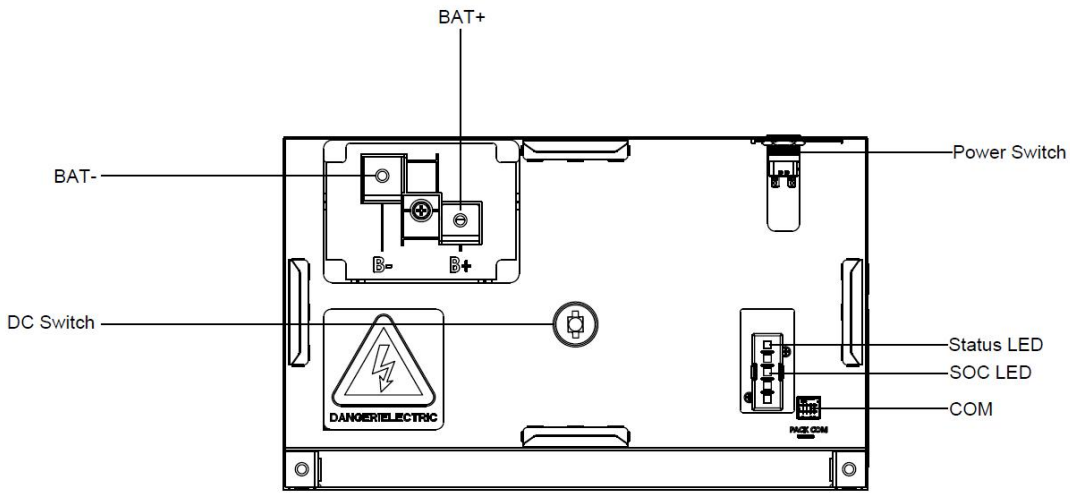

Interface	Description
BAT-	BAT negative terminal
BAT+	BAT positive terminal
DC Switch	Power switch, battery charge and discharge circuit switch
Status LED and SOC LED	LED display specific alarm information and battery system power
COM	Communication interface with the battery pack
Power Switch	System power on switch, press and hold switch for 3 seconds, and then release t he switch, the system starts to work

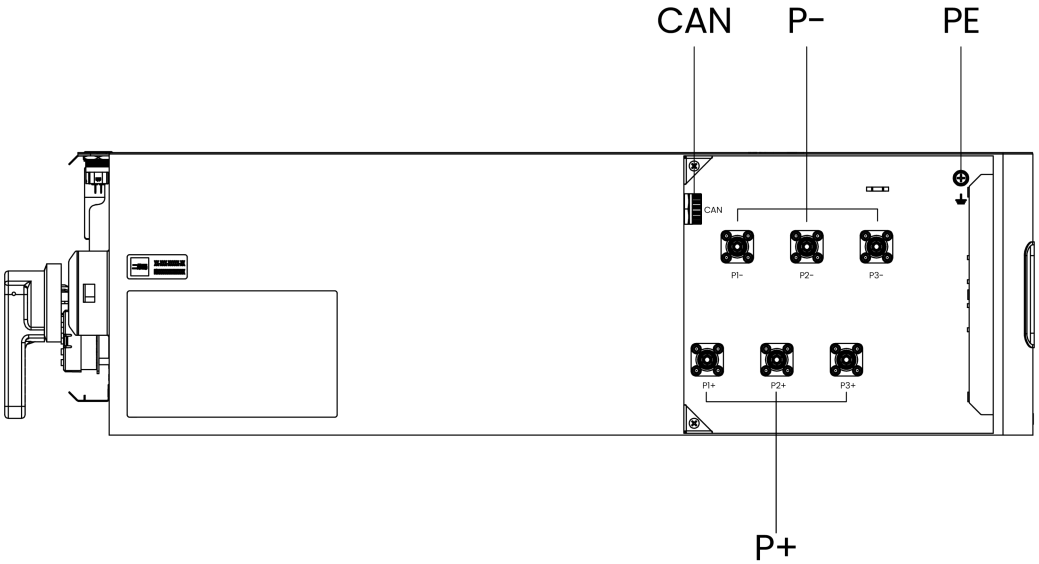

Interface	Description
CAN	Battery and inverter communication port
P+	High-Voltage Control Box positive terminal, connected to hybrid inverter's positive terminal
P-	High-Voltage Control Box negative terminal, connected to hybrid inverter's negative terminal
PE	Ground terminal, connected to the hybrid inverter

8. Installation

8.1 Items in the package

Please check if following items are including with the package

For High-Voltage Control Box

A

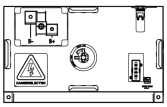

High-Voltage Control Box*1

B

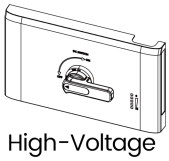

High-Voltage Control Box decorative cover*1

C

Cable ties*20

D

Quick Installation Guide*1

E

Fixing and grounding metals between battery packs*4

F

The positive terminal of the High-Voltage Control Box is connected to the copper bar*1

G

Power+ cable*3

H

Power- cable*3

I

Grounding cable*1

J

Communication cable (BMS-Inverter) (Only FOX PCS)*1

K

Mounting screw pack*10

For CQ16

L

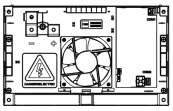

CQ16*1

M

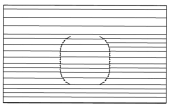

CQ16 decorative cover*1

N

Mounting screw pack*10

O

Fixing and grounding metals between battery packs*4

P

Series copper bar*1

Q

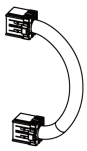

Communication cable between battery packs*1

Accessory package 1
For 1+4 System

R

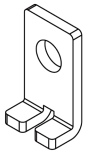

The front fixed sheet metal of the battery and base*2

S

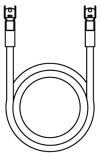

High-Voltage Control Box and battery negative connection cable*1

T

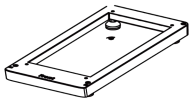

Base*1

Accessory package 2

U

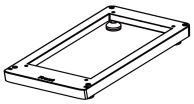

Base*4

Accessory package 3
For 1+15 System

V

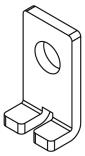

The front fixed sheet metal of the battery and base*8

W

Metal is fixed between the bases*3

X

Communication cable between battery packs*3

Y

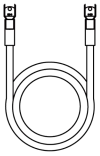

High-Voltage Control Box and battery negative connection cable*1

Z

The power cable between the two rows of batteries (Red)*3

8.2 Clearance

When multiple rows of batteries are stacked, please keep the distance between the bases at **50mm**.

Installation spacing of Single battery cluster

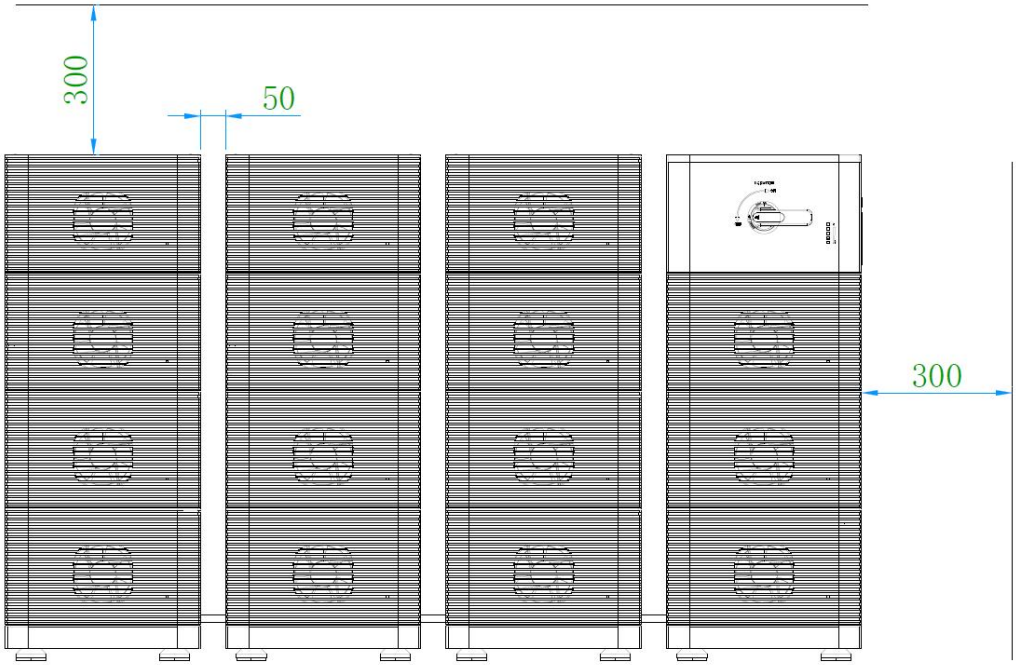

Installation spacing of three battery cluster

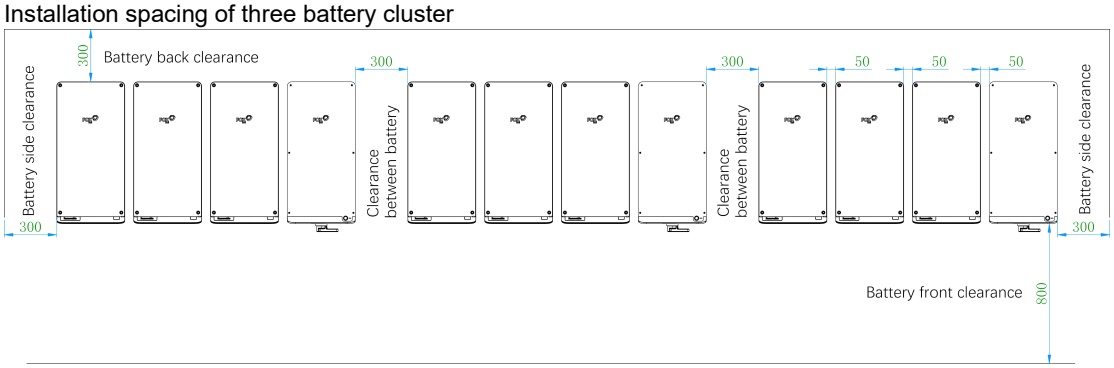

Note: The bases are fixed by sheet metal (**Item W**).

Note: To ensure proper operation and long battery life, please make sure to leave at least **300mm** of cooling space around the battery. Shading or insufficient space for heat dissipation will result in high battery temperatures, which may cause unplanned shutdowns and significantly shorten the service life of the battery.

8.3 Tools

The following tools will be required to install CQ16 and High-Voltage Control Box.

6mm Magnetic Phillips Screwdriver

Crimpers

Safety Shoes

Multimeter

Safety Gloves

Safety Glasses

Plier

Marker

Torque wrench

Spirit Level

Tape

8.4 Installation Steps

Step 1: Place the base(**Item T** or **Item U**) on the ground and adjust it to the level. After installing the footstand, use a track level bar to confirm the level.

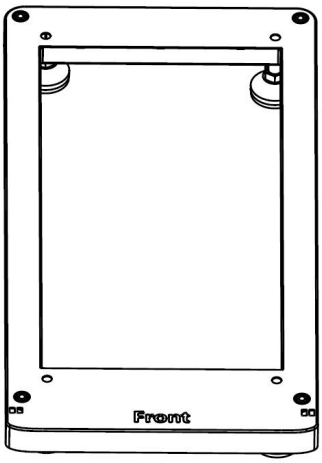

Step 2: Place the battery on the base. By moving the position of the battery pack, the raised sphere on the base will bounce up and restrict the movement of the battery pack.

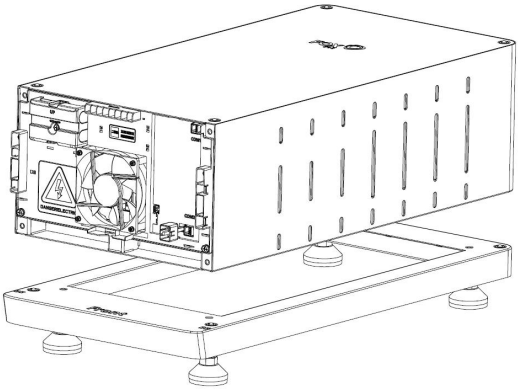

Step 3: Use metal fixing plates (**Item R** or **Item V**) to secure the battery pack and the base .
Fix the battery packs at the bottom of the two columns using metal fixing plates (**Item W**).

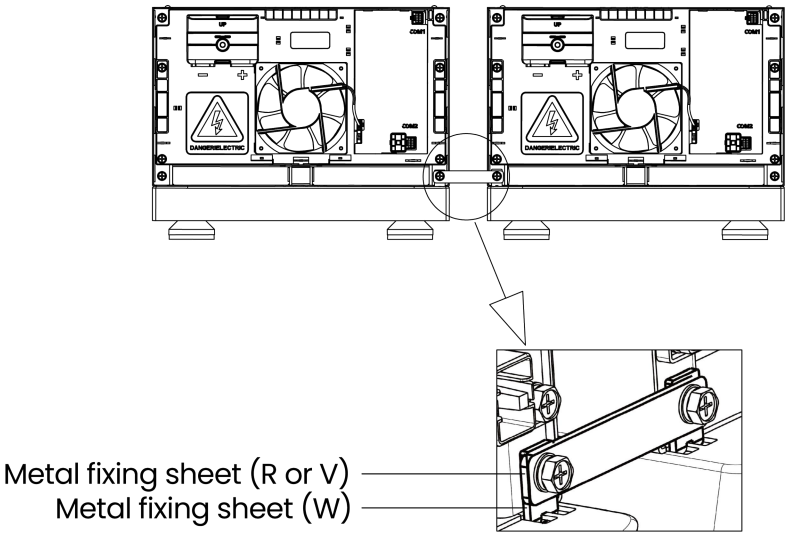

Note: When placing the base, it is necessary to ensure that the distance between the bases is **50mm**; otherwise, the metal fixing plates will not be able to connect.

Step 4: The upper and lower two battery packs are fixed with metal sheet fixing plates (**Item E** or **Item O**).

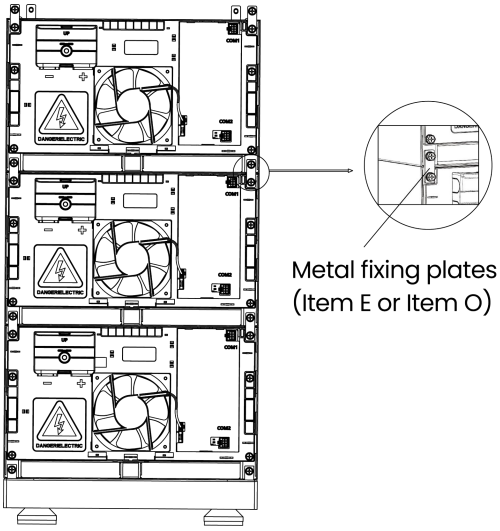

Note: A total of four metal fixing plates (**Item E** or **Item O**) are required between every two battery packs for fixation.

Step 5: Connect the metal fixing plates between all the batteries.

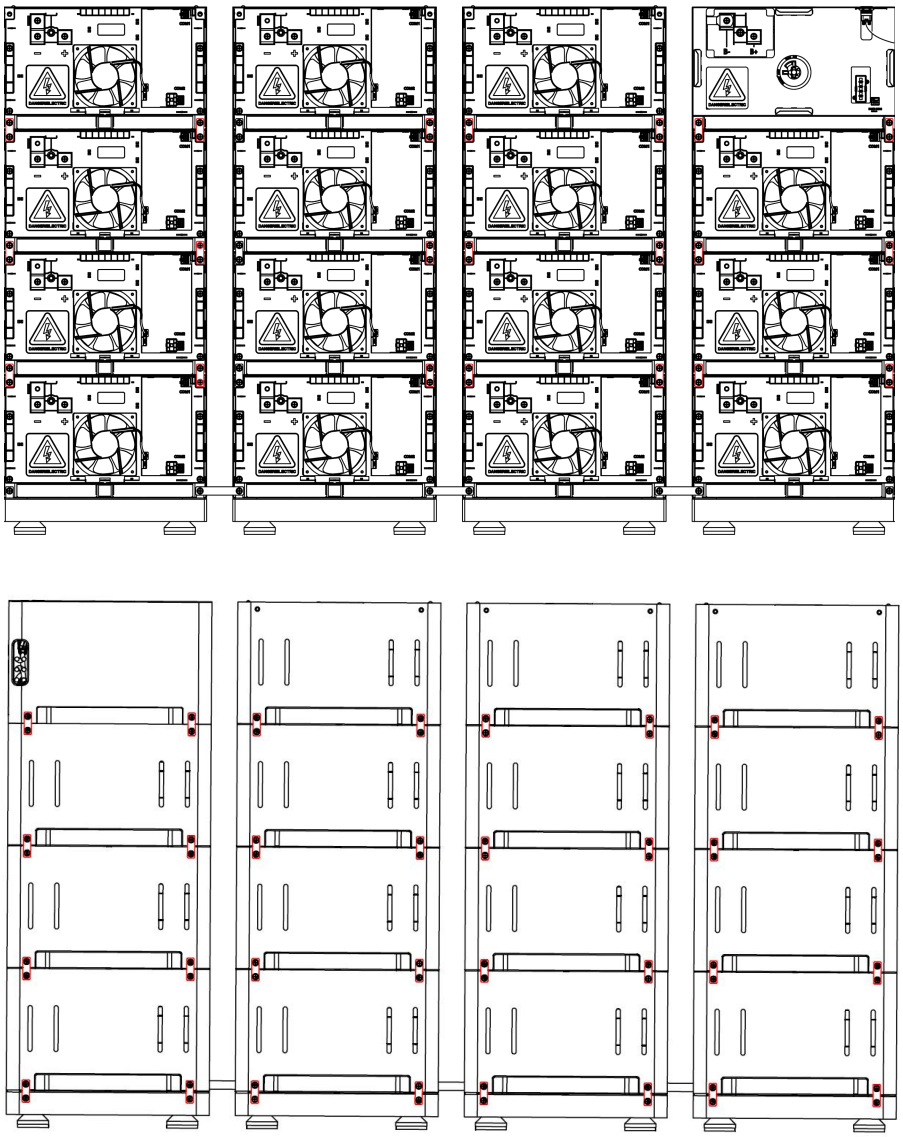

Note: The metal fixing plates have the function of grounding connection. Please connect all the metal fixing plates.The back of the battery also needs to be fixed.

Step 6: Battery cable installation.

a) The series copper bar between batteries is the (**Item P**) in the accessory.

b) The positive terminal connection copper bar between High-Voltage Control Box and CQ16 is (**Item F**).

c) The negative terminal connection cable between High-Voltage Control Box and CQ16 is (**Item S** or **Item Y**).

d) The power cable between the two rows of batteries is (**Item Z**).

The connection of the communication cable needs to confirm the direction. Connect the first battery "INCOM (white)" from the high-voltage box "OUTCOM (yellow)". The communication cable between other battery packs are connected in sequence from "OUTCOM" to "INCOM".

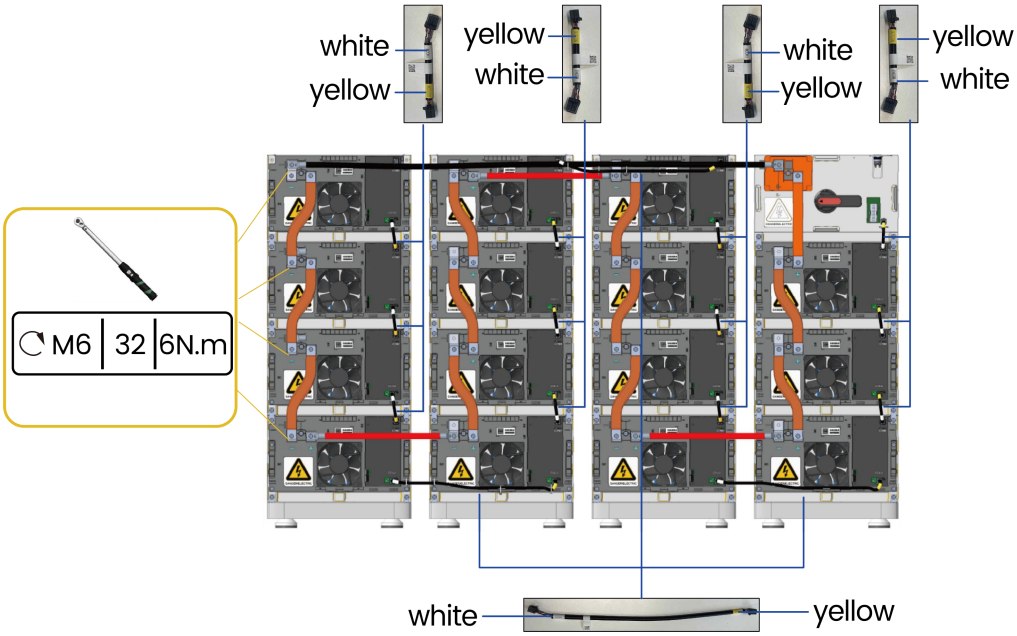

Note:When connecting cables, observe the installation diagram and pay attention to the direction of the communication cables. Otherwise, the products may not work properly due to incorrect cable installation. When connecting copper bar with high voltage, the work must be implemented by professional electrical operators with insulation gloves.

Note: All wiring harnesses and brads supplied by FOX

Step 7: Cable fixation
Use cable ties to fix the cable.

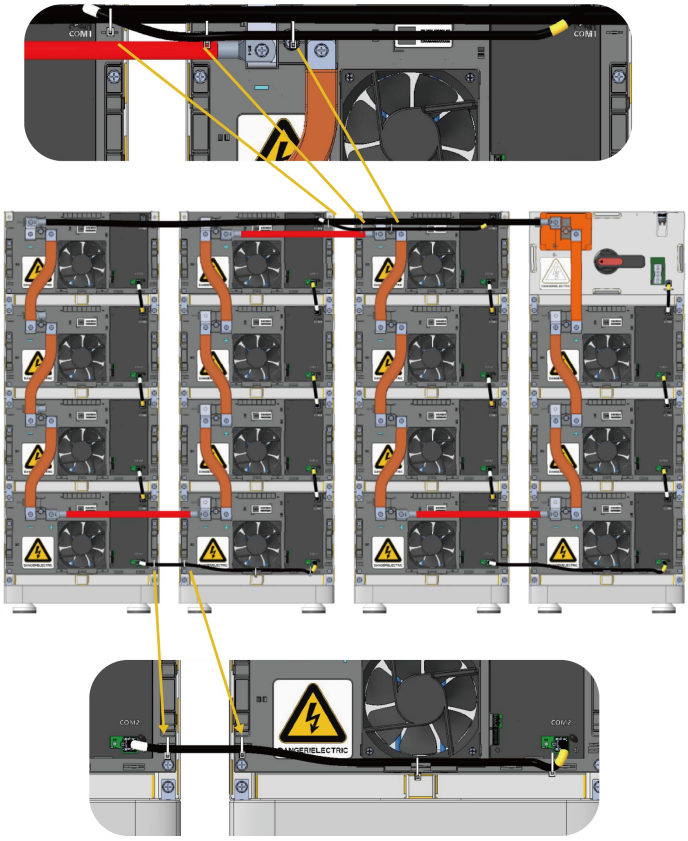

Step 8: Installation of decorative covers
Depending on the actual installation requirements, you can selectively remove the "Removable".

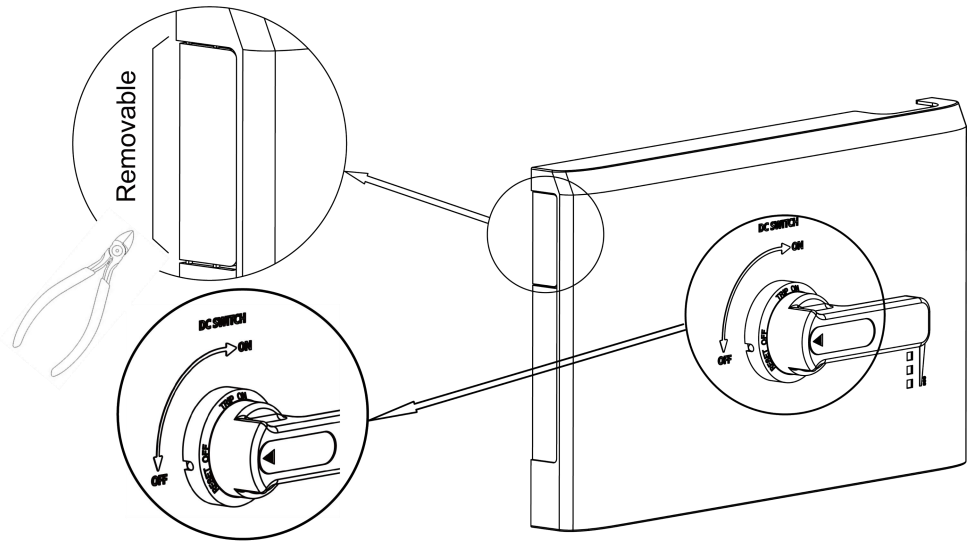

Note: Keep the handle pointed OFF when installing the cover.

Install the decorative covers of CQ16 and High-Voltage Control Box.

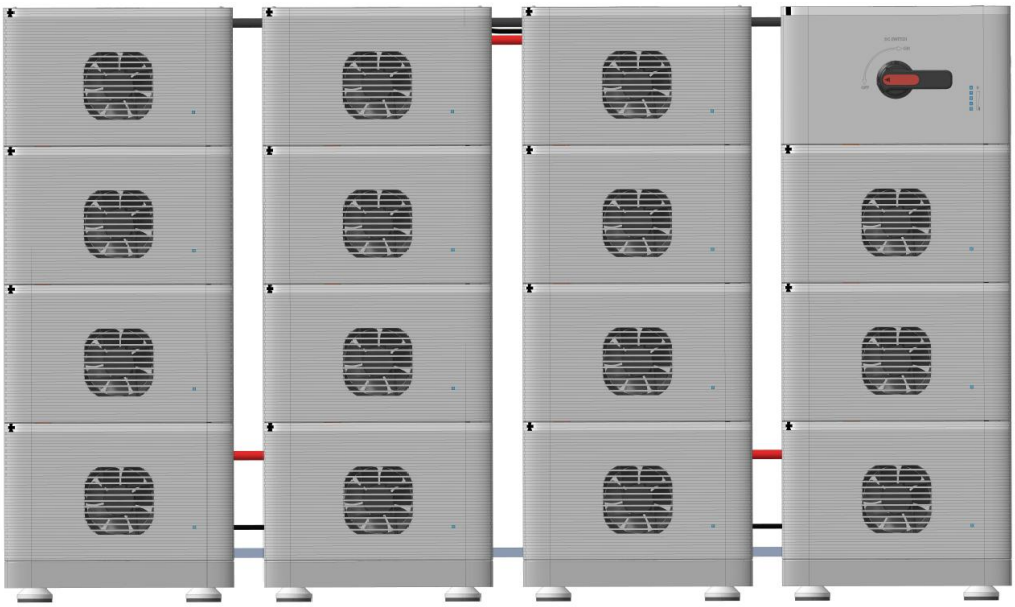

8.5 Communication and grounding cable connection

A: Insert the cable connector into BMS port at the bottom of inverter and screw it tightly.
The communication cable connecting the battery system and the inverter is (**Item J**).

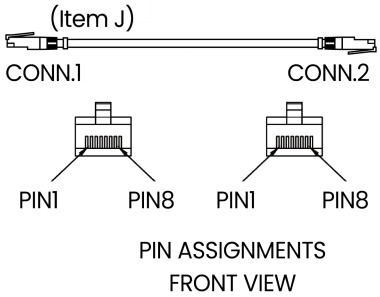

CONN.1 PIN	CONN.2 PIN
1	1
2	2
3	3
4	4
5	5
6	6
7	7
8	8

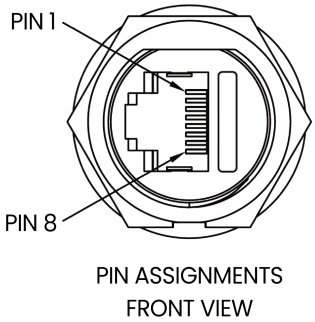

PIN	Function Definitions
1	A-START
2	GND
3	/
4	BMS-CANL
5	BMS-CANH
6	BMS-CANH
7	BMS-CANL
8	/

Note: See the user manual for details on the cable steps of the inverter.

B: Connect the grounding cable to ensure that all batteries are grounded. The cable method can be referred to as shown in the figure below.

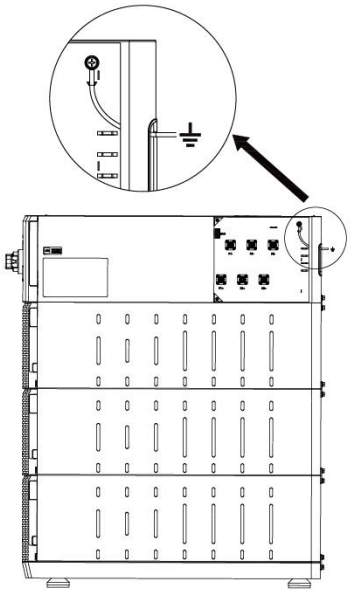

Note：
Make sure that the power cable connected to the battery is connected vertically and that the vertical length is greater than 30cm. If the cable is bent close to the terminals, it may cause poor line contact and result in burnt terminals.

8.6 System Operation

- When the grid connected system is started, the inverter should be turned on first to avoid the current pulse of the inverter increasing to the battery pack.
- All installation and operation must comply with local electrical standards.
- Check all power cables and communication cables carefully.

System Start Up:

When the inverter is connected to the PV and the grid and both are operating normally, turn on the battery DC Switch. Press the POWER switch and hold it for 3 seconds, then release. The Status LED is blinking green and indicates that the system is working normally.

System Shut Down:

Press and hold the POWER switch for at least 5 seconds until all of the LEDs (BMS Status LED and SOC LED) begin blinking. Once they start blinking, release the switch. The lights will automatically turn off after 5 seconds. Then, turn off the DC Switch.

System Black Start:

Under special circumstances when both PV and Grid power are out of order, the battery can be activated through the "Black Start" function. This means that our energy storage inverter and battery can continue to operate. The startup steps for Black Start are as follows:

- Turn on the DC Switch, press and hold the POWER switch for 3 seconds, then release.
- Press the POWER switch three times in succession within 4 seconds (Complete within 30 seconds after the battery system starts up).
- The Status LED remains solid green, indicating successful activation of Black Start mode.

Note:

Ensure correct battery-inverter connection prior to Black Start. No cable modifications during Black Start.

9. Commissioning

The operating status light on the right side of the battery pack shows its working status.

For CQ 16

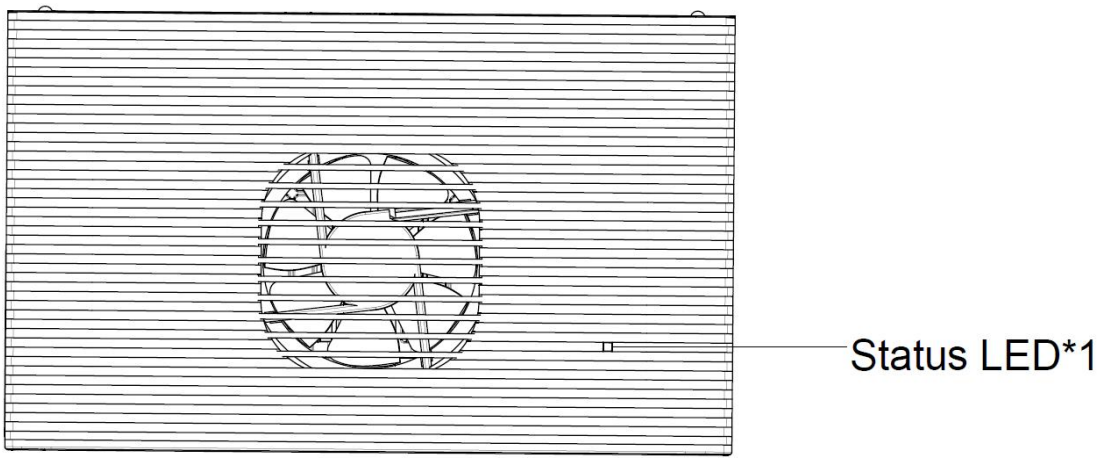

Green LED	Red LED	Batteries Status
On for 0.5s, Off for 0.5s	On for 0.5s, Off for 0.5s	Running in boot
On for 0.1s, Off for 0.1s	On for 0.1s, Off for 0.1s	Upgrading
On for 1s, Off for 1s	Off	Normal Working
Off	On for 1s, Off for 1s	Alarm

For High-Voltage Control Box

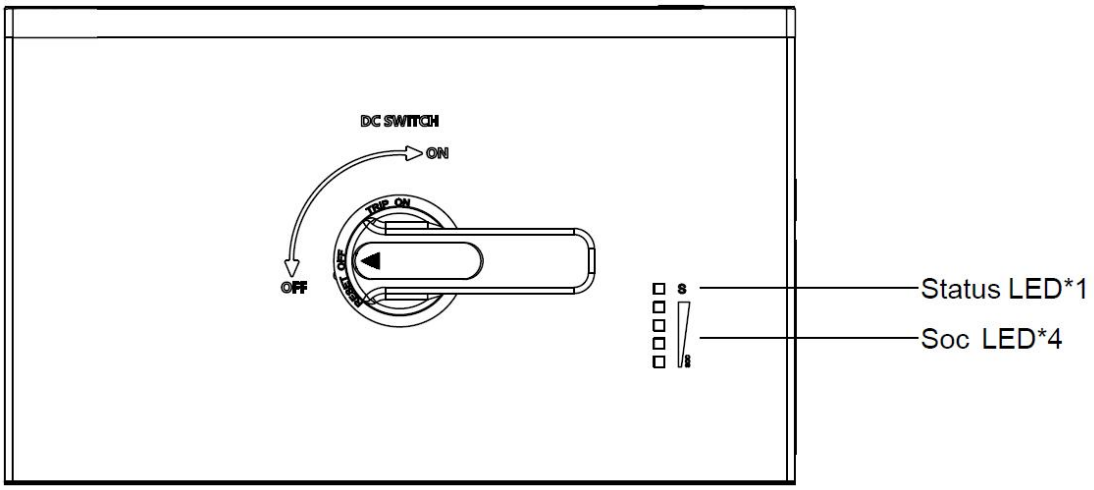

SOC	LED indication	Red	Green	LED SOC			
				LED-4	LED-3	LED-2	LED-1
Activate		Running water lamp					
Shut down		■	/	■	■	■	■

SOC	System Status	LED State	LED SOC			
=100%	Standby	■	●	●	●	●
100% > SOC >= 75%		■	●	●	●	●
75% > SOC >= 50%		■	/	●	●	●
50% > SOC >= 25%		■	/	/	●	●
25% > SOC >= 0%		■	/	/	/	●
=100%	Discharge	●	●	●	●	●
100% > SOC >= 75%		●	●	●	●	●
75% > SOC >= 50%		●	/	●	●	●
50% > SOC >= 25%		●	/	/	●	●
25% > SOC >= 0%		●	/	/	/	●
=100%	Charge	●	■	■	■	■
100% > SOC >= 75%		●	■	■	■	■
75% > SOC >= 50%		●	/	■	■	■
50% > SOC >= 25%		●	/	/	■	■
25% > SOC >= 0%		●	/	/	/	■

Fault	Red	Green	LED SOC			
			LED-4	LED-3	LED-2	LED-1
Under voltage fault	■	/	/	/	/	●
Over voltage fault	■	/	/	/	●	/
Over temperature fault	■	/	/	/	●	●
Under temperature fault	■	/	/	●	/	/
Discharge over current	■	/	/	●	/	●
Charge over current	■	/	/	●	●	/
Pre-Charge failed	■	/	●	/	/	●
AFE communication failed	■	/	●	/	●	●
Module addressing failed	■	/	●	●	/	/
BMU communication failed	■	/	●	●	●	/
PCS communication failed	■	/	●	●	●	●
HVB FUSE fault	●	/	/	/	/	●
Module FUSE fault	●	/	/	/	●	/
Power failed	●	/	/	/	●	●
Internal total voltage sampling failed	●	/	/	●	/	/
Temperature sampling failed	●	/	/	●	/	●
Relay adhesion	●	/	/	●	●	/
Relay not close	●	/	/	●	●	●
Relay drive failed	●	/	●	/	/	/
Single cell "0V" fault	●	/	●	/	/	●
Temperature high permanent failed	●	/	●	/	●	/
The single voltage high permanently failed	●	/	●	/	●	●
SOH low protection	●	/	●	●	/	/
AFE failed（UV/OV/UT/OT）	●	/	●	●	/	●
Shutdown failure	★	/	★	★	★	★
Other fault	●	/	●	●	●	●

Remark:

■: LED flash display (on: 0.5s, off: 0.5s)

●: LED on display

/：LED off display

★：LED flash display（on：0.3S，off：0.6S）

10. Exclusion

The warranty shall not cover the defects caused by normal wear and tear, inadequate maintenance, handling, storage faulty repair, modifications to the battery or pack by a third party other than Fox ESS or Fox ESS agent, failure to observe the product specification provided herein or improper use or installation, including but not limited to the following.

- Damage during transport or storage.
- Incorrect Installation of battery into pack or maintenance.
- Use of battery or pack in inappropriate environment.
- Improper, inadequate, or incorrect charge, discharge or production circuit other than stipulated herein.
- Incorrect use or inappropriate use.
- Insufficient ventilation.
- Ignoring applicable safety warnings and instructions.
- Altering or attempted repairs by unauthorized personnel.
- In case of force majeure (ex: lightning, storm, flood, fire, earthquake, etc.).
- There are no warranties-implied or express-other than those stipulated herein. Fox ESS or Fox ESS agent shall not be liable for any consequential or indirect damages arising or in connection with the product specification, battery or pack.

System Lock Function

The CQ battery system has a non-reset table function to stop operation when one or more cells in the battery system deviate from the operating region during operation. This feature shall not be a user reset table or allow for automatic reset. Please ask after sales for help.

11. Troubleshooting and Maintenance

11.1 Maintenance

1) It is recommended that the battery storage time is not more than 6 months.
2) For the first installation, the interval among manufacture dates of battery modules shall not exceed 3 months.
3) Regularly check whether the service environment of the battery meets the requirements, and the installation position should be far away from the heat source.
4) The battery module should be stored in an environment with a temperature range between -10°C~55°C, and charged regularly according to the table below with no more than 0.5 C(C-rate is a measure of the rate at which a battery is discharged relative to its maximum capacity) to the SOC of 50% after a long time of storage.

Storage environment temperature	Relative humidity of the storage environment	Storage time	SOC
Below -10°C	/	Not allowed	/
-10~0°C	10%~90%	≤ 1 months	20%≤SOC≤50%
0~35°C	10%~90%	≤ 6 months	20%≤SOC≤50%
35~55°C	10%~90%	≤ 1 months	20%≤SOC≤50%
Above 55°C	/	Not allowed	/

NOTICE
● If the battery is stored over one year, 5%~8% of the capacity may lose irreversibly.

5) Every year after installation. The connection of power connector, grounding point, power cable and screw are suggested to be checked. Make sure there is no loose, no broken, no corrosion at connection point. Check the installation environment such as dust, water, insect etc.

11.2 Storage with Low SOC

After the product is powered off, static power consumption and self-discharge loss may occur in internal modules. Therefore, charge batteries in a timely manner and do not store the product in low SOC. Otherwise, the product may be damaged due to over discharge, and battery modules need to be replaced.

Storage in low SOC may occur in the following scenarios:

- The DC Switch on the power control module is OFF.
- The power cables or signal cables are not connected.
- The batteries cannot be charged due to a system fault after discharge.
- The batteries cannot be charged due to incorrect configurations in the system.
- The batteries cannot be charged due to no PV input and long-term mains failure.

Regardless of scenarios, the batteries must be charged within the longest interval corresponding to the SOC when the batteries are powered off. If the batteries are not charged within the specified interval, they may be damaged due to over discharge.

Storage environment temperature	Power-Off SOC Before Storage	Maximum Charge Interval
0~35°C	0% ⩽ SOC < 5%	7 days

Note: When the battery SOC decreases to 0%, charge the batteries within seven days. Permanent battery faults caused by delayed charge due to customer reasons are beyond the warranty scope.

11.3 Troubleshooting

When the LED of the High-Voltage Control Box on the panel is flashing or normally on, it does not mean that the battery is abnormal, it may be just an alarm or protection. Please check the “Fault status indicated by indicator” in Chapter 9 for the detailed faulty definition before any trouble-shooting steps. In general, the alarm indication is normal without manual intervention. When the alarm triggering state is removed, the battery will automatically return to normal use.

- Problem determination based on the following points

1) Whether the status LED light on the High-Voltage Control Box is on.
2) Whether the battery system can be communicated with inverter.
3) Whether the battery can be output voltage or not.

- Preliminary determination steps

Battery system cannot work, When the DC Switch is turned on and the POWER switch is held down for 3 seconds, the LED doesn’t light up or flash, please consider contact the local distributor.

1) The status LED of the High-Voltage Control Box is normal, but it cannot charge and discharge. Observe the display screen of inverter and there is no SOC. Please check whether the communication between BMS to inverter is well connected. If the connection is good, please replace communication cable. If the SOC is still not visible on the inverter display screen, please contact the local distributor.
2) After the battery system is powered on, if you can see the alarm information on the LED and inverter display screen at the same time, please contact the local distributor.

The copyright of this manual belongs to FOXESS CO., LTD. Any corporation or individual should not plagiarize, partially or fully copy (including software, etc.), and no reproduction or distribution of it in any form or by any means is permitted. All rights reserved.

FOXESS CO., LTD.

Add: No.939, Jinhai Third Road, New Airport Industry Area, Longwan District, Wenzhou, Zhejiang, China

Tel: 0510- 68092998

Web: WWW.FOX-ESS.COM

V1.1.1

10-500-10434-04