Gen 3 Wall Connector Manual

Type 2 Handle

Important Safety Information..... 2
Product Specifications.....5
Wall Connector Label.....6
Power Supply Options..... 7
Circuit Breaker Rating / Maximum Output.....
.....10
Using Wall Connector..... 12
Features..... 13
Connectivity.....13
Hosted Access Point.....13
Local Network.....13
Residual Current Device (RCD).....14
Ground Monitor Interrupter.....14
Power Outages..... 15
Firmware Updates..... 15
Thermal Monitoring.....15
Wall Connector External Components.....16
Wall Connector Internal Components..... 17
In the Box..... 18
Tools..... 19
Installation Considerations..... 20
Installation Steps..... 23
STEPS 1, 2, 3: Preparing and Mounting the Wirebox...
..... 23
STEP 4: Sizing and Routing Conductor Wires.....25
STEP 5: Stripping and Securing Wires in Wirebox
Terminals..... 26
STEP 6: Securing Main Unit to Wirebox.....28
Commissioning Procedure.....29
Wall Connector LEDs..... 31
Light Codes..... 31
Error Codes..... 32
Warranty Information..... 33
Limits of Liability.....34
Dispute Resolution.....35
UK Earthing Application Note.....38

IMPORTANT SAFETY INFORMATION

Read all instructions before using this product. Save these instructions. Wall Connector features built-in RCD Type A + DC 6mA.

This manual contains important instructions for the Tesla Gen 3 Wall Connector that shall be followed during installation, operation, and maintenance. Please review all warnings and cautions before installing and using the Wall Connector.

WARNING: When using electric products, basic precautions should always be followed, including the following.

INSTRUCTIONS RELATING TO RISK OF FIRE OR ELECTRIC SHOCK

WARNING: Do not install or use the Wall Connector near flammable, explosive, harsh, or combustible materials, chemicals, or vapors.

WARNING: Turn off power at the circuit breaker before installing or cleaning the Wall Connector.

WARNINGS

WARNING: This device should be supervised when used around children.

WARNING: The Wall Connector must be earthed through a permanent wiring system or an equipment-earthing conductor.

WARNING: Use the Wall Connector only within the specified operating parameters.

WARNING: Never spray water or any other liquid directly at the wall mounted control box. Never spray any liquid onto the charge handle or submerge the charge handle in liquid. Store the charge handle in the dock to prevent unnecessary exposure to contamination or moisture.

WARNING: Do not use the Wall Connector if it is defective, appears cracked, frayed, broken, or otherwise damaged, or fails to operate.

WARNING: Do not use the Wall Connector if the flexible power cord or cable is frayed, broken, or otherwise damaged, or fails to operate.

WARNING: Do not attempt to disassemble, repair, tamper with, or modify the Wall Connector. The Wall Connector is not user serviceable. Contact Tesla for any repairs or modification.

WARNING: When transporting the Wall Connector, handle with care. Do not subject it to strong force or impact or pull, twist, tangle, drag, or step on the Wall Connector, to prevent damage to it or any components.

WARNING: Do not touch the Wall Connector's end terminals with fingers or sharp metallic objects, such as wire, tools, or needles.

IMPORTANT SAFETY INFORMATION

WARNING: Do not insert fingers or foreign objects into any part of the Wall Connector.

WARNING: Do not forcefully fold or apply pressure to any part of the Wall Connector or damage it with sharp objects.

WARNING: Use of the Wall Connector may affect or impair the operation of any medical or implantable electronic devices, such as an implantable cardiac pacemaker or an implantable cardioverter defibrillator. Check with your electronic device manufacturer concerning the effects that charging may have on such electronic devices before using the Wall Connector.

CAUTIONS

CAUTION: Do not use private power generators as a power source for charging.

CAUTION: Incorrect installation and testing of the Wall Connector could potentially damage the vehicle's battery, components, and/or the Wall Connector itself. Any resulting damage is excluded from the New Vehicle Limited Warranty and the Charging Equipment Limited Warranty.

CAUTION: Do not operate the Wall Connector in temperatures outside its operating range of -30˚ C to 50˚ C (-22˚ F to 122˚ F).

CAUTION: Wall Connector should only be installed by personnel who are trained and qualified to work on electrical systems.

CAUTION: Ensure that Wall Connector is within storage temperature when moving, transporting, or storing.

PRODUCT SPECIFICATIONS

This manual applies to Wall Connectors identified by part number 1529455-**-*.

Voltage and Wiring	1-phase 230 V L-N 3-phase 230 V L-L 3-phase 400 V L-L
Current Output Range	Maximum 32 A (adjustable by installer)
Terminal Blocks	Stranded: 4-25 mm^2, copper only Solid: 1.5-20 mm^2, copper only
Supported Earthing Scheme	TN/TT/IT
Frequency	50/60 Hz
Cable Length	7.3 m (24 ft) or 2.6 m (8.5 ft)
Wall Connector Dimensions	Height: 345 mm (13.6 in) Width: 155 mm (6.1 in) Depth: 110 mm (4.3 in)
Wire Box Bracket Dimensions	Height: 250 mm (9.8 in) Width: 120 mm (4.7 in) Depth: 50 mm (2.0 in)
Weight (including wirebox)	6.8 kg (15 lb)
Operating Temperature	-30˚C to 50˚C (-22˚F to 122˚F)
Storage Temperature	-40˚C to 85˚C (-40˚F to 185˚F)
Enclosure Rating	IP 55
Ventilation	Not required
Means of Disconnect	External branch circuit breaker
Residual Current Detection	Integrated (Type A + DC 6 mA)
Wi-Fi	2.4 GHz, 802.11b/g/n
Certifications	CE, IEC 61851-1 CB

WALL CONNECTOR LABEL

Each Wall Connector has a label on the exterior side with information that is unique to the product, including:

- TPN: Tesla Part Number
- TSN: Tesla Serial Number
- Input: Max input power
- Output: Max output power
- MAC: Unique MAC address assigned to the Wall Connector
- SSID: Unique Wi-Fi access point assigned to the Wall Connector

POWER SUPPLY OPTIONS

For basic operation, Wall Connector requires an electrical connection to Line 1, Neutral, and Protective Earth (PE) terminals. Connection to Line 2 and Line 3 terminals is supported for some grid types.

CAUTION: Wall Connector supports 230 V L-N (+/- 10%). Mis-wiring the neutral terminal with >264V to PE can damage Wall connector

Wall Connector can operate on a three-phase power supply or a single-phase power supply.

Table 1. Most Common Installation Option

Wiring Configuration Option for Five Wires: Line 1, Line 2, Line 3, Neutral, PE		
	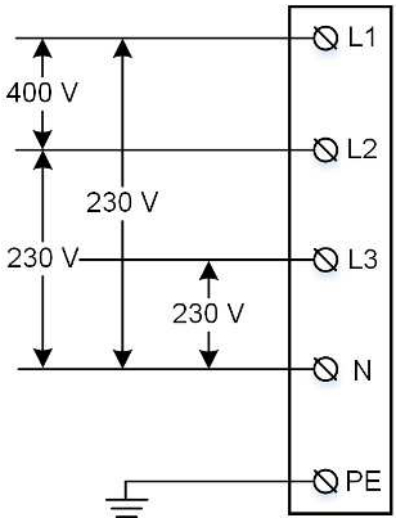	Grid type options: • 400 V 3-phase wye **CAUTION:** Double check N connection is 230 V L to N at terminals of wirebox before energizing.

NOTE: Blue is used as the IEC standard for neutral. Some markets may use other colors to symbolize neutral and line conductors.

Table 2. 2nd Most Common Installation Option

Wiring Configuration Option for Three Wires: Line 1, Neutral, PE		
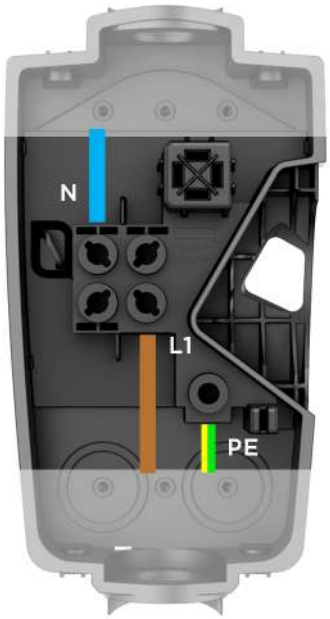	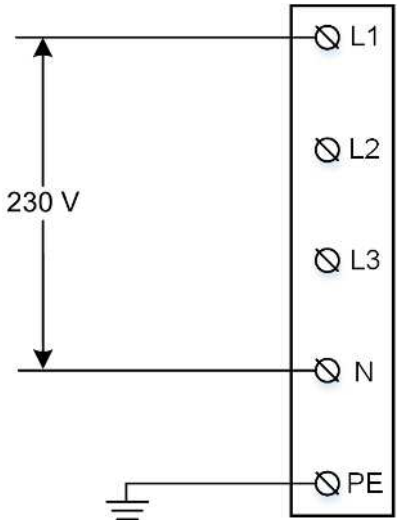	Grid type options: • 230 V Line to Neutral • 230 V Line to Line **NOTE:** For 230V Line to Line connections, without a Neutral, connect one Line from the grid to the Neutral terminal of the wirebox **CAUTION:** Double check N connection is 230 V L to N at terminals of wirebox before energizing.

Table 3. Least Common, but Supported Installation Option

Wiring Configuration Option for Four Wires: Line 1, Line 2, Neutral, PE		
 *When connecting to a 230 V delta no neutral grid, land one of the line connections in the neutral terminal of the wirebox.	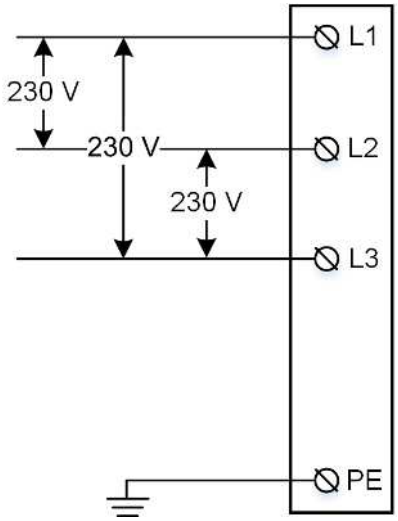 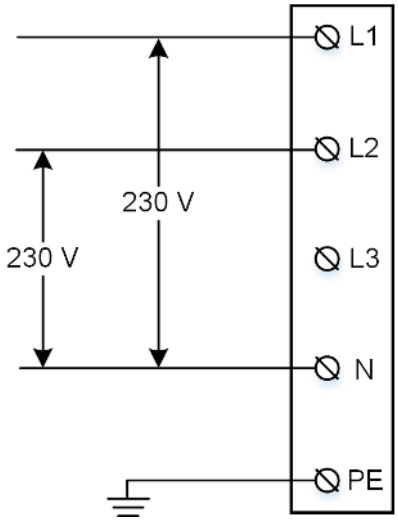	Grid type options: • Delta 230 V Line to Line • Open wye with 230 V Line to Neutral • Split phase 230 V Line to Neutral **NOTE:** In the case of a Delta grid connection, land one of the line conductors from the grid in the neutral terminal of Wall Connector wirebox. **NOTE:** The conductor with lowest voltage to Protective Earth (PE) should be connected to the Neutral terminal. **CAUTION:** Double check N connection is 230 V L to N at terminals of wirebox before energizing.

CIRCUIT BREAKER RATING / MAXIMUM OUTPUT

Power Output

For the best charge rate, install a circuit breaker to match the grid type and desired current output. Wall Connector features built-in RCD Type A + DC 6mA.

Maximum current output (amps) can be programmed by the installer as part of the commissioning process. Any amperage between 6 A and 32 A can be selected. Estimate power output for various grid connections below:

NOTE: Some Tesla vehicles may draw less current than the max output of Wall Connector. Actual charging rate depends on Wall Connector output and onboard charger in the vehicle. See Tesla website for vehicle specifications.

Maximum current output (A)	230 V Single-phase power output (kW)	230 V Three-phase delta power output (kW)		400 V Three-phase power output (kW)
		Model S/X	Model 3/Y	
32	7.4	8.5	11	22.1
25	5.8	6.6	10	17.3
20	4.6	5.3	8	13.8
16	3.7	4.2	6.4	11
13	3	3.5	5.2	9
10	2.3	2.7	4	6.9
8	1.8	2.1	3.2	5.5
6	1.4	1.6	2.4	4.1

NOTE: Refer to local regulations regarding any disconnect requirements.

NOTE: See *Commissioning Procedure* on page 29 for details on how to set maximum amperage.

Branch Circuit Conductors and Earth Wire

- Refer to local electrical code to select correct conductors and earth wire size that are suitable for the chosen circuit breaker.
- Wall Connector wirebox terminals can accept stranded wire sized between 4 mm^2 to 25 mm^2, or solid wire 1.5 mm^2 to 25 mm^2. Installer is responsible for selecting a wire size that will be compliant with local code, possibly taking into account amperage, distance and other site conditions.

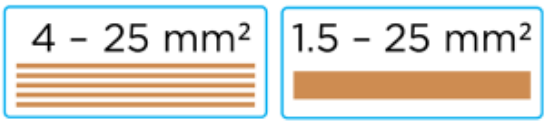

NOTE: If using stranded wiring smaller than 4 mm^2, use a correctly sized ferrule so it can be securely terminated.

- For sites with multiple Wall Connectors, each Wall Connector must have its own branch circuit and dedicated circuit breaker.
- For outdoor installations, use watertight fittings when securing feeder wires to the wirebox.
- For this installation guide, IEC standard colors are used for L1, L2, L3, Neutral, and PE. Some regions may use other standardized colors.

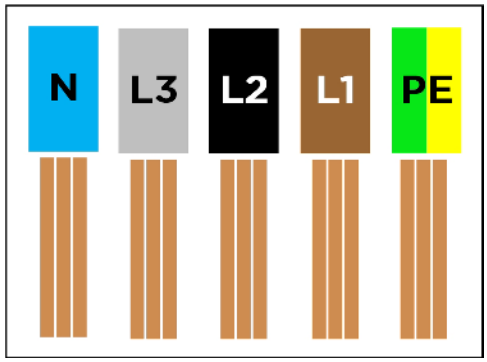

Earth Connections

Wall Connector must have an earth path back to the main equipment earthing point on site. Without a proper earth connection, the Wall Connector will not charge a vehicle during an earth assurance test. Equipment-earth conductor must be run with the circuit conductors and connected to the equipment-earth terminal in the wirebox. Install a earth wire sized according to local electrical code.

NOTE: To support TT and IT grids, earth assurance can be disabled as part of the commissioning process. Earth assurance must always be enabled for TN grids.

Additional requirements apply to UK properties fed from a TN-C-S supply. In most scenarios, these properties will require an external device which provides PEN fault detection and isolation in accordance with BS 7671. It is the responsibility of the installer to ensure that the requirements of BS7671 are met - please refer to Tesla's application note at the end of this manual that discusses this topic in more detail.

NOTE: The use of an dedicated earth rod for the EVSE will not generally be a practical solution to meet the BS 7671 requirements

USING WALL CONNECTOR

1. Open the vehicle charge port by pressing the button on the charge handle, pressing on the charge port door, using the mobile app, using the vehicle touchscreen, or by pressing and holding the trunk button on the keyfob.
2. Insert the charge handle into the vehicle charge port.
3. Check the vehicle controls to verify charging.
4. To remove the charge handle from the vehicle, press and hold the button on the handle to unlock the charge port.

   NOTE: The vehicle must be unlocked for the charge handle to be removable.

5. Remove the charge handle from the vehicle charge port.
6. Wrap the charge cable counter-clockwise around the Wall Connector and insert the charge handle into the holster.

FEATURES

Connectivity

Wall Connector is equipped with Wi-Fi to communicate with local site routers, vehicles, mobile devices, other Wall Connectors, and other Tesla products.

Hosted Access Point

Wall Connector hosts a WPA2 password-secured, 2.4 GHz, 802.11 Wi-Fi access point network to facilitate commissioning and connecting to other devices.

A unique SSID Wi-Fi network name and WPA2 password for connecting to the Wall Connector are printed on a label at the rear of the main unit, as well as on the front cover of the Quickstart Guide included in the box.

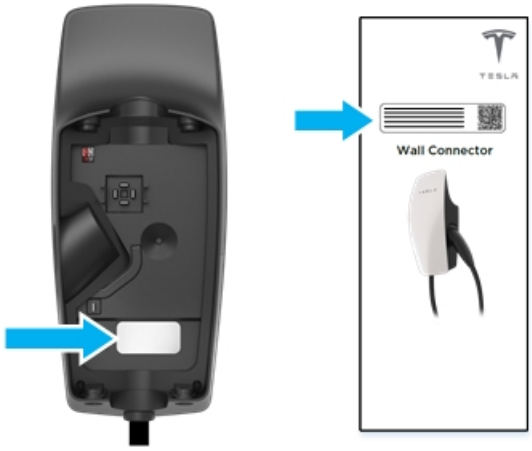

Local Network

Connecting Wall Connector to a local Wi-Fi network enables it to receive over-the-air firmware updates, remote diagnostics access, and usage data tracking capability. A Wi-Fi connection is required for sites that utilize authentication, billing, and other property management features.

NOTE: Some features will be added over time.

Wall Connector only supports WPA2/3-secured, 2.4 GHz, 802.11 infrastructure mode networks.

NOTE: Hidden networks are supported.

NOTE: WPA enterprise will be supported in a future firmware update.

NOTE: Property management features will be enabled via future firmware updates.

Residual Current Device (RCD)

Wall Connector features built-in RCD Type A + DC 6mA. The benefit of this protection is that RCD Type B are not required when installing Gen 3 Wall Connectors, consult local regulations on the type of breaker required.

AC earth fault interruption automatically detects an AC current mismatch between power delivery conductors that would indicate that current is flowing through the earth conductor. AC fault protection will trip at 20 mA.

DC earth fault interruption automatically detects DC leakage through earth. DC fault protection will trip at 6 mA.

User interaction such as pressing the cable button or unplugging from vehicle is required to clear this fault. If fault continues, consult with an electrician to review power supply.

Ground Monitor Interrupter

The ground monitor interrupter allows the installer to select different early monitor options. Wall Connector continuously checks for the presence of a safe earth connection and automatically recovers from faults. Earth assurance operates by injecting a small amount of current into the earth conductor in order to measure the impedance between line and earth. If high impedance is detected, the Wall Connector will lock out charging and display a error code of two (2) red blinks. See *Error Codes* on page 32 for a full list of error codes.

For earth assurance to operate on TN grids, one leg of the distribution transformer must be earth-bonded (Neutral). Earth bond should only occur at one location in a site's electrical system.

Wall Connector earth assurance may be adjusted in countries with TT or IT grid configurations.

The Earth Monitor Interrupter feature monitors the Wall Connector earth connection. Select the correct option based on the installation's earthing system and earth impedance.

Depending on country, three options are available:

- **Enable**: Earth connection will be monitored and a high detected earth resistance will disable the Wall Connector. This is the preferred setting to provide protection, and should be selected where earth connection is expected to be strong (as in the case on TN networks and most TT networks), and where required by regulation.
- **Disabled**: Earth connection will not be monitored. This should be selected where the earth connection is not made (as is the case for IT networks), or where the current induced by this check would be problematic (as is the case on some TT networks with sensitive residual-current devices).

NOTE: Earth Monitoring is always enabled for installations in North America.

Temporary problems such as earth faults or utility power surges are resolved automatically.

Power Outages

If there is a power outage while Wall Connector is charging a vehicle, charging will automatically resume within 1 to 3 minutes after power restoration. The Wall Connector will display a solid blue light on the faceplate to indicate that it is communicating with the vehicle and waiting to resume charging. Alternatively, pressing the button on the charge handle after power restoration will cause Wall Connector to resume charging immediately.

Firmware Updates

Firmware updates will be automatically applied to the Wall Connector to improve the user experience and introduce new features. Connect Wall Connector to Wi-Fi for access to the most recent firmware update. See *Commissioning Procedure* on page 29.

Thermal Monitoring

Wall Connector actively monitors temperatures in multiple locations while charging to ensure stability of the charge session. Temperature sensors are located at the relays, microcontroller, charge handle, and rear of the main unit to monitor the temperature of the terminals in the wirebox.

In warmer conditions, Wall Connector may reduce current and charge speed to protect itself. When this happens, the light bar on the faceplate will continue to display the “streaming green” and a blink code of three red flashes to indicate that charging has been reduced due to high temperatures. If heat continues to rise, Wall Connector will stop charging and display a blink code of three red flashes.

NOTE: See *Error Codes* on page 32 for full list of error codes.

For optimal performance, install Wall Connectors in areas where ambient temperature will remain below 50˚C (122˚F). In rare circumstances, Wall Connector may begin reducing amperage at 35˚C (95˚F) ambient temperatures. Adjustments to amperage are automatic and do not require user input; Wall Connector will return to starting current when temperatures are reduced.

WALL CONNECTOR EXTERNAL COMPONENTS

"Wall Connector" refers to the product as a whole.

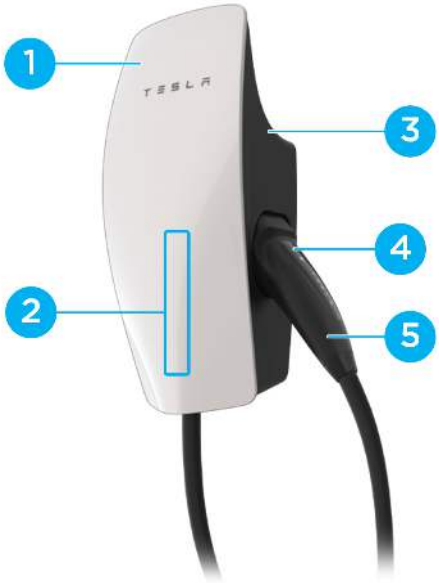

1. Faceplate
2. Light bar (vertical)
3. Main unit
4. Charge handle button
5. Charge handle

WALL CONNECTOR INTERNAL COMPONENTS

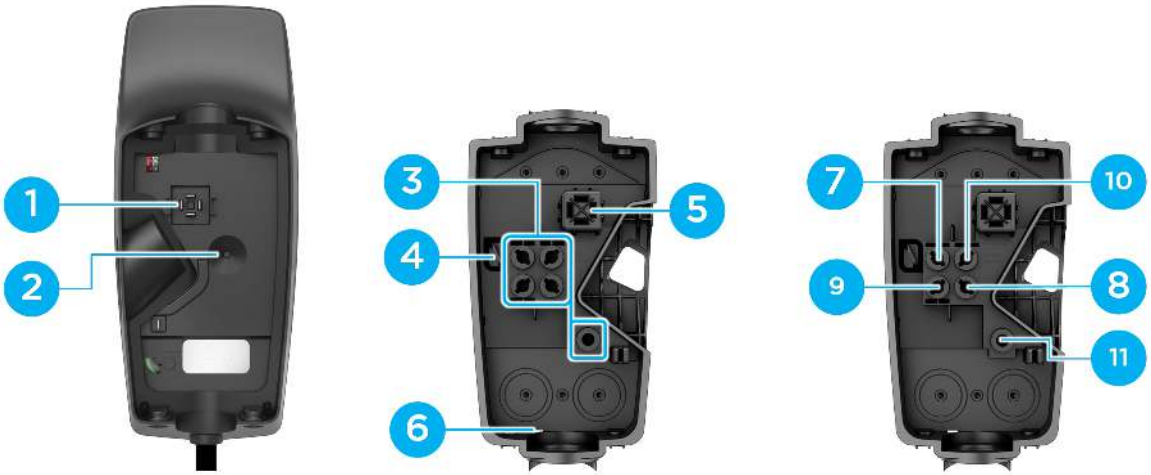

1. Contact blades
2. Temperature sensor
3. Conductor terminals
4. Zip tie anchor
5. Sliding contacts
6. Wirebox drainage opening (enables protection)
7. Neutral
8. Line 1
9. Line 2
10. Line 3
11. Earth

IN THE BOX

Main Unit	Wirebox	Wirebox Mounting Template	Hex Bit (4 mm)
Zip tie (x1)	Wall Connector-to-Wirebox Fastener (x4)	Wirebox-to-Wall Fastener (x2) 4.0 x 50 mm (PZ2) (#8 x 2 in)	Quickstart Guide (contains sticker with SSID network name and unique password)

NOTE: The hex bit, zip tie, and fasteners are located in a plastic bag inside the wirebox, which comes attached to the main unit of the Wall Connector.

NOTE: Wall plugs are not included. If installing in concrete or other like materials, use 6 mm wall plugs.

TOOLS

Required Tools

NOTE: Drill bit sizes assume wood mounting surfaces. If installing on concrete or other masonry, consult with an electrician for optimal pilot hole sizes.

Torque Driver (5.6 Nm, 50 lbf . in)	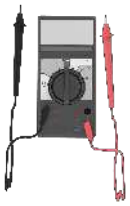 Multimeter	Stud Finder (If installing on wood walls)	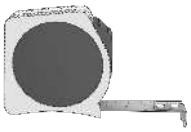 Tape Measure
Wire Stripper	Drill Bit, 5 mm (3/16 in) (If installing on wood walls)	Drill Bit, 2.5 mm (3/32 in) (If installing on wood walls)	Bit Driver
Level	Smartphone (with Wi-Fi)	Power Drill	

Optional Tools

Step Bit, 29 mm (1-1/8 in)	Step Bit, 35 mm (1-3/8 in)	Computer (with Wi-Fi)

INSTALLATION CONSIDERATIONS

Wall Connector may be installed on any flat, vertical surface capable of supporting its weight (e.g. wall, pedestal, etc.). Wall Connector (wirebox, faceplate, and long cable) weighs 6.8 kg (15 lb).

Choosing Location

Install Wall Connector in a location that allows the charge cable to reach the vehicle charge port without putting strain on the cable.

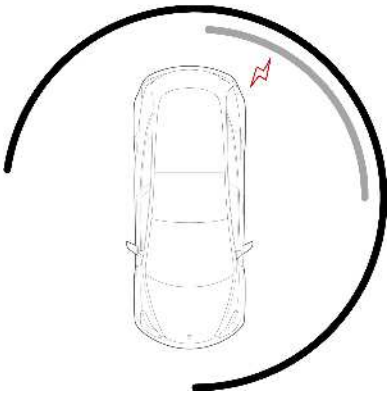

- Dark gray: Recommended installation area for Wall Connectors with 7.3 m (24 ft) cable
- Light gray: Recommended installation area for Wall Connectors with 2.6 m (8.5 ft) cable

Install Wall Connector in a location with ample clearance on all sides to allow the charge cable to loop around the unit and the charge handle to comfortably land in the side dock.

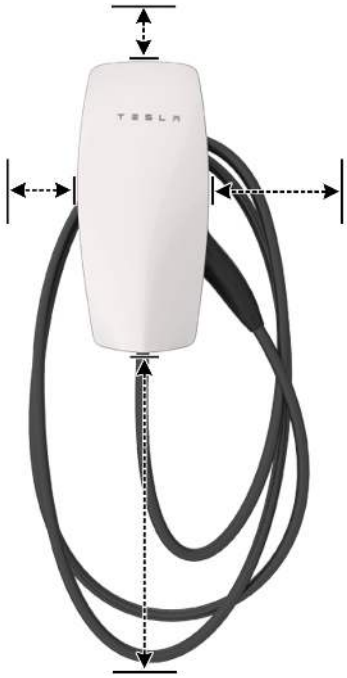

NOTE: If constrained by space, a cable organizer can be installed near the Wall Connector.

Choosing Height

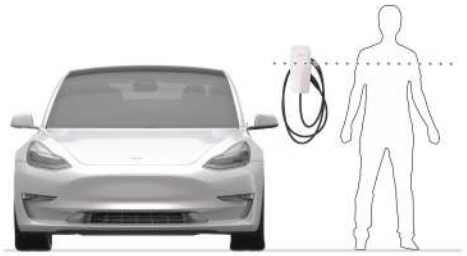

- Maximum height (indoor and outdoor): 1.52 m (60 in)
- Recommended height: ~1.15 m (~45 in)
- Minimum outdoor height: 0.6 m (24 in)
- Minimum indoor height: 0.45 m (18 in)

Maximizing Wi-Fi Signal Reception

Wall Connectors should be connected to a local Wi-Fi network for optimal functionality. For maximum signal reception, avoid installing Wall Connector on opposite sides of concrete, masonry, metal studs, and other physical obstructions that could impede Wi-Fi signal reception.

NOTE: If a mobile device is able to connect to local Wi-Fi at a given location, it is a good indication that Wall Connector will also be able to connect.

Wire Entry Options

Wall Connector's wirebox has multiple wire entry options. Choose one entry path and follow installation instructions based on chosen entry path.

1. Top entry location
2. Rear entry locations (left or right)
3. Bottom entry location

INSTALLATION STEPS

STEPS 1, 2, 3: Preparing and Mounting the Wirebox

This procedure has 4 different variations depending on the chosen wire entry option, but the general order of steps will be the same for all wire entry options:

1. Drill 5 mm holes into the wirebox*. If wiring for rear entry, use step bit.
2. Use cardboard template to plan or drill pilot holes into mounting surface*. A 2.5 mm pilot hole is recommended for most surfaces.

   NOTE: Drill larger pilot holes that can accommodate 6 mm wall plugs if installing on concrete, masonry, or similar materials.

   NOTE: Installer can adjust pilot hole size based on mounting surface

   NOTE: Use a level to ensure that the template is completely level.

3. Attach wirebox to mounting surface using included fasteners, which include an integrated sealing washer. The fastener head is compatible with both #2 Phillips or #2 square head bit. Attach conduit/ fittings and bring in conductor wires*.

   NOTE: It is the responsibility of the installer to select appropriate conduit/fitting materials for the installation.

**Exact locations depend on the wire entry option*

Table 4. For Top Wire Entry

For Top Entry	1	2	3
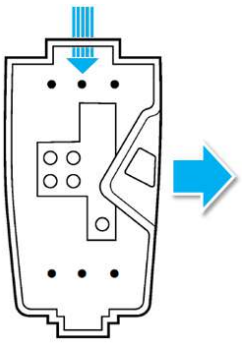		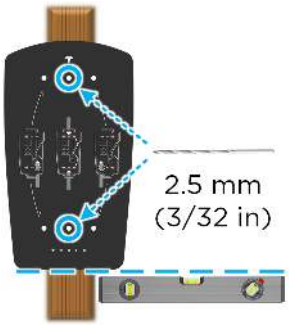	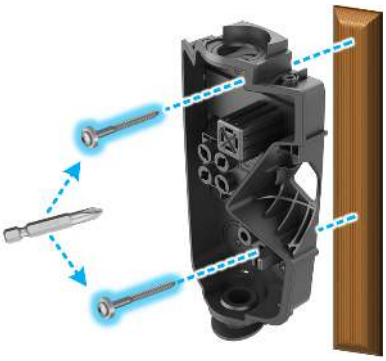

Table 5. For Bottom Wire Entry

For Bottom Entry	1	2	3
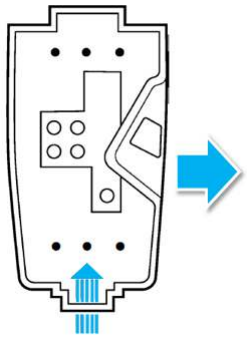		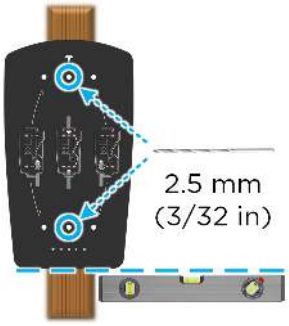	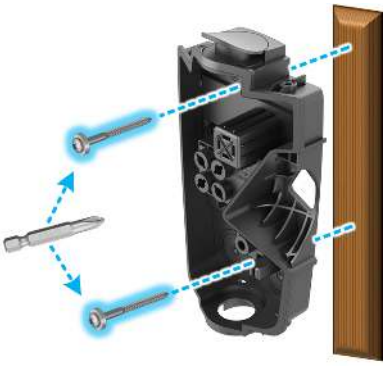

Table 6. For Rear Left Wire Entry

For Rear Left Entry	1	2	3
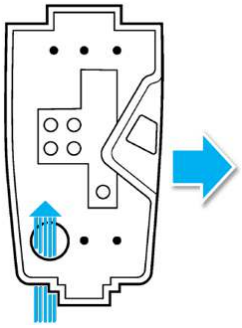	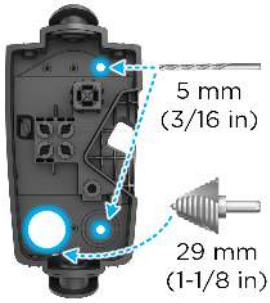	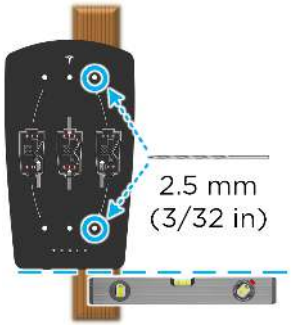	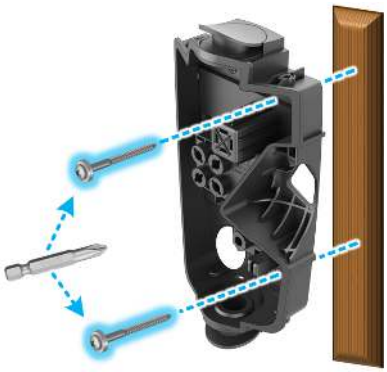

Table 7. For Rear Right Wire Entry

For Rear Right Entry	1	2	3
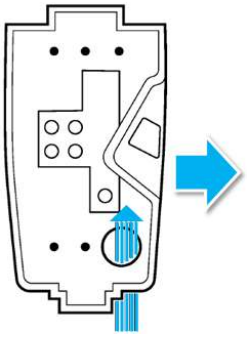		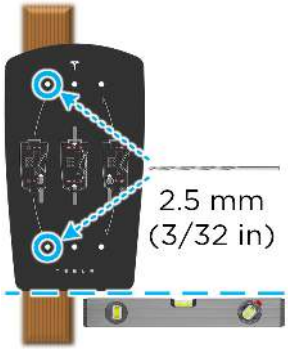	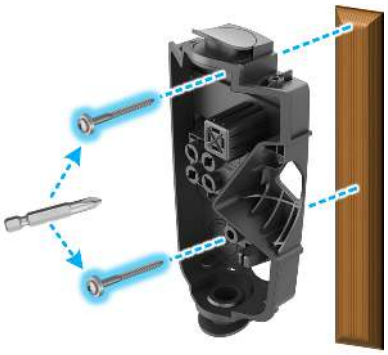

CAUTION: Wall Connector is IP 55 rated and does not need caulking. Refrain from using any bonding, sealant, or adhesives as part of the Wall Connector installation. The provided screws have sealant washers which provide adequate sealing.

Installer is responsible for providing appropriate glands, fittings, and conduit to secure incoming power supply to Wall Connector wirebox. Top and bottom entry are 28 mm in diameter when sealing plug is removed. If needed, bottom entry can be expanded using a step bit. Do not expand top entry.

STEP 4: Sizing and Routing Conductor Wires

Pull excess wire first, then cut to length. Use a wire stripper to cut each conductor wire appropriately based on entry point and position. Attach the conduit/fittings and route each conductor wire into the wirebox so it lands in the correct terminal.

NOTE: Insulation wire colors may vary based on market.

For Top Wire Entry

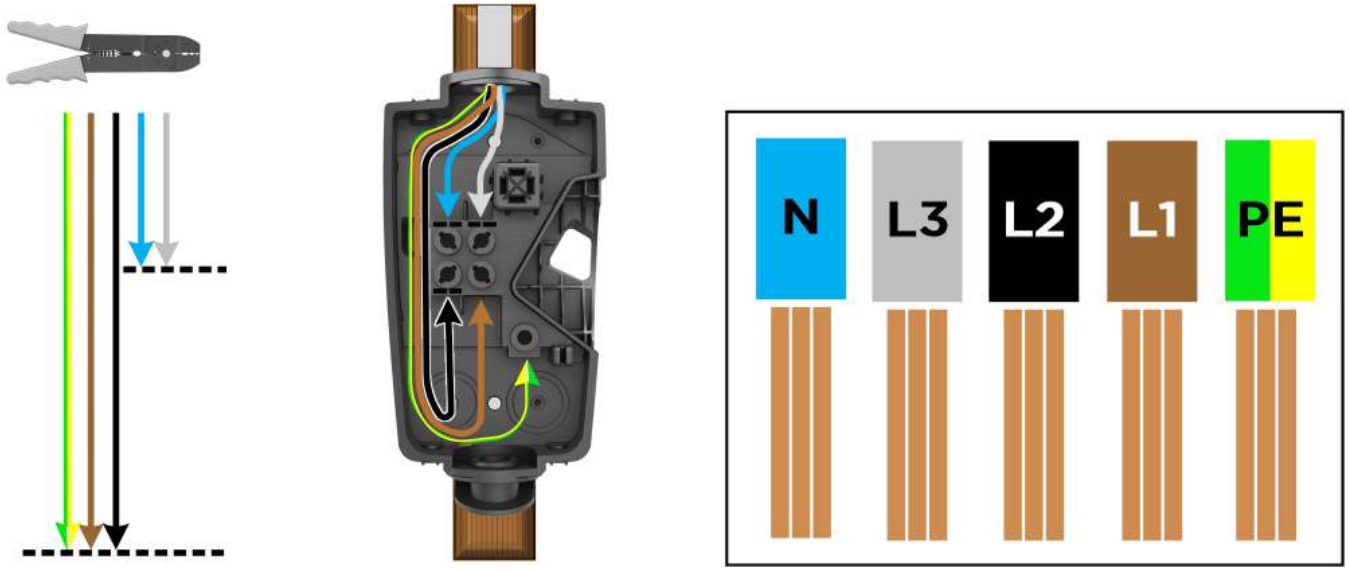

Wire lengths/proportions shown are not to scale.

For Bottom (1), Rear Left (2), or Rear Right (3) Wire Entry

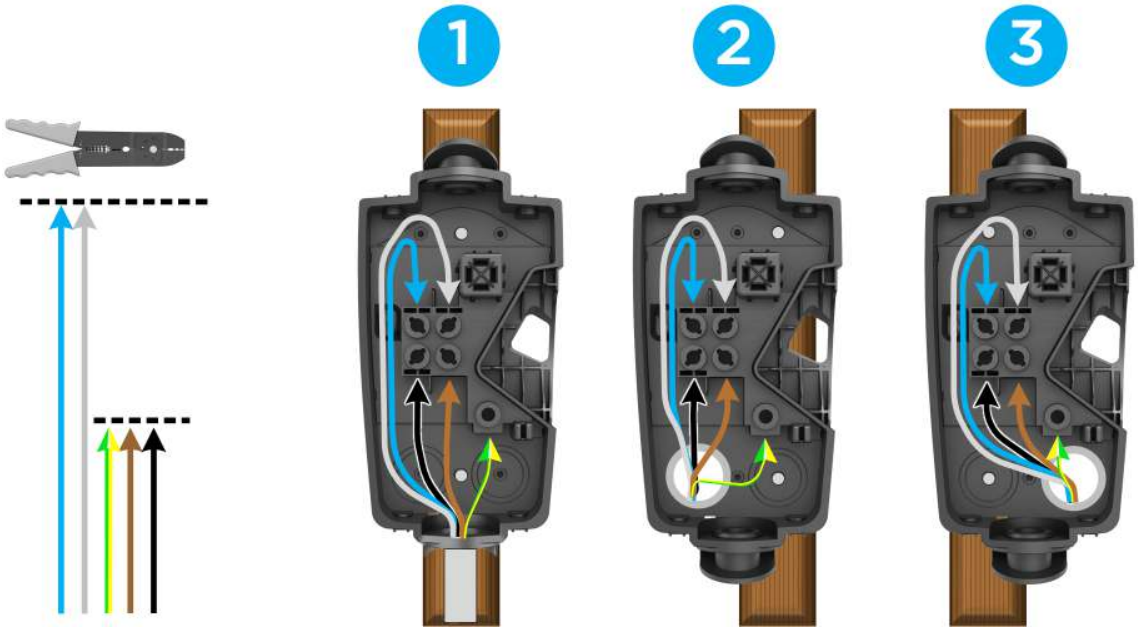

Wire lengths/proportions shown are not to scale.

STEP 5: Stripping and Securing Wires in Wirebox Terminals

1. Use a wire stripper to strip the ends of each wire to ~12 mm.

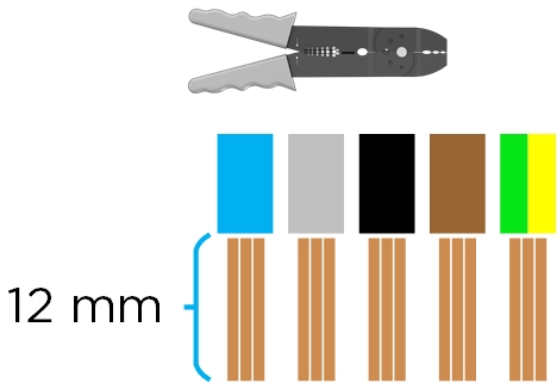

2. Insert each stripped wire into the correct terminal.

> **NOTE:** If using stranded wiring smaller than 4 mm^2, use a correctly sized ferrule so it can be securely terminated.

3. Use the included bit to torque each terminal to 5.6 Nm (50 lbf.in). Use zip ties to secure wires to service loop on the left side of the wirebox.

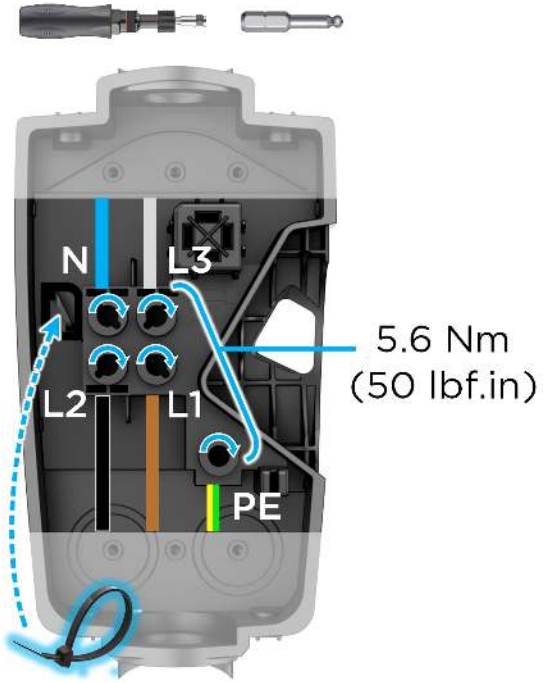

4. Use scissors to cut excess plastic off zip tie after securing in place. Ensure no wiring or other obstruction crosses over the terminal block screws before proceeding to the next step.

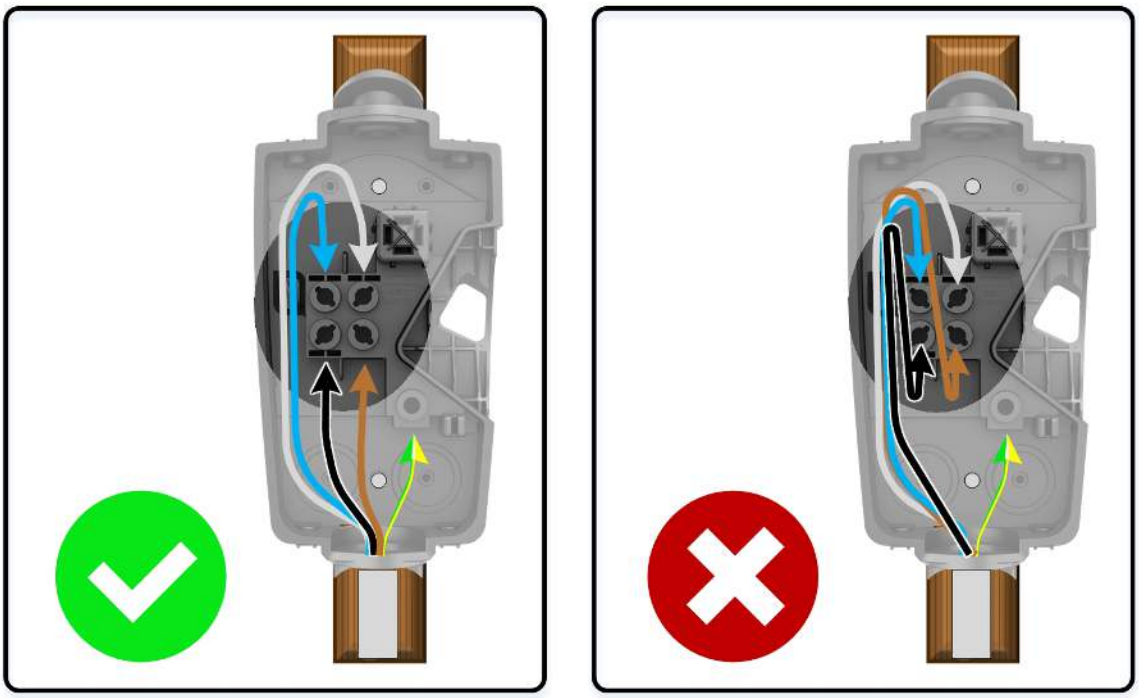

NOTE: Rear of Wall Connector has a sensor to monitor the terminal block, any obstruction from wiring or zip tie can interfere with Wall Connector operation.

STEP 6: Securing Main Unit to Wirebox

1. Attach the main unit to the wirebox.

2. Secure the main unit to the wirebox with the 4 included fasteners using the included bit. Use a bit driver to hand-tighten the fasteners.

COMMISSIONING PROCEDURE

The commissioning process for Wall Connector enables easy configuration of circuit breaker size, Wi-Fi connectivity, and power sharing options. **Wall Connectors must be commissioned before first use.**

1. Turn on Wall Connector's corresponding circuit breaker to energize the unit.
2. Use a Wi-Fi-enabled device such as a smart phone to connect to the SSID Wi-Fi signal broadcasted by the Wall Connector. Joining the Wall Connector network can be done by scanning the sticker QR code on the Quickstart Guide cover page, or by manually selecting the network and typing in the WPA2 password (found on the sticker on the Quickstart Guide cover page).

   NOTE: SSID will broadcast for 15 minutes.

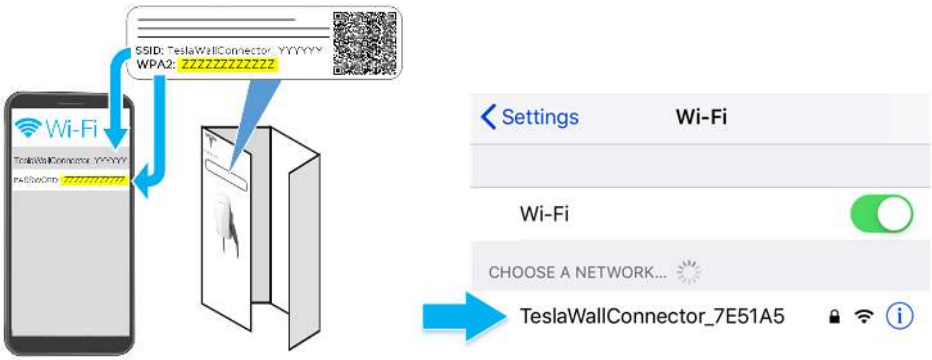

   NOTE: If you are unable to connect to the Wall Connector SSID, turn off the cellular data function on your mobile device and try again.

   NOTE: If the Wall Connector has not been commissioned, a solid yellow light will display on the front of the main unit to indicate that it is ready to be commissioned.

3. Scan the QR code below with the device that is connected to the Wall Connector to access the web browser commissioning interface. Alternatively, manually type the URL address (http://192.168.92.1) into the web browser.

4. Follow the onscreen commissioning steps on the web browser.

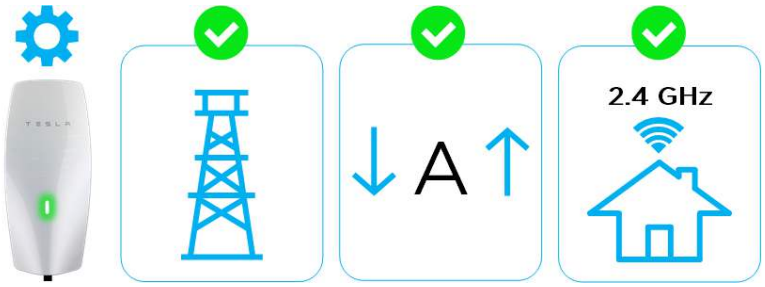

NOTE: To have the Wall Connector broadcast the SSID again, hold the button on the charge handle for 5 seconds or turn the circuit breaker off, then on again.

WALL CONNECTOR LEDS

Light Codes

Startup

Once energized at the circuit breaker, every LED (seven total) on the faceplate will illuminate for one second.

Other

After startup, waiting for commissioning	Standby, waiting to plug in	Charging in progress	SSID broadcasting, ready to commission	Waiting to charge, communicating with vehicle
Solid yellow (green + red)	Top green solid	Every green streaming	Green pulsing	Blue solid

NOTE: If a red dot is displayed, connect to Wall Connector Commissioning or see next table for all error codes.

Error Codes

All red blink codes pause for one second, and then repeat.		
Light Bar	What It Means	Details
No Lights	Power supply issue, charging disabled	Verify that the power supply is turned on. If the issue persists, have an electrician remove the Wall Connector from the wirebox and confirm that voltage is present at the terminal block using a multimeter. Record measurements at terminals of wirebox.
Solid yellow	Wall Connector is ready to be commissioned	See *Commissioning Procedure* on page 29 to commission the Wall Connector.
Solid red	Internal error, charging disabled	Turn the circuit breaker off, wait 5 seconds, and turn it back on. If solid red light remains, document part number and serial number, then contact Tesla Energy.
One (1) red blink	Earth fault circuit interruption due to unsafe current path, charging disabled	Inspect the handle, cable, Wall Connector, and vehicle charge port for damage or signs of water ingress. Contact Tesla Energy if power supply has been checked and confirmed as okay by an electrician.
Two (2) red blinks	Earth assurance fault, high earth resistance detected, charging disabled	Verify that the Wall Connector is properly connected to earth. The earth connection must be bonded in the upstream power supply for proper operation. Check all physical connections, including the wirebox terminals, electrical panel(s), and junction boxes. If connected to a transformer, contact the transformer's manufacturer for direction on how to bond the earth connection. If charging on a IT or TT grid, check ground monitor settings.
Three (3) red blinks	High temperature detected; charging limited or disabled	Verify that Wall Connector is connected to Wi-Fi and updated with the latest available firmware for optimal temperature sensing functionality. Check the faceplate and cable handle for excessive warmth. Have an electrician remove the Wall Connector from the wirebox and verify that the conductors used are sized correctly and that the terminal block is torqued to specification.
Four (4) red blinks	Internet connection lost, online features disabled	Check for objects that could interfere with the area's Wi-Fi signal strength. Confirm that the local Wi-Fi router is operational. If the Wi-Fi password was changed recently, follow the commissioning process on your mobile device to update the Wi-Fi settings.
Five (5) red blinks	Power-sharing communication issue, charging reduced	Check for objects that could interfere with the area's Wi-Fi signal strength. Follow the commissioning process on your mobile device to re-link the Wall Connectors for power-sharing.
Six (6) red blinks	Overvoltage or poor grid quality detected, charging disabled	Connect to Wall Connector with commissioning process to view live voltage info. If the issue persists, have an electrician remove the Wall Connector from the wirebox and confirm that voltage readings are as expected at the terminal block using a multimeter. Record voltage readings at terminals.
Seven (7) red blinks	Vehicle overcurrent detected	Reduce the vehicle's charge current setting. If the issue persists and the attached vehicle is manufactured by Tesla, record the vehicle's VIN and approximate time of the fault and contact Tesla. If the vehicle is not manufactured by Tesla, contact the vehicle's manufacturer.

WARRANTY INFORMATION

Subject to the exclusions and limitations described below, the Charging Equipment Limited Warranty covers the refund, repair or replacement necessary to remedy any manufacturing defects in a Tesla manufactured and supplied Wall Connector that occur under normal personal use for a period of 48 months, or a period of 12 months for normal commercial use*, and a Tesla manufactured and supplied Mobile Connector or charging adapter that occur under normal use for a period of 12 months, starting from the date of invoice to the customer for any charging equipment. Any Tesla manufactured and supplied connector or adapter included in the initial purchase and delivery of a Tesla vehicle by Tesla is covered under the Basic Vehicle Limited Warranty section of the New Vehicle Limited Warranty for 4 years or 50,000 miles (80,000 km), whichever comes first, subject to the terms and conditions of the New Vehicle Limited Warranty.

*For warranty claims specific to Wall Connectors, “commercial use” means Wall Connectors used for purposes other than charging at a residential single family home for daily personal use, which includes, but is not limited to, charging at hotels, offices, parking lots and complexes (including apartment, condominiums and other multi-family or unit dwellings), and retail and other locations that allow (including by being listed online or publicly) for pay-for-use charging, or are located where users other than the owner could reasonably obtain access to the Wall Connector.

This Charging Equipment Limited Warranty does not cover any damage or malfunction directly or indirectly caused by, due to, or resulting from, normal wear or deterioration, abuse, misuse, negligence, accident, lack of or improper installation, use, maintenance, storage or transport, including, but not limited to, any of the following:

Failure to follow the instructions, operation, maintenance and warnings published in the documentation supplied with your Tesla connector or adapter;

External factors, including but not limited to, objects striking the Tesla connector or adapter, faulty or damaged electrical wiring or connections, external electrical faults, junction boxes, circuit breakers, receptacles or power outlets, the environment or an act of God, including, but not limited to, fire, earthquake, water, lightning and other environmental conditions;

General appearance or damage to paint, including chips, scratches, dents and cracks;

Failure to contact Tesla upon discovery of a defect covered by this Charging Equipment Limited Warranty;

Any repair, alteration or modification to the Tesla connector or adapter or any part, or the installation or use of any parts or accessories, made by a person or facility not authorized or certified to do so; and

Lack of or improper installation, repair or maintenance, including use of non-genuine Tesla accessories or parts.

Although Tesla does not require you to perform all maintenance, service or repairs at a Tesla Service Center or Tesla authorized repair facility, this Charging Equipment Limited Warranty may be voided, or coverage may be excluded, due to lack of or improper maintenance, service or repairs. Tesla Service Centers and Tesla authorized repair facilities have special training, expertise, tools and supplies with respect to Tesla connectors and adapters and, in certain cases, may employ the only persons, or be the only facilities authorized or certified to work on Tesla connectors and adapters. Tesla strongly recommends that you have all maintenance, service and repairs done at a Tesla Service Center or Tesla authorized repair facility in order to avoid voiding, or having coverage excluded under, this Charging Equipment Limited Warranty.

LIMITS OF LIABILITY

This Charging Equipment Limited Warranty is the only express warranty made in connection with your Tesla connector or adapter. Implied and express warranties and conditions arising under applicable local laws, federal statute or otherwise, in law or in equity, if any, including, but not limited to, implied warranties and conditions of merchantability or merchantable quality, fitness for a particular purpose, durability, or those arising by a course of dealing or usage of trade, or any warranties against latent or hidden defects, are disclaimed to the fullest extent allowable by your local law, or limited in duration to the term of this Charging Equipment Limited Warranty. To the fullest extent allowable by your local law, the performance of necessary repairs and/or replacement of new, reconditioned, or remanufactured parts by Tesla for the covered defects is the exclusive remedy under this Charging Equipment Limited Warranty or any implied warranties. To the maximum extent permissible under your local law, liability is limited to the reasonable price for repair or replacement of the applicable Tesla connector or adapter, not to exceed the manufacturer's suggested retail price. Replacement may be made with parts of like kind and quality, including non-original manufacturer's parts, or reconditioned or remanufactured parts, as necessary. This Charging Equipment Limited Warranty covers only parts and factory labor necessary to repair but does not include any on-site labor costs related to un-installing, reinstalling or removing the repaired or replacement charging equipment. Parts repaired or replaced, including replacement of a Tesla connector or adapter, under this Charging Equipment Limited Warranty are covered only until the applicable warranty period of this Charging Equipment Limited Warranty ends, or as otherwise provided by applicable law. Under no circumstances will the original warranty period be extended as a result of your Tesla connector or adapter being repaired or replaced.

Tesla shall not be liable for any defects under this Charging Equipment Limited Warranty that exceed the fair market value of the applicable Tesla connector or adapter at the time immediately preceding the discovery of the defect. In addition, the sum of all benefits payable under this Charging Equipment Limited Warranty shall not exceed the price you paid for the applicable Tesla connector or adapter.

Tesla does not authorize any person or entity to create for it any other obligations or liability in connection with this Charging Equipment Limited Warranty. Subject to local laws and regulations, the decision of whether to repair or replace a part or to use a new, reconditioned or remanufactured part will be made by Tesla, in its sole discretion. Tesla may occasionally offer to pay some or all of the cost of certain repairs that are not covered by this Charging Equipment Limited Warranty, either for specific models or on an ad hoc, case-by-case basis. Tesla reserves the right to do the above at any time without incurring any obligation to make a similar payment to other Tesla charging equipment owners.

To the maximum extent permissible under local law, Tesla hereby disclaims any and all indirect, incidental, special and consequential damages arising out of, or relating to, the Tesla connector or adapter, including, but not limited to, transportation to and from a Tesla Authorized Service Center, loss of the Tesla connector or adapter, loss of vehicle value, loss of time, loss of income, loss of use, loss of personal or commercial property, inconvenience or aggravation, emotional distress or harm, commercial loss (including but not limited to lost profits or earnings), towing charges, bus fares, vehicle rental, service call charges, gasoline expenses, lodging expenses, damage to tow vehicle, and incidental charges such as telephone calls, facsimile transmissions, and mailing expenses.

The above limitations and exclusions shall apply whether your claim is in contract, tort (including negligence and gross negligence), breach of warranty or condition, misrepresentation (whether negligent or otherwise), or otherwise at law or in equity, even if Tesla is advised of the possibility of such damages or such damages are reasonably foreseeable.

Nothing in this Charging Equipment Limited Warranty shall exclude, or in any way limit, Tesla's liability for death or personal injury solely and directly caused by Tesla's negligence, or that of its employees, agents or sub-contractors (as applicable), fraud or fraudulent misrepresentation, or any other liability to the extent the same is proven in a court of competent jurisdiction in a final nonappealable judgment and may not be excluded or limited as a matter of local law.

DISPUTE RESOLUTION

Tesla requires that you first provide written notification of any manufacturing defect within a reasonable time, and within the applicable coverage period specified in this Charging Equipment Limited Warranty, and allow Tesla an opportunity to make any needed repairs before submitting a dispute to our dispute settlement program (described below). Please send written notification on dispute resolution to the following address:

Vehicles registered in the UK:

Tesla Motors Ltd

Company number: 04384008

197 Horton Road, West Drayton

England, UB7 8JD

Please include the following information:

- Tesla Part Number and Serial Number
- Your name and contact information
- Name and location of the Tesla Store and/or Tesla Service Center nearest to you
- Description of the defect
- History of the attempts you have made with Tesla to resolve the concern, or of any repairs or services that were not performed by Tesla
- In the event any disputes, differences, or controversies arise between you and Tesla related to this Charging Equipment Limited Warranty, Tesla will explore all possibilities for an amicable settlement

Revision 1.0

APPLICATION NOTE – WALL CONNECTOR, UK TN-C-S (PME) SITES

Overview

The UK has specific regulations to improve the safety of EV chargers installed onto premises supplied by a TN-C-S (PME) supply. The purpose of this application note is to highlight the code requirements (BS7671) and to discuss options for meeting these requirements.

It is imperative that the installer reads the relevant sections of BS 7671 and the IET Electric Vehicle Charging Equipment Installation Code of Practice, 4th edition to ensure that the installation complies with British regulations.

Contents

Overview 1
Background 2
Applicable Codes and Standards 2
Five Options in BS7671 3
  Option (i) 3
  Option (ii) 3
  Option (iii) 4
  Option (iv) 4
  Option (v) 4
BS IEC EN 61851-1:2019 clause 8.4 5
PEN disconnection devices 5
Alternative Options 6
  Electrical Separation – Install an Isolating Transformer 6
  TT Earthing System – Convert Only the Charger Circuit to TT 6
  TT Earthing System – Convert Entire Site to TT 7

© Copyright 2021 Tesla Inc. All Rights Reserved.

Background

The most common residential earthing arrangement in the UK is TN-C-S, also called Protective Multiple Earthing (PME). The typical supply arrangement is a single core armoured cable, with the sheath of the cable forming the combined protective earth and neutral (PEN) conductor. Sheath corrosion, while rare, does occur. If the PEN conductor in the system is broken, this can create a hazard. An RCD would not trip if such a fault occurs, as the current flowing through L and N remains equal. The diagram below illustrates this problem.

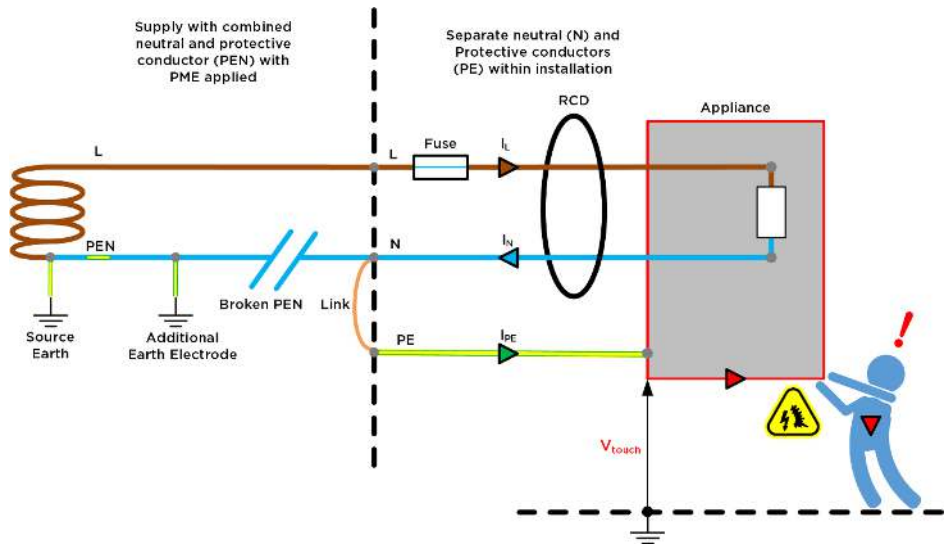

Figure 1: A break in the PEN conductor happens before the installation. No return path is available for the load current. V_{touch} > 0 V and can be dangerous. If a user connects PE and true earth by touching the metalwork, the load current will flow through the user: $I_L = I_N = I_{PE}$. The RCD does not trip and the user is in danger.

Due to the potentially fatal nature of a broken PEN conductor, the UK has developed requirements to improve the safety of EV chargers on TN-C-S systems.

NOTE: Similar challenges exist for other "outdoor" circuits in the UK (e.g. PV systems), this is not a problem specific to vehicle charging.

Applicable Codes and Standards

- BS 7671 Amendment-1:2020 – Requirements for Electrical Installations, 18th edition.
  - Section 722 covers Electric vehicle charging installations
  - Regulation 722.411.4.1 imposes particular requirements for charging installations on a TN-C-S, PME supply; and provides 5 options to adopt

    NOTE: This YouTube video does a good job at explaining the BS 7671:2018-amd1:2020 requirements
- IET Electric Vehicle Charging Equipment Installation Code of Practice, 4th edition. Referred to in this document as the "Code of Practice"
- BS IEC EN 61851-1:2019 - Electric vehicle conductive charging system Part 1. The British version of the IEC product standard for EV chargers

© Copyright 2021 Tesla Inc. All Rights Reserved.

Five Options in BS7671

BS7671 (Amendment1:2020) - 722.411.4.1 does not permit the PME earthing facility to be used as the means of earthing for the EV charger unless one of five different options is used:

722.411.4 A PME earthing facility shall not be used as the means of earthing for the protective conductor contact of a charging point located outdoors or that might reasonably be expected to be used to charge a vehicle located outdoors unless one of the following methods is used:

Option (i)

722.411.4 (i) The charging point forms part of a three-phase installation that also supplies loads other than for electric vehicle charging and, because of the characteristics of the load of the installation, the maximum voltage between the main earthing terminal of the installation and Earth in the event of an open-circuit fault in the PEN conductor of the low voltage network supplying the installation does not exceed 70 V rms

As most homes in the UK are single-phase, and 3-phase sites with suitable load characteristics are rare, this option is not generally applicable.

Option (ii)

722.411.4 (ii) The main earthing terminal of the installation is connected to an installation earth electrode by a protective conductor complying with Regulations 544.1.1. The resistance of the earth electrode to Earth shall be such that the maximum voltage between the main earthing terminal of the installation and Earth in the event of an open-circuit fault in the PEN conductor of the low voltage network supplying the installation does not exceed 70 V rms.

The required earth resistance as calculated according to the Code of Practice (Table G3) is given in the table below. This resistance is very low and generally not achievable, hence option (ii) is not applicable in most circumstances

EV charging current (A)*	$R_{A\ ev}$ (ohms)
10	5.1
20	3.3
32	2.4
60	1.4
*Assumes an installation current of 2 kW (9 A) excluding the vehicle charging current	

© Copyright 2021 Tesla Inc. All Rights Reserved.

Option (iii)

722.411.4 (iii) Protection against electric shock is provided by a device which electrically disconnects the vehicle from the live conductors of the supply and from protective earth in accordance with Regulations 543.3.3.101(ii) within 5 s in the event of the voltage between the circuit protective conductor and Earth exceeding 70 V rms due to an open-circuit fault in the PEN conductor of the low voltage network. The device need not operate if the voltage exceeds 70 V rms for less than 4 s. The device shall provide isolation and be selected in accordance with Table 537.4. Closing or resetting of the device shall be possible only if the voltage between the circuit protective conductor and Earth does not exceed 70 V rms. Equivalent means of functionality could be included within the charging equipment.

While a possible solution, the limited availability of products and the need for additional earth electrode mean this option is not generally preferred

NOTE: **IEC 61851-1 does not allow an EV charger to disconnect the protective earth conductor – hence, in order to utilise this option, an external disconnection device is required.**

Option (iv)

722.411.4 (iv) Protection against electric shock in a single-phase installation is provided by a device which electrically disconnects the vehicle from the live conductors of the supply and from protective earth in accordance with Regulation 543.3.3.101(ii) within 5 s in the event of the utilisation voltage at the charging point, between the line and neutral conductors, being greater than 253 V rms or less than 207 V rms. The device shall provide isolation and be selected in accordance with Table 537.4. Equivalent means of functionality could be included within the charging equipment. Closing or resetting of the device shall be possible only if the voltage between line and neutral conductors is in the range 207 to 253 V rms.

This is a practical solution and the method commonly selected by installers of Tesla chargers.

NOTE: **IEC 61851-1 does not allow an EV charger to disconnect the protective earth conductor – hence, in order to utilise this option, an external disconnection device is required.**

Option (v)

722.411.4 (v) Protection against electric shock is provided by the use of an alternative device to those in (iii) or (iv) which does not result in a lesser degree of safety than using (iii) or (iv). Equivalent means of functionality could be included within the charging equipment. The device (or means of functionality) shall operate by electrically disconnecting the vehicle from the live conductors of the supply and from protective earth in accordance with Regulation 543.3.3.101(ii). It shall provide isolation and be selected in accordance with Table 537.4.

NOTE: IEC 61851-1 does not allow an EV charger to disconnect the protective earth conductor.

© Copyright 2021 Tesla Inc. All Rights Reserved.

BS IEC EN 61851-1:2019 clause 8.4

BS IEC EN 61851-1:2019 "Electric vehicle conductive charging system" is the applicable product standard for EV chargers such as the Tesla Wall Connector. Clause 8.4 specifically discusses the requirements for an EVSE product with regards to the protective earthing conductor and includes a requirement that precludes switching of the earthing conductor within the charger:

BS IEC EN 61851-1:2019

Clause 8.4 Protective conductor (extract)

For Modes 3 and 4 permanently connected EV supply equipment, protective earthing conductors shall not be switched.

This means that a Mode 3 EV charger (like the Tesla Wall Connector) cannot in itself provide the isolation described within BS7671 722.411.4.1 (iii), (iv) or (v); and in order for an installation to comply, an external means of isolation is required.

PEN disconnection devices

Commercial stand-alone devices are readily available to provide an installation that is compliant with option (iv) of Regulation 722.411.4. **This is a practical solution and the method commonly selected by installers of Tesla chargers**. In addition to following manufacturer's instructions, an installer should consult the Code of Practice to ensure that the device is suitable for the specific application and conditions on site. Nuisance tripping is known to occur on certain devices, installers are recommended to research any history of nuisance tripping before selecting a product.

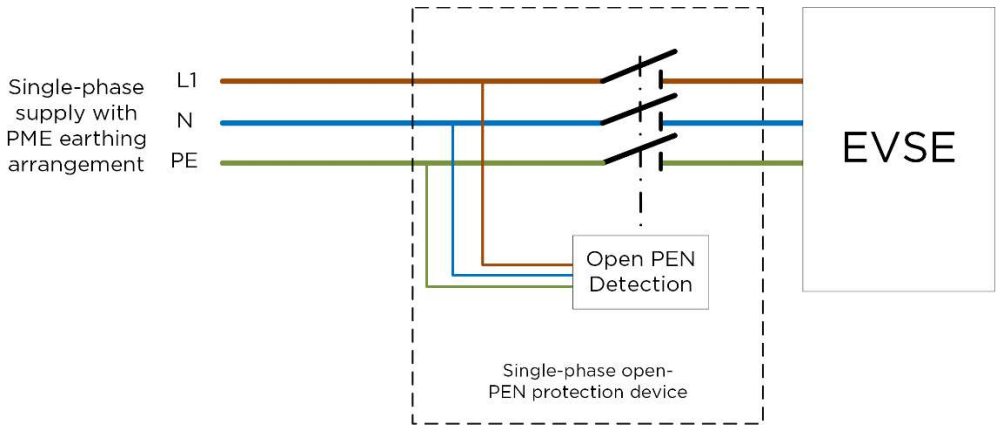

Figure 2: Single-phase open-circuit PEN conductor protection device that facilitates an installation compliant with 722.411.4 (iv)

© Copyright 2021 Tesla Inc. All Rights Reserved.

Alternative Options

The Code of Practice mentions two alternative options that can be taken to comply with UK regulations, including:

1. Electrical separation by using an isolating transformer
2. Converting the earthing system to TT by either:
   a. Making the circuit that supplies the charging equipment part of a TT system
   b. Converting the whole installation to a TT earthing system

Electrical Separation – Install an Isolating Transformer

This option provides electrical separation between the charger and the general installation. Such an installation needs to meet all the requirements of Section 413 of BS 7671.

The cost of the transformer, and inherent losses, generally deter installers from selecting this option.

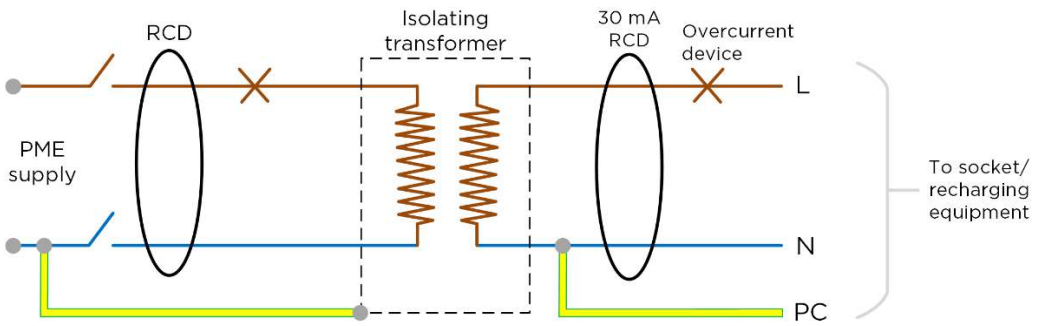

Figure 3: Charging equipment separated from the TN-C-S (PME) supply earth by an isolating transformer

TT Earthing System – Convert Only the Charger Circuit to TT

The Code of Practice mentions that this option is only acceptable providing:

- There is no possibility of contact between the TT and TN-C-S systems
- The earth electrode zone of the TT system does not overlap the zone of any buried metalwork that might be connected to the TN-C-S system.
- Buried metalwork cannot influence the potential of the ground a person is standing on while close to a vehicle in the event of a fault in the PEN conductor.

The Code of Practice requires a risk assessment to be done to assess the above, and provides details in annexures B, C, D and E.

NOTE: Where the charger is installed in conjunction with a Powerwall, a separate earth electrode for the Powerwall is very likely. In this case there must be sufficient separation, as described above, between the two electrodes. This may be hard to achieve on many UK homes due to their relatively small size and lack of options for suitable electrode locations

The complexities of complying with all of the requirements as described in the Code of Practice may deter installers from utilising this option

© Copyright 2021 Tesla Inc. All Rights Reserved.

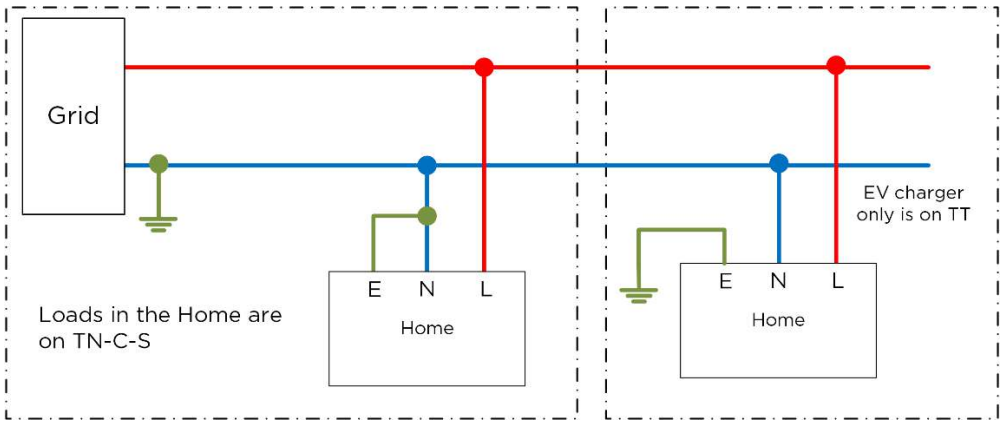

Figure 4: Charger converted to TT

TT Earthing System – Convert Entire Site to TT

While presented as an option, the Code of Practice does not recommend conversion of the entire installation to TT if:

- The installation is semi-detached or terraced housing where adjacent properties are supplied from a PME earthing system
- The installation is a small commercial premises in a densely built-up area

The Code of Practice mentions the following issues that can arise when converting the entire installation to TT:

- Earth fault loop impedance increases, RCD protection is therefore required, in addition to overcurrent devices
- Touch voltages between the general mass of the earth and the protective earthing, may be greater than a TN system.
- The installation will be more susceptible to surges

The Code of Practice also requires a risk assessment to be done to ascertain the risk of contact with an adjacent TN system.

The complexities of complying with all of the requirements as described in the Code of Practice may deter installers from utilising this option

© Copyright 2021 Tesla Inc. All Rights Reserved.