Rechargeable Li-ion Battery
US3000 Product Manual

Information Version: 2.3
21BQSV0404

This manual introduces US3000 from Pylontech. Please read this manual before you to install the battery and follow the instruction carefully during the installation process. Any confusion, please contact Pylontech immediately for advice and clarification.

Contents

1. SAFETY PRECAUTIONS 1

1.1 Before Connecting 1
1.2 In Using 1

2. INTRODUCTION 3

2.1 features: 3
2.2 Specifications 3
2.3 Equipment Interface Instruction 5
US3000 Product Front Interface 5
Definition of RJ45 Port Pin 6
Definition of RJ11 Port Pin 7
LED Indicators Instructions 8

3. SAFE HANDLING OF LITHIUM BATTERIES GUIDE 9

3.1 Schematic Diagram of Solution 9
3.2 Explanation of Symbol 9
3.3 Tools 10
3.4 Safety Gear 10

4. INSTALLATION 11

4.1 Package Items 11
Unpacking and check the Packing List 11
4.2 Installation Location 12
Installation 13
A. Put battery modules into cabinet and connect the cables 13
B. Power On 15
C. Installation with bracket 16
D. Multiple Battery Groups CAN/RS485 Communication Cable Connection 20

5. TROUBLE SHOOTING STEPS 22

5.1 Problem determination based on: 22
5.2 Preliminary determination steps: 22
5.3 The battery cannot be charged or discharged 22

6. EMERGENCY SITUATIONS 23

1. Safety Precautions

Reminding

1) It is very important and necessary to read the user manual carefully (in the accessories) before installing or using battery. Failure to do so or to follow any of the instructions or warnings in this document can result in electrical shock, serious injury, or death, or can damage battery, potentially rendering it inoperable.
2) If the battery is stored for long time, it is required to charge them every six months, and the SOC should be no less than 90%;
3) Battery needs to be recharged within 12 hours, after fully discharged;
4) Do not expose cable outside;
5) All the battery terminals must be disconnected for maintenance;
6) Please contact the supplier within 24 hours if there is something abnormal.
7) Do not use cleaning solvents to clean battery;
8) Do not expose battery to flammable or harsh chemicals or vapors;
9) Do not paint any part of battery, include any internal or external components;
10) Do not connect battery with PV solar wiring directly;
11) The warranty claims are excluded for direct or indirect damage due to items above.
12) Any foreign object is prohibited to insert into any part of battery.

Warning

1.1 Before Connecting

1) After unpacking, please check product and packing list first, if product is damaged or lack of parts, please contact with the local retailer;
2) Before installation, be sure to cut off the grid power and make sure the battery is in the turned-off mode;
3) Wiring must be correct, do not mistake the positive and negative cables, and ensure no short circuit with the external device;
4) It is prohibited to connect the battery and AC power directly;

5) The embedded BMS in the battery is designed for 48VDC, please DO NOT connect battery in series;
6) Battery system must be well grounded and the resistance must be less than 1Ω ;
7) Please ensured the electrical parameters of battery system are compatible to related equipment;
8) Keep the battery away from water and fire.

1.2 In Using

1)If the battery system needs to be moved or repaired, the power must be cut off and the batteryis completely shutdown;

2) It is prohibited to connect the battery with different type of battery.
3) It is prohibited to put the batteries working with faulty or incompatible inverter;
4) It is prohibited to disassemble the battery (QC tab removed or damaged);
5) In case of fire, only dry powder fire extinguisher can be used, liquid fire extinguishers are prohibited;
6) Please do not open, repair or disassemble the battery except staffs from Pylontech or authorized by Pylontech. We do not undertake any consequences or related responsibility which because of violation of safety operation or violating of design, production and equipment safety standards.

2. Introduction

US3000 lithium iron phosphate battery is one of new energy storage products developed and produced by Pylontech, it can be used to support reliable power for various types of equipments and systems. US3000 is especially suitable for application scene of high power, limited installation space, restricted load-bearing and long cycle life.

US3000 has built-in BMS battery management system, which can manage and monitor cells information including voltage, current and temperature. What's more, BMS can balance cells charging and discharging to extend cycle life.

Multiple batteries can connected in parallel to expand capacity and power in parallel for larger capacity and longer power supporting duration requirements.

2.1 features:

- The whole module is non-toxic, non-polluting and environmentally friendly;
- Cathode material is made from LiFePO4 with safety performance and long cycle life;
- Battery management system (BMS)has protection functions including over-discharge, over-charge, over-current and high/low temperature;
- The system can automatically manage charge and discharge state and balance current and voltage of each cell;
- Flexible configuration, multiple battery modules can be in parallel for expanding capacity and power
- Adopted self-cooling mode rapidly reduced system entire noise;
  The module has less self-discharge, up to 6 months without charging it on shelf, no memory effect, excellent performance of shallow charge and discharge;
- Working temperature range is from -10℃ to 50℃, (Charging 0~50℃; discharging -10~50℃) with excellent discharge performance and cycle life;
- Small size and light weight, standard of 19-inch embedded designed module is comfortable for installation and maintenance;

2.2 Specifications

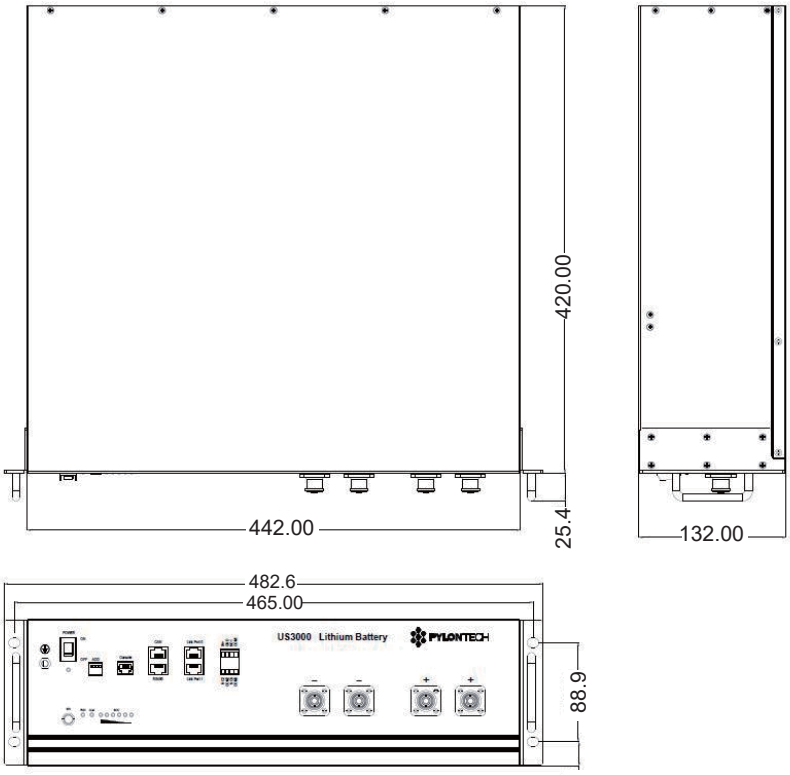

Basic Parameters	US3000
Nominal Voltage (V)	48
Nominal Capacity (Wh)	3552
Usable Capacity (Wh)	3375
Dimension (mm)	442*420*132
Weight (Kg)	32
Discharge Voltage (V)	45 ~ 53.5
Charge Voltage (V)	52.5 ~ 53.5
Recommend Charge/Discharge Current (A)	37
Max. Charge/Discharge Current (A)	74@60sec
Peak Charge/Discharge Current (A)	100@15sec
Communication	RS485, CAN
Configuration (max. in 1 battery group)	8pcs
Working Temperature	0℃~50℃ Charge
	-10℃~50℃ Discharge
Shelf Temperature	-20℃~60℃
Protective class	IP20
Cooling type	Natural Cooling
IP rating of enclosure	IP20
Humidity	5%~ 85%
Certification	IEC62619/ CE / UN38.3
Design life	10+ Years (25℃/77℉)
Cycle Life	>6,000 25℃
Reference to standards	IEC62619, IEC62040, IEC62477-, IEC61000-6-2,IEC61000-3, UN38.3

2.3 Equipment Interface Instruction

This section details the front and back panel of the interface functions.

US3000 Product Front Interface

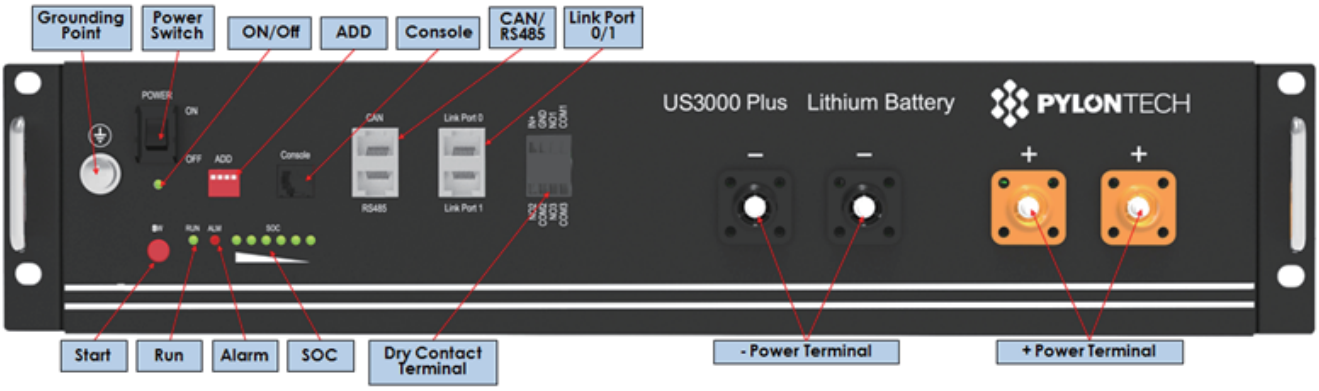

Power Switch

Power Switch: to turn ON/OFF the whole battery BMS standby, no power output.

ON/OFF

ON/OFF light: green LED lighting to show the Power Switch is ON, and the BMS has electricity (No power output).

RUN

RUN light: green LED lighting to show the battery running status

Alarm

Alarm light: red LED flashing to show the battery has alarm, and lighting to show the battery is under protection.

SOC

SOC light: 6 green LEDs to show the battery's current capacity.

Start

Start Button: press more than 0.5s to start the battery module, Power output ready.

ADD Switch

ADD Switch: 4 ADD switches, Dip1 to definite different baud rate (0 is 115200, 1 is 9600). "0"and"1", refer to picture right. "0XXX" setup the baud rate 115200, and "1XXX" setup the baud rate 9600. **The settings will be active only after restart the battery.**

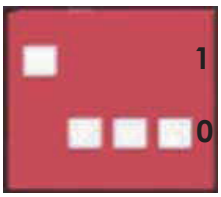

The slave battery's address will be assigned automatically. 1 master battery can supervise 7 slave batteries (maximum 8 batteries in each battery group). Multiple battery groups should setup the master batteries' ADD switch. (Refer to Chapter 4 / D)

Dip2	Dip3	Dip4	Group Address Number
0	0	0	0th: Single battery group's master battery should setup as this.
1	0	0	1st: 1st battery group's master battery should setup as this.
0	1	0	2nd: 2nd battery group's master battery should setup as this.
1	1	0	3rd: 3rd battery group's master battery should setup as this.
0	0	1	4th: 4th battery group's master battery should setup as this.
1	0	1	5th: 5th battery group's master battery should setup as this.
0	1	1	6th: 6th battery group's master battery should setup as this.
1	1	1	7th: 7th battery group's master battery should setup as this.

Console

Console Communication Terminal: (RJ11 port) follow RS232 protocol (Baud Rate: 1200), for manufacturer or professional engineer to debug or service.

CAN

CAN Communication Terminal: (RJ45 port) follow CAN protocol (Baud Rate: 500K), for output batteries information.

RS485

R485 Communication Terminal: (RJ45 port) follow RS485 protocol (Baud Rate: 9600 or115200), for output batteries information.

Link Port 0, 1

Link Port 0, 1 Communication Terminal: (RJ45 port), for communication between multiple parallel batteries.

Definition of RJ45 Port Pin

No.	RS485Pin	CAN Pin
1	RS485 B	--
2	RS485 A	GND
3	--	--
4	--	CANH
5	--	CANL
6	GND	--
7	RS485A (recommend)	--
8	RS485B (recommend)	--

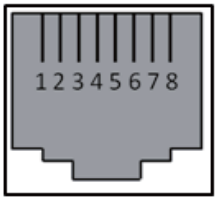

RJ45 Port

RJ45 Plug

Definition of RJ11 Port Pin

No.	232 Pin
1	GND
2	TXD
3	RXD
4	GND

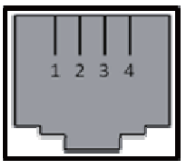

RJ11 Port

RJ11 Plug

Power Terminals

Power cable terminals: there are two pair of terminals with same function, one connect to equipment, the other one paralleling to other battery module for capacity expanding. For each single module, each terminal can achieve charging and discharging function.

For power cables uses water-proofed connectors. It must keep pressing this Lock Button while pulling out the power plug.

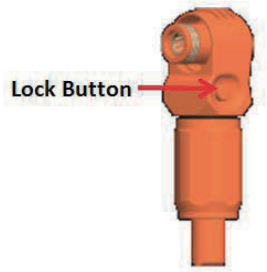

Dry Contact Terminal

Dry Contact Terminal: provided 1 way input and 3 ways output dry contact signal.

LED Status Indicators

- ✧ RUN Lamp (No.6 Figure 2-1): green, long lighting when charging and flash when discharging;
- ✧ ALM Lamp (No.7 Figure 2-1 7): red, flashes when alarm and long bright if equipment failure or protected;
- ✧ Battery capacity indicator (No.8 Figure 2-1): 6 green lamps, each light represent 16.6% capacity.

LED Indicators Instructions

Condition	RUN	ALR	1	2	3	4	5	6
Power off	-	-	-	-	-	-	-	-
Power on	●	●	●	●	●	●	●	●
Idle/Normal	●	-	-	-	-	-	-	-
Charge	●	-	Show soc; highest LED flash on: 0.5s; off 0.5s					
Discharge	●		Show soc					
Alarm	ALR: ●; Other LEDs are same as above.							
System error/Protect	-	●	-	-	-	-	-	
●/●	ON							
●	flash, on: 0.3s; off: 3.7s							
●/●	flash, on:0.5s; off: 1.5s							

BMS function:

Protection and Alarm	Management and Monitor
Charge/Discharge End	Cells Balance
Charge Over Voltage	Intelligent Charge Model
Discharge Under Voltage	Charge/Discharge Current Limit
Charge/Discharge Over Current	Capacity Retention Calculate
High/Low Temperature(cell/BMS)	Administrator Monitor
Short Circuit	Operation Record
Power Cable Reverse	

3. Safe handling of lithium batteries Guide

3.1 Schematic Diagram of Solution

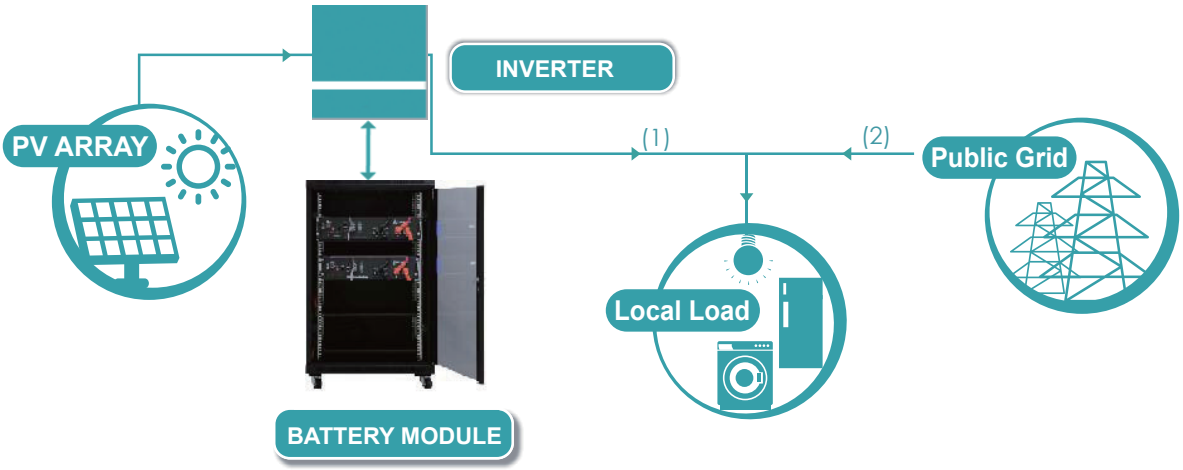

3.2 Explanation of Symbol

DANGER

DANGER LOW DC VOLTAGE INSIDE
DANGER ARC FLASH & SHOCK HAZARD

* Do not disconnect or disassemble by non-professional personnel.
* Do not drop, deform, impact, cut or spearing with a sharp object.
* Do not place at a children or pet touchable area.
* Do not place near open flame or flammable material.
* Do not cover or wrap the product case.
* Do not sit or put heavy things on battery.
* Do not touch the leaking liquid.
* Avoid of direct sunlight.
* Avoid of moisture or liquid.
* The product Ingress Protection (IP) class is IP20.
* Make sure the grounding connection set correctly before operation.
* Follow the product manual to make wiring connection.
* If leaking, fire, wet or damaged, switch off the breaker on DC side and stay away from battery.
* Contact your supplier within 24 hours if anything failure happens.

3.3 Tools

The following tools are required to install the battery pack

Wire cutter

Crimping Modular Plier

Screw Driver

NOTE

Use properly insulated tools to prevent accidental electric shock or short circuits.
If insulated tools are not available, cover the entire exposed metal surfaces of the available tools, except their tips, with electrical tape.

3.4 Safety Gear

It is recommended to wear the following safety gear when dealing with the battery pack

Insulated gloves

Safety goggles

Safety shoes

4. Installation

4.1 Package Items

Unpacking and check the Packing List

1) For battery module package:

Two power cables and one communication cable for each battery package:

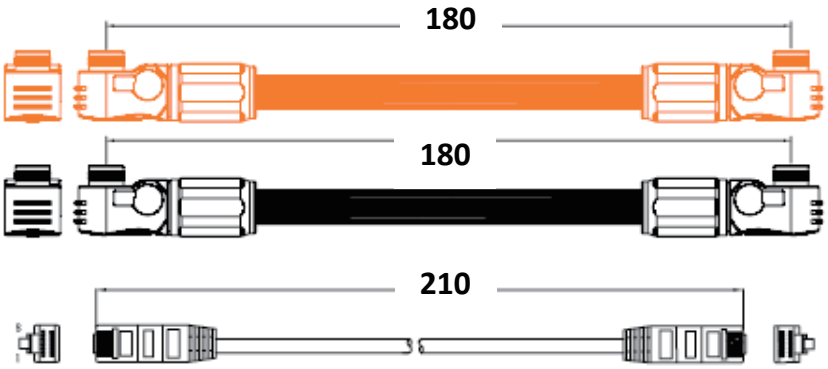

Grounding cable:

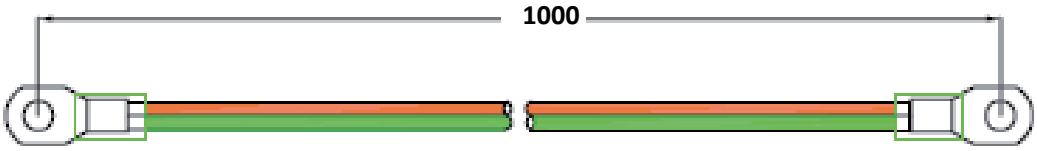

Grounding cables use 10AWG yellow-green cables.

US3000 modules' grounding is based on metal directly touch between the module's surface and rack's surface. So it needn't grounding cables at all. If uses normal rack, it can remove the paint at the corresponding place.

Or install a grounding cable to the grounding point of the modules.

2) For Battery system connects to inverter (Not within battery package):

Two long power cables (current capacity **100A**) and one communication cable for each energy storage system:

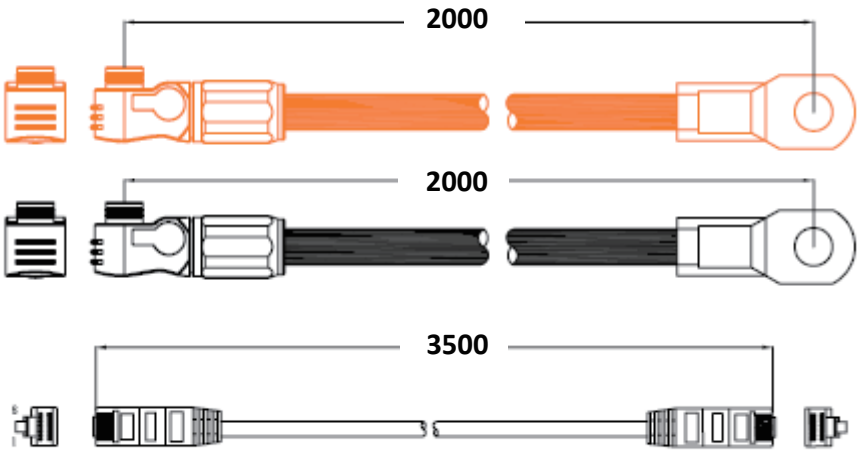

NOTE

These three long cables are belonging to External Cable Kit, **NOT in battery package**. They are in another **extra small cable box**. If there is anything missed please contact dealer.

4.2 Installation Location

Make sure that the installation location meets the following conditions:

- The area is completely water proof.
- The floor is flat and level.
- There are no flammable or explosive materials.
- The ambient temperature is within the range from 0°C to 50°C.
- The temperature and humidity is maintained at a constant level.
- There is minimal dust and dirt in the area.
- The distance from heat source is more than 2 meters
- The distance from air outlet of inverter is more than 0.5 meters.
- Do not cover or wrap the battery case or cabinet.
- Do not place at a children or pet touchable area.
- The installation area shall avoid of direct sunlight.
- There is no mandatory ventilation requirements for battery module,but please avoid of installation in confined area.The aeration shall avoid of high salinity, humidity or temperature.

CAUTION

If the ambient temperature is outside the operating range, the battery pack stops operating to protect itself. The optimal temperature range for the battery pack to operate is 0°C to 50°C. Frequent exposure to harsh temperatures may deteriorate the performance and life of the battery pack.

Installation

A. Put battery modules into cabinet and connect the cables:

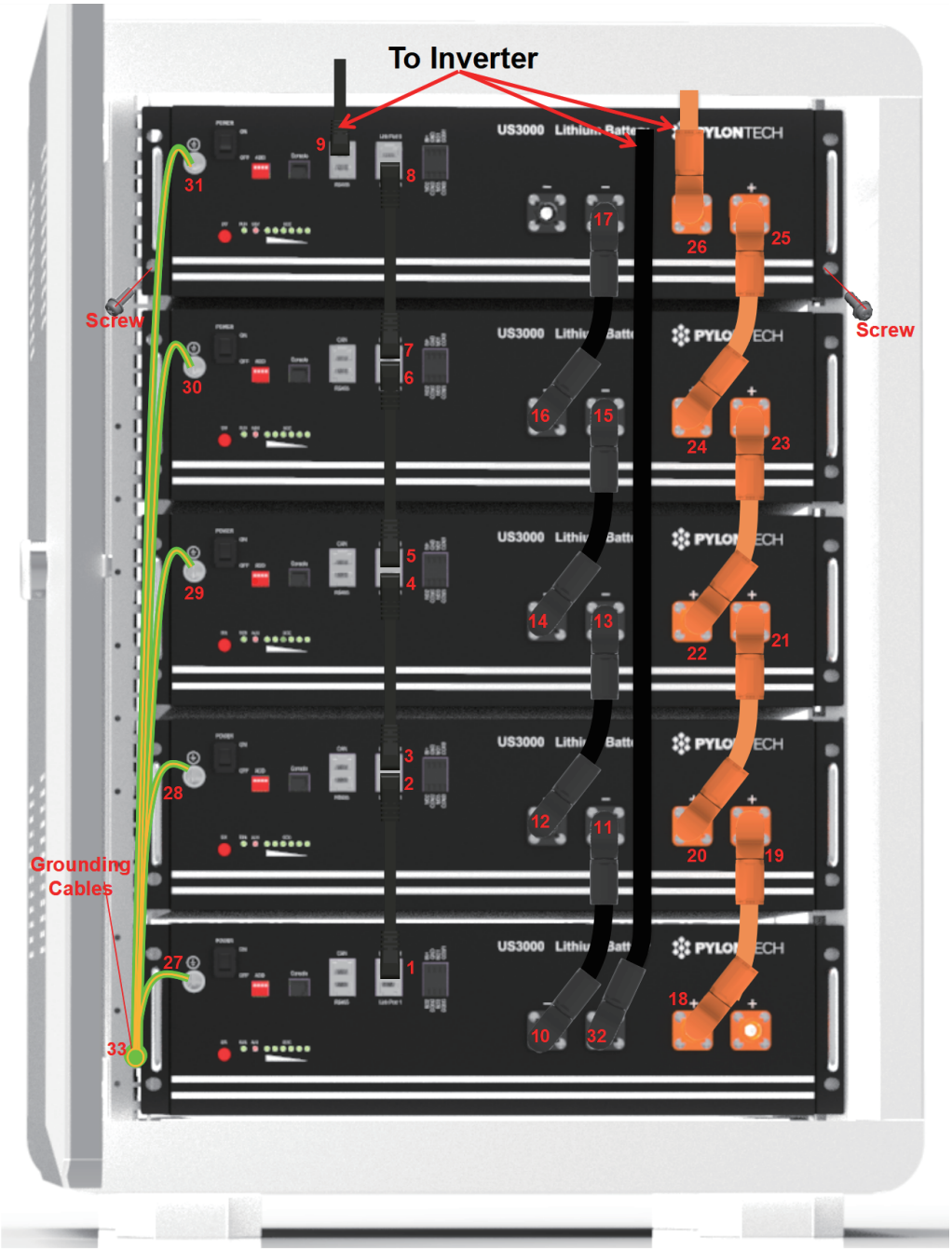

① Put the battery into the cabinet;
② Drive the 4 pcs screws;
③ Connect the cables between battery modules
④ Connect the cables to inverter

B. Power On

Double check all the power cable and communication cable.

(1) Switch power on

Switch on all the battery modules:

(2) The one with **empty Link Port 0** is the **Master Battery** Module, others are slaves (1 master battery configure with maximum 7 slave batteries):

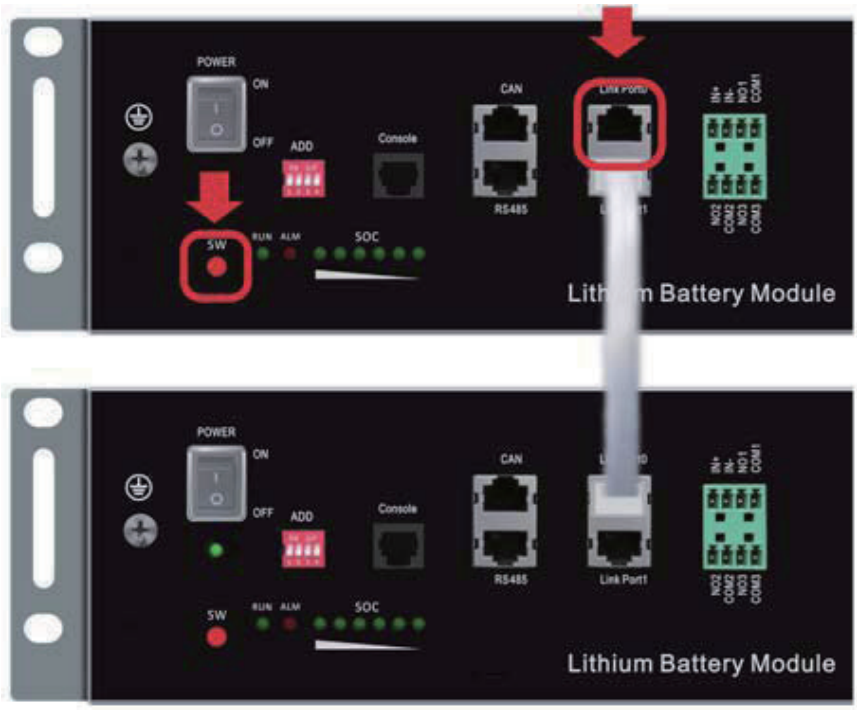

(3) Press the **red button** of **master battery** to power on, all the battery LED light will be on one by one from the Master battery:

If all the battery LED lights on, and then off, which means the battery system is good and working.

C. Installation with bracket:

1. Dismantle the 2 tabs on the battery.

2. Set the battery into 2 pcs **Bracket** from front and back.

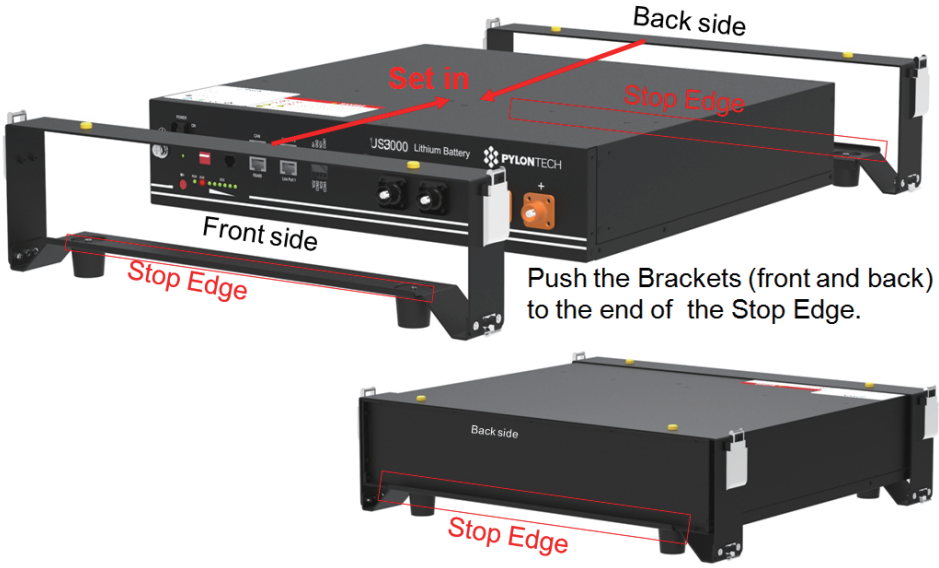

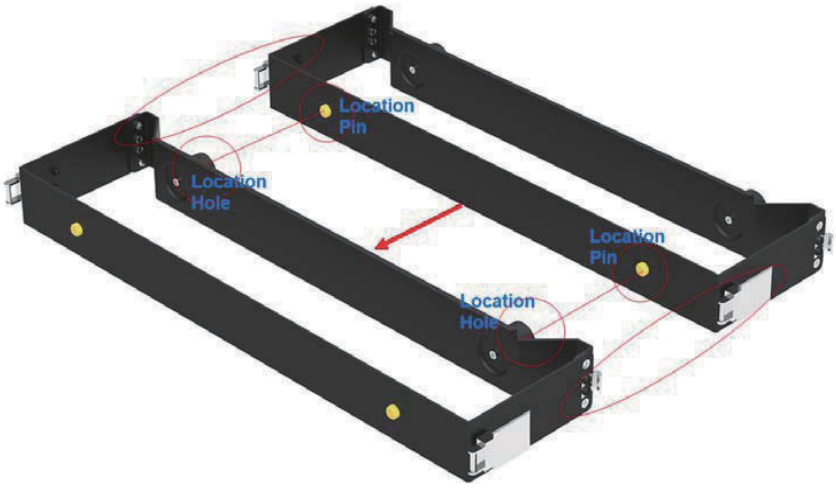

Aim at the 4 pare of Location Pin and Location Hole, stack the batteries together. And hasp the 4 agraffes together.

Maximum 4 batteries can be athwart stacked:

One or two batteries can be sidelong stacked :

Cables connection and batteries system start are same as cabinet installation.

NOTE

After installation, do not forget to register online for full warranty:

http://www.pylontech.com.cn/service/support

NOTE

- **To avoid current pulse of the inverter add on the battery bank. Shall start inverter first or switch on breaker between battery and inverter after all connected batteries turned on.**
- **Between battery bank and inverter should install breaker to protect system safety.**
- **All the installation and operation must follow local electric standard.**

D. Multiple Battery Groups CAN/RS485 Communication Cable Connection

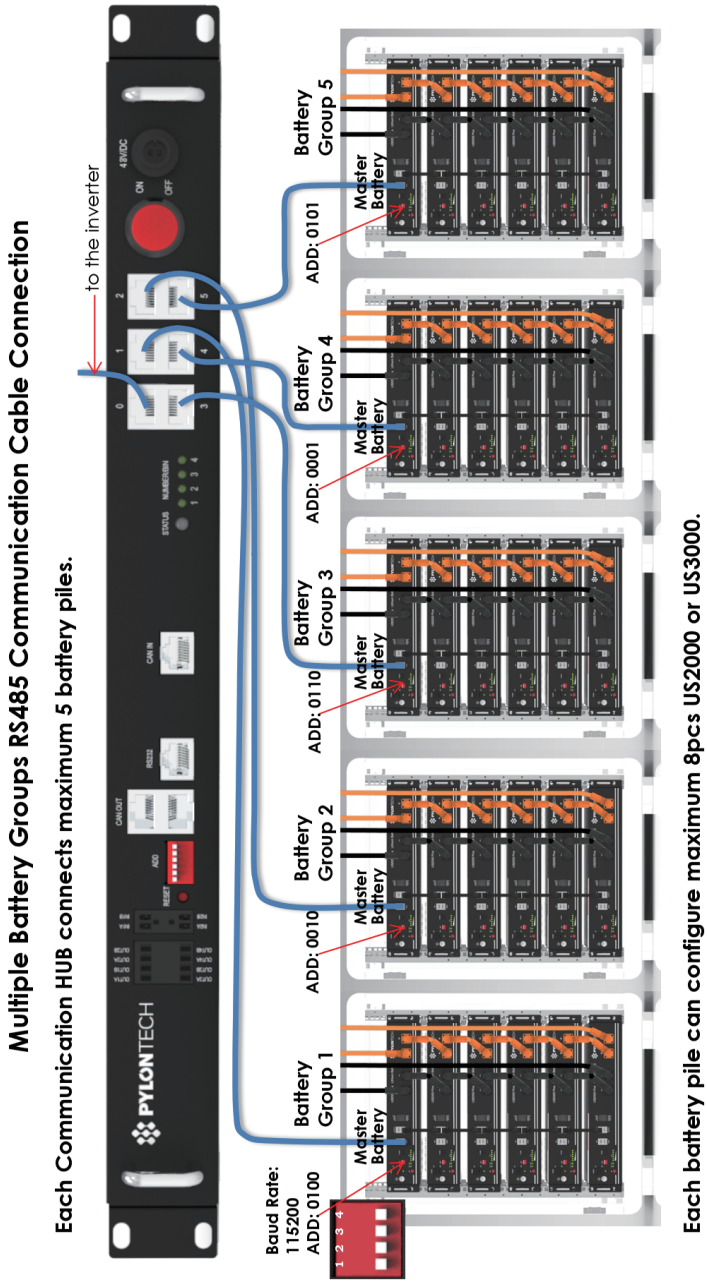

Multiple Battery Groups CAN Communication Cable Connection

Each Communication HUB connects maximum 5 battery piles.

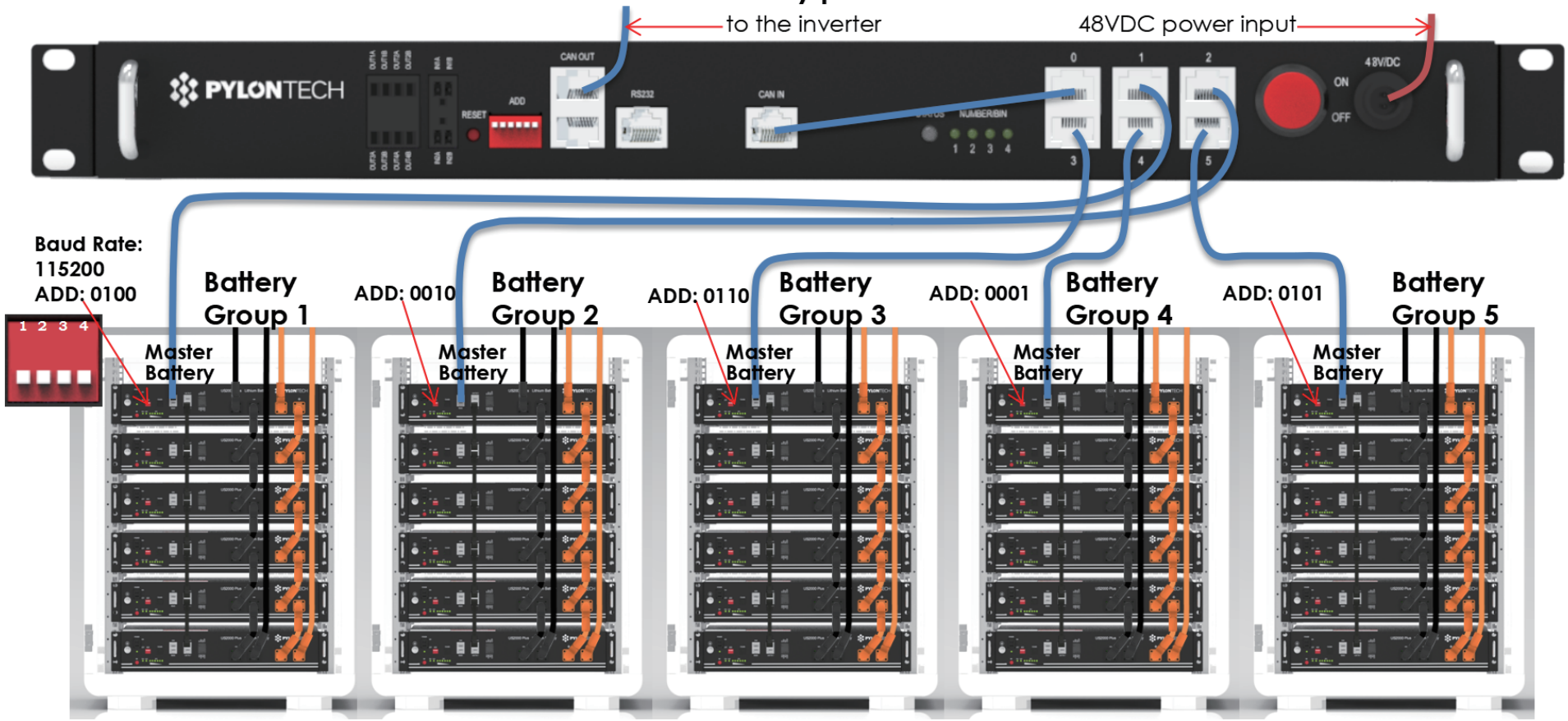

Each battery pile can configure maximum 8pcs US2000 or US3000.

5. Trouble Shooting Steps

5.1 Problem determination based on:

1) Whether the battery can be turned on or not;
2) If battery is turned on, check the red light is off, flashing or lighting;
3) If the red light is off, check whether the battery can be charged/discharged or not.

5.2 Preliminary determination steps:

1) Battery cannot turn on, switch on the lights are all no lighting or flashing.

If the battery external switch is ON, the RUN light is flashing, and the external power supply voltage is 48V or more, the battery still unable to turn on, please contact distributor.

2) *The battery can be turned on, but red light is lighting, and cannot charge or discharge. If the red light is lighting, that means system is abnormal, please check values as following:*

a) Temperature: Above 50℃ or under -10℃, the battery could not work.

Solution: to move battery to the normal operating temperature range between -10℃ and 50℃

b) Current: If current is greater than 100A, battery protection will turn on.

Solution: Check whether current is too large or not, if it is, to change the settings on power supply side.

c) High Voltage: If charging voltage above 54V, battery protection will turn on.

Solution: Check whether voltage is too high or not, if it is, to change the settings on power supply side.

d) Low Voltage: When the battery discharges to 44.5V or less, battery protection will turn on.

Solution: Charge the battery for some time, the red light turn off

Excluding the four points above, if the faulty is still cannot be located, turn off battery and repair.

5.3 The battery cannot be charged or discharged

1) Cannot be charged:

Disconnect the power cables, measure voltage on power side, if the voltage is 53~54V, restart the battery, connect the power cable and try again, if still not work, turn off battery and contact distributor .

2) Unable to discharge:

Disconnect the power cables and measure voltage on battery side, if it is under 44.5V, please charge the battery; if voltage is above 48V and still cannot discharge, turn off battery and contact distributor.

6. Emergency Situations

1) Leaking Batteries

If the battery pack leaks electrolyte, avoid contact with the leaking liquid or gas. If one is exposed to the leaked substance, immediately perform the actions described below.

Inhalation: Evacuate the contaminated area, and seek medical attention.

Contact with eyes: Rinse eyes with flowing water for 15 minutes, and seek medical attention.

Contact with skin: Wash the affected area thoroughly with soap and water, and seek medical attention.

Ingestion: Induce vomiting, and seek medical attention.

2) Fire

NO WATER! Only dry powder fire extinguisher can be used; if possible, move the battery pack to a safe area before it catches fire.

3) Wet Batteries

If the battery pack is wet or submerged in water, do not let people access it, and then contact Pylontech or an authorized dealer for technical support.

4) Damaged Batteries

Damaged batteries are dangerous and must be handled with the utmost care. They are not fit for use and may pose a danger to people or property. If the battery pack seems to be damaged, pack it in its original container, and then return it to Pylontech or an authorized dealer.

NOTE

Damaged batteries may leak electrolyte or produce flammable gas.

In case a damaged battery needs recycling, it shall follow the local recycling regulation (ie. Regulation (EC) N° 1013/2006 among European Union) to process, and using the best available techniques to achieve a relevant recycling efficiency.

Any further questions, please contact Pylontech: service@pylontech.com.cn

Pylon Technologies Co., Ltd.

No. 73, Lane 887, ZuChongzhi Road, Zhangjiang Hi-Tech Park

Pudong, Shanghai 201203, China

T +86-21-51317699 | **F** +86-21-51317698

E service@pylontech.com.cn

W www.pylontech.com.cn