User Manual

F SERIES

This guide describes how to use the inverter. In order to prevent improper operation before use, please carefully read this manual.

Table of Contents

1. Important Notes 2
1.1 Scope 2
1.2 Target Group 2
1.3 Symbols Used 2
1.4 Symbols Explanation 2
2. Safety 3
2.1 Appropriate Usage 3
2.2 PE Connection and Leakage Current 4
2.3 Surge Protection Devices (SPDs) for PV Installation 4
3. About Product 6
3.1 About Inverter 6
3.2 Basic Features 6
3.3 Terminals Introduction 6
3.4 Dimensions 7
4. Technical Data 8
4.1 DC Input 8
4.2 AC Output 8
4.3 Efficiency, Protection and Standard 9
4.4 General Data 10
5. Installation 11
5.1 Packing List 11
5.2 Preparation 12
5.3 Installation Space Required 12
5.4 Tools Required 12
5.5 Installation Steps 13
5.6 Wiring Steps 14
5.7 Earth Connection 17
5.8 Communication Device Installation (Optional) 18
5.9 Inverter Start-Up 23
5.10 Inverter Switch Off 24
6. Operation 25
6.1 Control Panel 25
6.2 Function Tree 26
7. Maintenance 27
7.1 Alarm List 27
7.2 Troubleshooting 29
7.3 Routine Maintenance 29
8. Decommissioning 30
8.1 Dismantling the Inverter 30
8.2 Packaging 30
8.3 Storage and Transportation 30

1. Important Notes

1.1 Scope

This manual describes the assembly, installation, commissioning, maintenance and troubleshooting of the following model(s) of Fox ESS products:

F3000 F3600 F4600 F5000

F5300 F6000 F4600B F5600B

Note: Please keep this manual where it will be accessible at all times.

1.2 Target Group

This manual is for qualified personnel only. The tasks described in this manual need to be performed by professional, suitably qualified technicians only.

1.3 Symbols Used

The following types of safety instructions and general information appear in this document as described below:

	Danger! “Danger” indicates a hazardous situation which, if not avoided, will result in death or serious injury.
	Warning! “Warning” indicates a hazardous situation which, if not avoided, could result in death or serious injury.
	Caution! “Caution” indicates a hazardous situation which, if not avoided, could result in minor or moderate injury.
	Note! “Note” provides important tips and guidance.

1.4 Symbols Explanation

This section explains the symbols shown on the inverter and on the type label:

Symbols	Explanation
	Symbol Explanation CE mark. The inverter complies with the requirements of the applicable CE guidelines.
	Beware of hot surface. The inverter can become hot during operation. Avoid contact during operation.
	Danger of high voltages. Danger to life due to high voltages in the inverter!
	Danger. Risk of electric shock!

	Danger to life due to high voltage. There is residual voltage in the inverter which needs 5 min to discharge. Wait 5 min before you open the upper lid or the DC lid.
	Read the manual.
	Product should not be disposed as household waste.
	PE conductor terminal

2. Safety

2.1 Appropriate Usage

This series inverter is designed and tested in accordance with international safety requirements. However, certain safety precautions must be taken when installing and operating this inverter. The installer must read and follow all instructions, cautions and warnings in this installation manual.

- All operations including transport, installation, start-up and maintenance, must be carried out by qualified, trained personnel.
- The electrical installation & maintenance of the inverter shall be conducted by a licensed electrician and shall comply with local wiring rules and regulations.
- Before installation, check the unit to ensure it is free of any transport or handling damage, which could affect insulation integrity or safety clearances. Choose the installation location carefully and adhere to specified cooling requirements. Unauthorized removal of necessary protections, improper use, incorrect installation and operation may lead to serious safety and shock hazards or equipment damage.
- Before connecting the inverter to the power distribution grid, contact the local power distribution grid company to get appropriate approvals. This connection must be made only by qualified technical personnel.
- Do not install the equipment in adverse environmental conditions such as in close proximity to flammable or explosive substances; in a corrosive environment; where there is exposure to extreme high or low temperatures; or where humidity is high.
- Do not use the equipment when the safety devices do not work or are disabled.
- Use personal protective equipment, including gloves and eye protection during the installation.
- Inform the manufacturer about non-standard installation conditions.
- Do not use the equipment if any operating anomalies are found. Avoid temporary repairs.
- All repairs should be carried out using only approved spare parts, which must be installed in accordance with their intended use and by a licensed contractor or authorized service representative.
- Liabilities arising from commercial components are delegated to their respective manufacturers.
- Any time the inverter has been disconnected from the public network, please be extremely cautious as some components can retain charge sufficient to create a shock hazard. Prior to touching any part of the inverter please ensure surfaces and equipment are under touch safe temperatures and voltage potentials before proceeding.

2.2 PE Connection and Leakage Current

PV System Residual Current Factors

- In every PV installation, several elements contribute to the current leakage to protective earth (PE). these elements can be divided into two main types.
- Capacitive discharge current - Discharge current is generated mainly by the parasitic capacitance of the PV modules to PE. The module type, the environmental conditions (rain, humidity) and even the distance of the modules from the roof can effect the discharge current. Other factors that may contribute to the parasitic capacitance are the inverter's internal capacitance to PE and external protection elements such as lighting protection.
- During operation, the DC bus is connected to the alternating current grid via the inverter. Thus, a portion of the alternating voltage amplitude arrives at the DC bus. The fluctuating voltage constantly changes the charge state of the parasitic PV capacitor (i.e capacitance to PE). This is associated with a displacement current, which is proportional to the capacitance and the applied voltage amplitude.
- Residual current - if there is a fault, such as defective insulation, where an energized cable comes into contact with a grounded person, an additional current flows, known as a residual current.

Residual Current Device (RCD)

- All Fox ESS inverters incorporate a certified internal RCD (Residual Current Device) to protect against possible electrocution in case of a malfunction of the PV array, cables or inverter (DC). The RCD in the Fox ESS inverter can detect leakage on the DC side. There are 2 trip thresholds for the RCD as required by the DIN VDE 0126-1-1 standard. A low threshold is used to protect against rapid changes in leakage typical of direct contact by people. A higher threshold is used for slowly rising leakage currents, to limit the current in grounding conductors for the safety. The default value for higher speed personal protection is 30mA, and 300mA per unit for lower speed fire safety.

Installation and Selection of an External RCD device

- An external RCD is required in some countries. The installer must check which type of RCD is required by the specific local electric codes. Installation of an RCD must always be conducted in accordance with local codes and standards. Fox ESS recommends the use of a type-A RCD. Unless a lower value is required by the specific local electric codes, Fox ESS suggests an RCD value between 100mA and 300mA.
- In installations where the local electric code requires an RCD with a lower leakage setting, the discharge current might result in nuisance tripping of the external RCD. The following steps are recommended to avoid nuisance tripping of the external RCD:

1. Selecting the appropriate RCD is important for correct operation of the installation. An RCD with a rating of 30mA may actually trip at a leakage as 15mA (according to IEC 61008). High quality RCDs will typically trip at a value closer to their rating.
2. Configure the trip current of the inverter' internal RCD to a lower value than the trip current of the external RCD. The internal RCD will trip if the current is higher than the allowed current, but because the internal inverter RCD automatically resets when the residual currents are low it saves the manual reset.

2.3 Surge Protection Devices (SPDs) for PV Installation

WARNING!

Over-voltage protection with surge arresters should be provided when the PV power system is installed. The grid connected inverter is not fitted with SPDs in both PV input side and mains side.

Lightning will cause damage either from a direct strike or from surges due to a nearby strike.

Induced surges are the most likely cause of lightning damage in majority or installations, especially in rural areas where electricity is usually provided by long overhead lines. Surges may impact on both the PV array conduction and the AC cables leading to the building. Specialists in lightning protection should be consulted during the end use application. Using appropriate external lightning protection, the effect of a direct lightning strike into a building can be mitigated in a controlled way, and the lightning current can be discharged into the ground.

Installation of SPDs to protect the inverter against mechanical damage and excessive stress include a surge arrester in case of a building with external lightning protection system (LPS) when separation distance is kept.

To protect the DC system, surge suppression device (SPD type2) should be fitted at the inverter end of the DC cabling and at the array located between the inverter and the PV generator, if the voltage protection level (VP) of the surge arresters is greater than 1100V, an additional SPD type 3 is required for surge protection for electrical devices.

To protect the AC system, surge suppression devices (SPD type2) should be fitted at the main incoming point of AC supply (at the consumer's cutout), located between the inverter and the meter/distribution system; SPD (test impulse D1) for signal line according to EN 61632-1. All DC cables should be installed to provide as short a run as possible, and positive and negative cables of the string or main DC supply should be bundled together.

Avoiding the creation of loops in the system. This requirement for short runs and bundling includes any associated earth bundling conductors. Spark gap devices are not suitable to be used in DC circuits once conducting; they won't stop conducting until the voltage across their terminals is typically below 30 volts.

3. About Product

3.1 About Inverter

This series inverters cover 3kW systems up to 6kW and are integrated with 2 MPP trackers with high efficiency and reliability.

3.2 Basic Features

- Advanced DSP control technology.
- Utilizes the latest high-efficiency power component.
- Optimal MPPT technology.
- Two independent MPP trackers.
- Wide MPPT input range.
- Advanced anti-islanding solutions.
- IP65 protection level.
- Max. Efficiency up to 97.6%. EU efficiency up to 97%. THD<3%.
- Safety & Reliability: Transformerless design with software and hardware protection.
- Export limitation (CT/Meter/DRM0/EMS485).
- Power factor regulation.
- Friendly HMI.
- LED status indications.
- OLED display technical data, human-machine interaction through touch key.
- PC remote control.
- Upgrade through USB interface.

3.3 Terminals Introduction

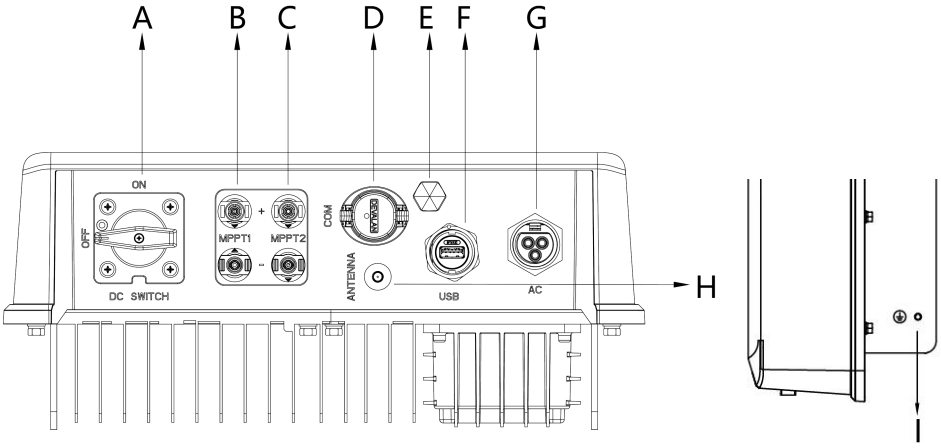

Item	Description	Item	Description
A	DC Switch (Optional)	F	WiFi/GPRS/LAN/4G (Optional)
B	DC Connector	G	AC Connector
C	DC Connector	H	Antenna
D	Communication Port	I	Grounding Screw
E	Waterproof Lock Valve		

Note: Only authorized personnel are permitted to set the connection.

3.4 Dimensions

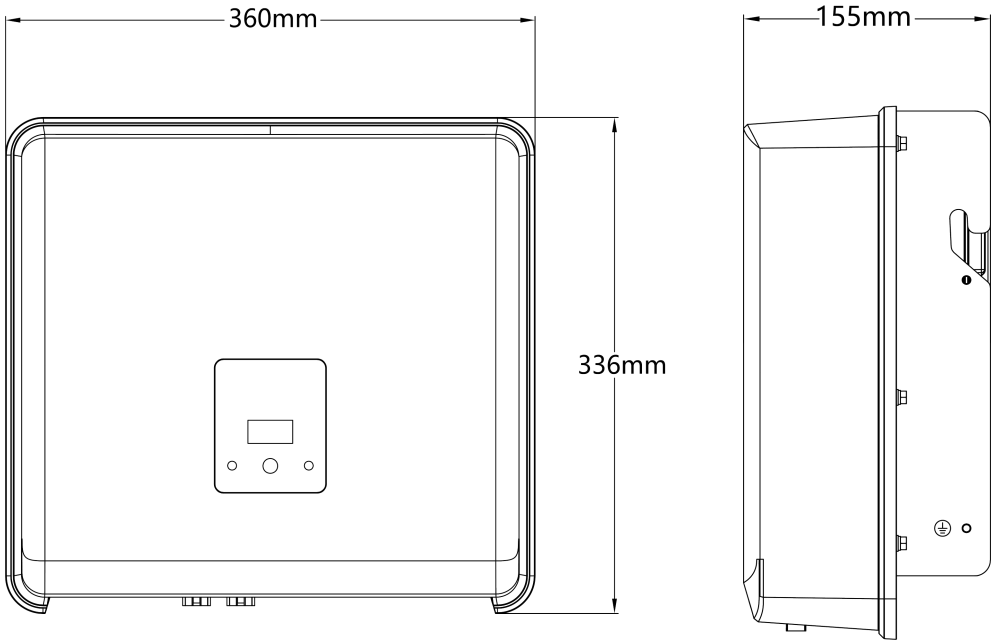

4. Technical Data

4.1 DC Input

Model	F3000	F3600	F4600	F5000	F5300	F6000	F4600B	F5000B
Max. PV array power [W]	6000	7200	9200	10000	10600	12000	9200	10000
Max. input voltage [V]	600	600	600	600	600	600	600	600
Nominal voltage [V]	360	360	360	360	360	360	360	360
MPP voltage range [V]	60-550	60-550	60-550	60-550	60-550	60-550	60-550	60-550
MPP voltage range (full load) [V]	90-550	100-550	130-550	140-550	150-550	160-550	130-550	140-550
Max. input current [A]	20/20	20/20	20/20	20/20	20/20	20/20	20/20	20/20
Isc PV [A]	26/26	26/26	26/26	26/26	26/26	26/26	26/26	26/26
Start-up voltage of LED [V]	60	60	60	60	60	60	60	60
Start-up voltage of operation [V]	80	80	80	80	80	80	80	80
No. of MPP trackers	2	2	2	2	2	2	2	2
Strings per MPP tracker	1+1	1+1	1+1	1+1	1+1	1+1	1+1	1+1
Max. inverter backfeed current to the array(mA)	0							

4.2 AC Output

Model	F3000	F3600	F4600	F5000	F5300	F6000	F4600B	F5000B
Rated power [W]	3000	3600	4600	5000	5300	6000	4600	5000
Max. apparent power [VA]	3300/ 3000[1]	3960/ 3600[1]	5060 /4600[1]	5500/ 5000[1]	5830/ 5300[1]	6600/ 6000[1]	4600/ 4600[2]	5000/ 5000[2]
Nominal voltage [V]	220V/230V/240V							
Nominal frequency [Hz]	50/60							
Rated output current [A][3]	13.6	16.4	20.9	22.7	24.1	27.3	20.9	22.7
Max. output current [A][3]	15.0	18.0	23.0	25.0	26.5	30.0	20.9	22.7
Inrush current [A]	7.9A@50us							
Max. output fault current [A]	167A@10us							
Max. output overcurrent protection	75A							
Power factor	1 (Adjustable from 0.8 leading to 0.8 lagging)							
THDI	<3%@rated power							

[1] Only for Spanish market;

[2] For other countries;

[3] Rated output current and Max. output current are calculated using a nominal voltage of 220V.

4.3 Efficiency, Protection and Standard

Model	F3000	F3600	F4600	F5000	F5300	F6000	F4600B	F5000B
Max. MPPT efficiency	99.80%	99.80%	99.80%	99.90%	99.90%	99.90%	99.80%	99.90%
European efficiency	96.80%	96.80%	96.80%	97.00%	97.00%	97.00%	96.80%	97.00%
Max. efficiency(@rated voltage)	97.60%	97.60%	97.60%	97.60%	97.60%	97.60%	97.60%	97.60%
Protection								
PV Reverse Polarity Protection	Yes							
Anti-islanding protection	Yes							
Insulation monitoring	Yes							
Residual current monitoring	Yes							
AC short-circuit protection	Yes							
AC Output over current protection	Yes							
AC Output over voltage protection	Yes							
Surge protection	Type Ⅱ (DC) and Type Ⅱ (AC)							
Temperature protection	Yes							
Integrated DC switch	Yes							
AFCI Protection	Optional							
Night mode	Optional							
STANDARD								
Certification	IEC62109, PORTARIA N° 140 2022, IEC61727, IEC61000-6-1/3							

4.4 General Data

Model	F3000	F3600	F4600	F5000	F5300	F6000	F4600B	F5000B
Dimensions [W*H*D] [mm]	360*336*155							
Net weight	≤9.5KG							
Cooling principle	Natural							
Protective class	Ⅰ							
Ingress protection	IP65							
Inverter topology	Non-isolated							
Overvoltage category	III(AC), II(DC)							
Noise emission [dB]	<30							
Altitude(m)	3000m							
Operation temperature range[℃]	-25... +60°C (derating at +45°C)							
Storage temperature [℃]	-40... +70°C							
Humidity	0-100% (no condensation)							
Self consumption(night) [W]	＜1W（without night mode）, ＜3W（with night mode）							
Pollution degree	Ⅱ(internal), Ⅲ(external)							
Monitoring module (optional)	WiFi/Bluetooth							
Maximum Power(EIRP)	Bluetooth: 8.68dBm WiFi: 18.44dBm							
Frequency range	Bluetooth: 2402-2480MHz WiFi: 2412-2472MHz							
Communication interface	Meter/CT/RS485/DRM(for AU only)							
Display	OLED, LED, App, Website							

5. Installation

5.1 Packing List

Please un-pack the box, check and make sure you received all items as listed below before installation (excluding optional items):

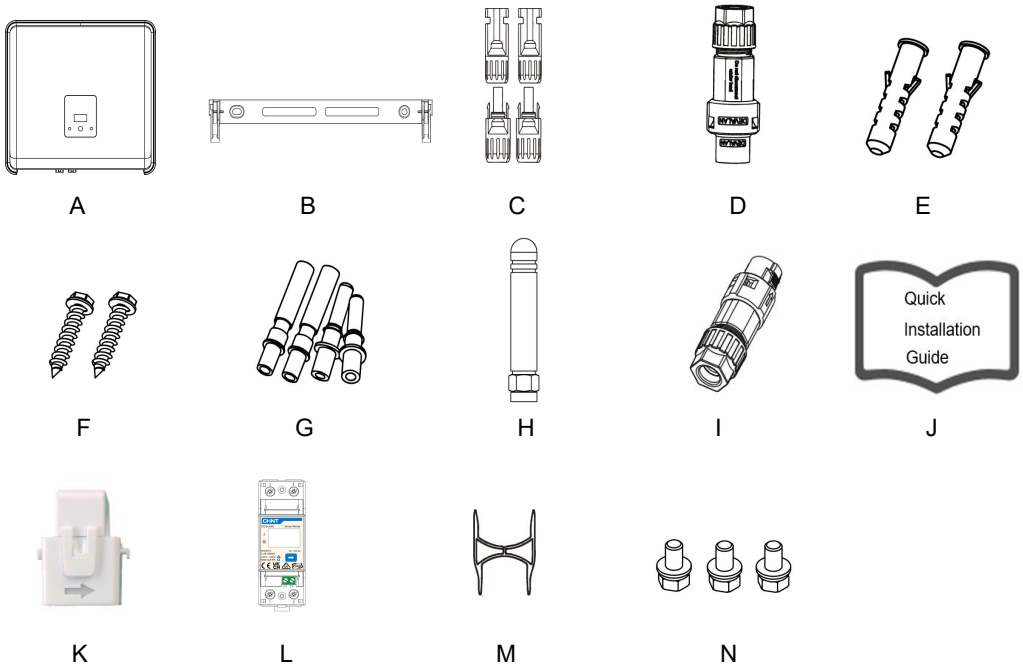

Object	Quantity	Description	Object	Quantity	Description
A	1	Inverter	H	1	Antenna
B	1	Bracket	I	1	Communication connector
C	4	DC connector (F/M)	J	1	Quick installation guide
D	1	AC connector	K	1	CT (optional)
E	2	Expansion tube	L	1	Meter (optional)
F	2	Expansion screw	M	2	Unlock tool
G	4	DC pin contact (2*positive, 2*negative)	N	3	Screws

5.2 Preparation

- Please refer to the Technical Data to make sure the environmental conditions fit the inverter's requirements (degree of protection, temperature, humidity, altitude, etc.)
- Please avoid direct sunlight, rain exposure and snow build-up during installation and operation.
- To avoid overheating, always make sure the air flow around the inverter is not blocked.
- Do not install in places where gas or flammable substances may be present.
- Avoid electromagnetic interference that can compromise the correct operation of electronic equipment.
- The slope of the wall should be within ±5°.

• Outdoor Installation

The ingress protection rating for this product is IP65 and it is therefore suitable for outdoor use. Locations fully exposed to precipitation and/or extended periods of exposure to direct sunlight should, where possible, be avoided. Locations where there is some direct exposure to the elements, or where complete protection cannot be achieved, are permissible and will not impact upon warranty claims providing reasonable measures have been taken. For more clarification, please contact your local Fox ESS service team.

5.3 Installation Space Required

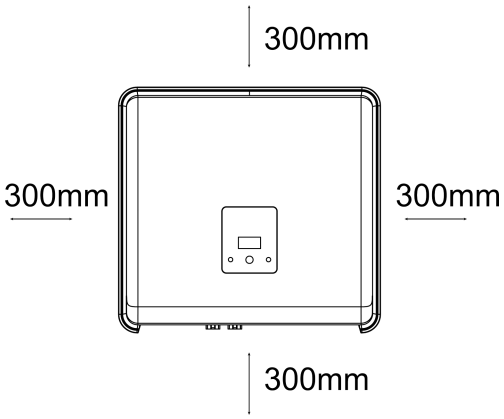

Position	Min Size
Left	300mm
Right	300mm
Top	300mm
Bottom	300mm
Front	300mm

5.4 Tools Required

- Manual wrench;
- Electric drill (drill bit set 8mm);
- Crimping pliers;
- Stripping pliers;
- Screwdriver.

5.5 Installation Steps

Step 1: Fix the bracket on the wall

- Choose the place you want to install the inverter. Place the bracket on the wall and mark the position of the 3 holes from bracket.

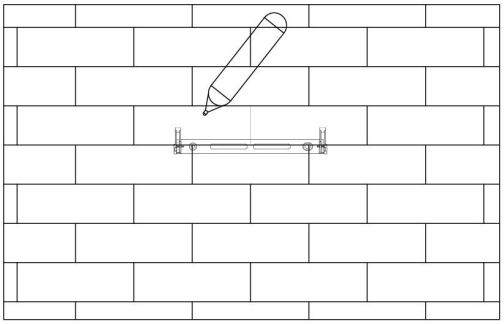

- Drill holes with electric drill, make sure the holes are at least 50mm deep, and then tighten the expansion tubes.

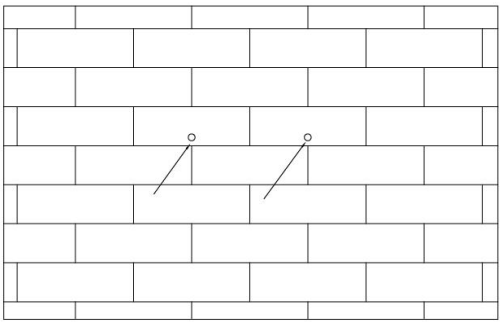

- Insert the expansion tubes into the holes and tighten them. Install the bracket with the expansion screws.

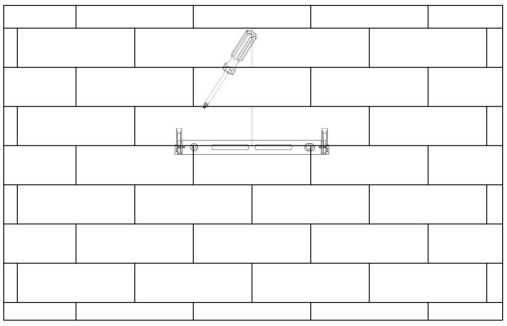

Step 2: Match the inverter with wall bracket

- Hang the inverter over the bracket, slightly lower the inverter, and make sure the 2 mounting bars on the back are fixed with the 2 grooves from bracket properly.

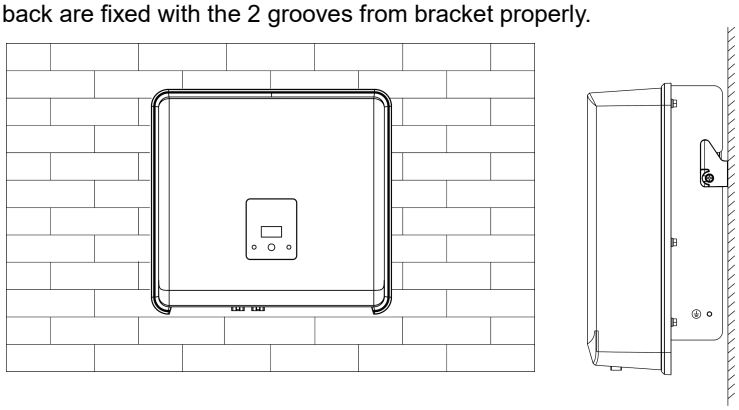

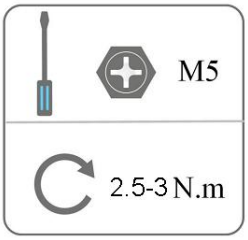

5.6 Wiring Steps

Step 1: PV String Connection

This series inverters can be connected with 2-strings of PV modules. Please select suitable PV modules with high reliability and quality. Open circuit voltage of module array connected should be less than 600V, and operating voltage should be within the MPPT voltage range.

	Note! Please choose a suitable external DC switch if the inverter does not have a built-in DC switch.
	Warning! PV module voltage is very high and within a dangerous voltage range, please comply with the electric safety rules when connecting.
	Warning! Please do not make PV positive or negative to ground!
	Note! PV modules – please ensure they are the same type, have the same output and specifications, are aligned identically, and are tilted to the same angle. In order to save cable and reduce DC loss, we recommend installing the inverter as near to the PV modules as possible.

Note: PV connection mode below is not allowed.

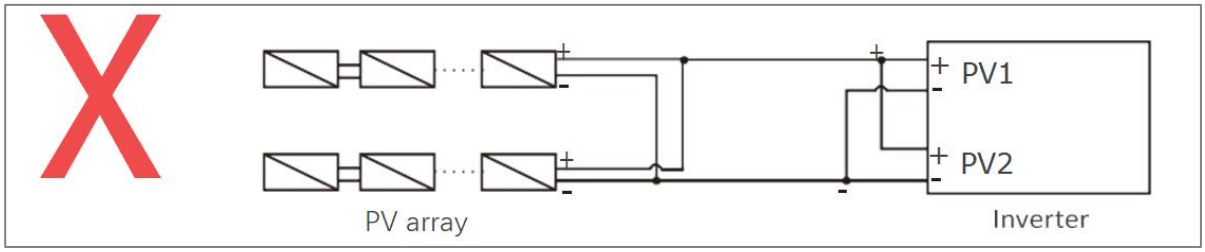

Step 2: DC Wiring

- Turn off the DC switch.
- Choose 10 AWG wire to connect the PV module.
- Trim 6mm of insulation from the wire end.

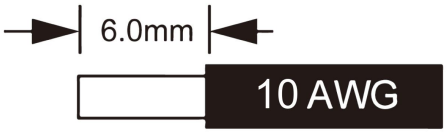

- Separate the DC connector as below.
-

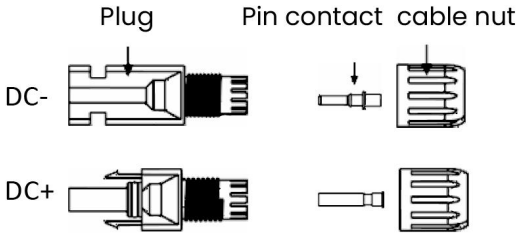

- Insert striped cable into pin contact and ensure all conductor strands are captured in the pin contact.
- Crimp pin contact by using a crimping plier. Put the pin contact with striped cable into the corresponding crimping pliers and crimp the contact.

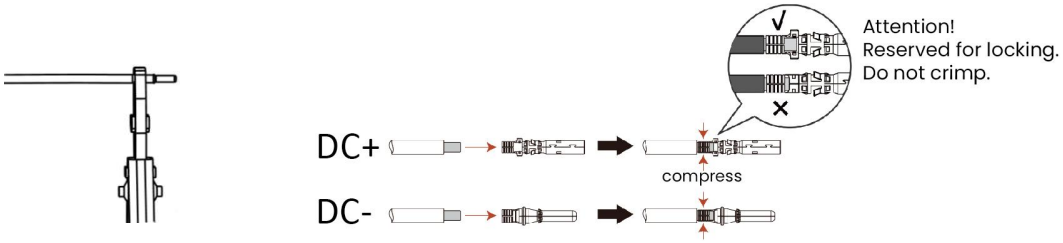

- Insert pin contact through the cable nut to assemble into back of the male or female plug. When you feel or hear a “click” the pin contact assembly is seated correctly.

- Unlock the DC connector
  - Use the specified wrench tool.
  - When separating the DC + connector, push the tool down from the top.
  - When separating the DC - connector, push the tool down from the bottom.
  - Separate the connectors by hand.

- Grid Connection

  This series inverters are designed for single-phase grid. Voltage range is 220/230/240V; frequency is 50/60Hz. Other technical requests should comply with the requirement of the local public grid.

Model (kW)	3.0	3.6	4.6	5.0	5.3	6.0
Cable	4mm²	4mm²	6mm²	6mm²	6mm²	6mm²
Micro-Breaker	25A	25A	40A	40A	40A	40A

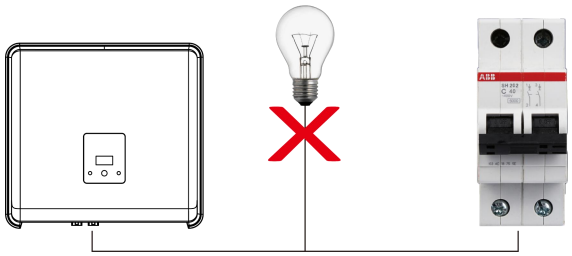

WARNING!

A micro-breaker for max output overcurrent protection device shall be installed between inverter and grid, and the current of the protection device is referred to the table above, any load SHOULD NOT be connected with the inverter directly.

Step 3: AC Wiring

- Check the grid voltage and compare with the permitted voltage range (refer to technical data).
- Disconnect the circuit-breaker from all the phases and secure against reconnection.
- Trim the wires:
  - Trim all the wires to 52.5mm and the PE wire to 55mm.
  - Use the crimping pliers to trim 12mm of insulation from all wire ends as below.

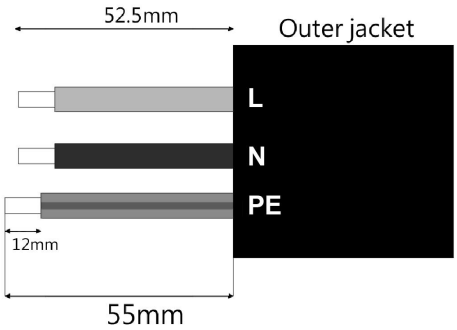

L: Black/Brown/Grey Wire

N: Blue Wire

PE: Yellow & Green Wire

Note: Please refer to local cable type and color for actual installation.

- Separate the AC plug into three parts as below.
  - Hold middle part of the female insert, rotate the back shell to loosen it, and detach it from female inset.
  - Remove the cable nut (with rubber insert) from the back shell.

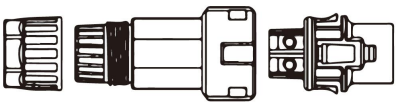

- Slide the cable nut and then the back shell onto the cable.

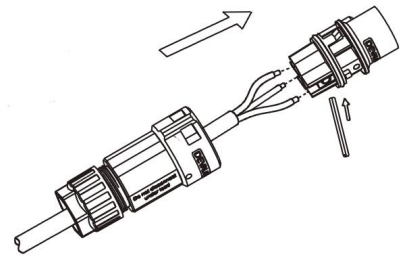

- Push the threaded sleeve into the socket, tighten up the cap on the terminal.

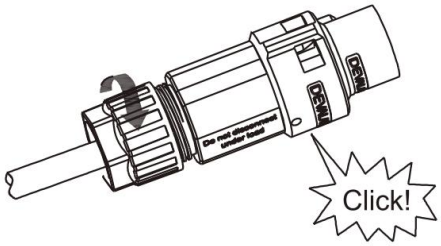

- Push the threaded sleeve to connection terminal until both are locked tightly on the inverter.

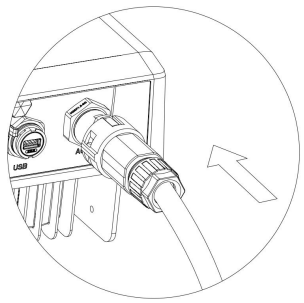

- Remove the AC connector, press the bayonet out of the slot with a small screwdriver or the unlock tool and pull it out, or unscrew the threaded sleeve, then pull it out.

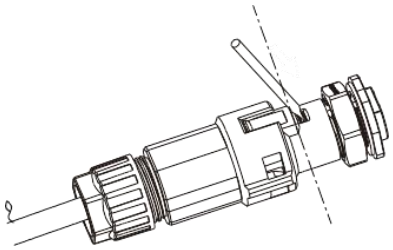

5.7 Earth Connection

Screw the ground screw with screwdriver as shown below:

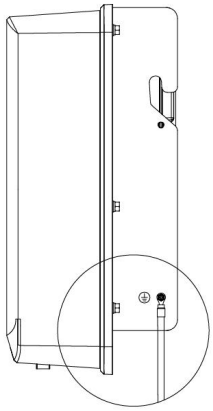

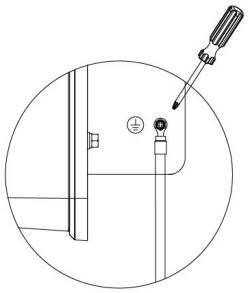

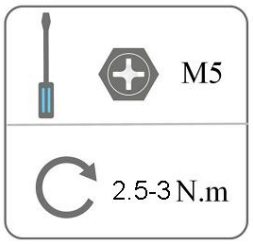

5.8 Communication Device Installation

WiFi Configuration：

This device has an integrated WiFi module inside. Please plug in the antenna before connecting to the network. After the inverter is powered on, you can start to connect to the network. Please scan the following QR code to get the detailed operation steps for network connection.

Note: This QR code contains app download path and configuration process.

- Export limitation setting:

Short press the touch key to switch display or make the number+1. Long press the touch key to confirm your setting. There are three options in Set CTmode: Disable/CT/Meter, Please select according to the actual situation and then it will ask you to set the parameters(Long press for confirmation and switching to next digit, short press for changing the value).

Note: CT or Smart meter is required for export limitation function.

- CT (optional) (EM-EICT-120K-T210C or CTSA016)

This inverter has an integrated export management function. To enable this function, a power meter or CT must be installed. The CT should be clamped on the main live line of the grid side. The arrow on the CT should be pointing towards the grid. The white cable connects to CT+, and the black cable connects to CT-.

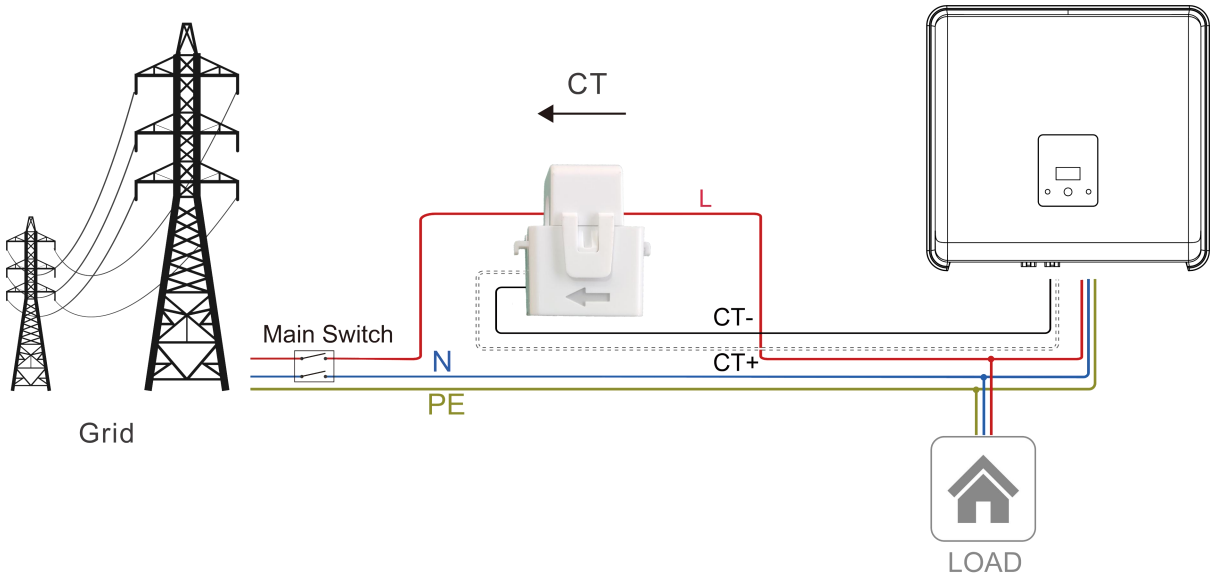

	Note! For a precise reading and control of power, a meter can be used instead of a CT. If the CT is fitted in the wrong orientation, anti-backflow function will fail.

- Meter (optional) (Eastron-SDM230-Modbus / DDSU666)*

The inverter has integrated export limitation functionality. To use this function, a power meter or a CT must be installed. For Meter installation, please install it on the grid side.

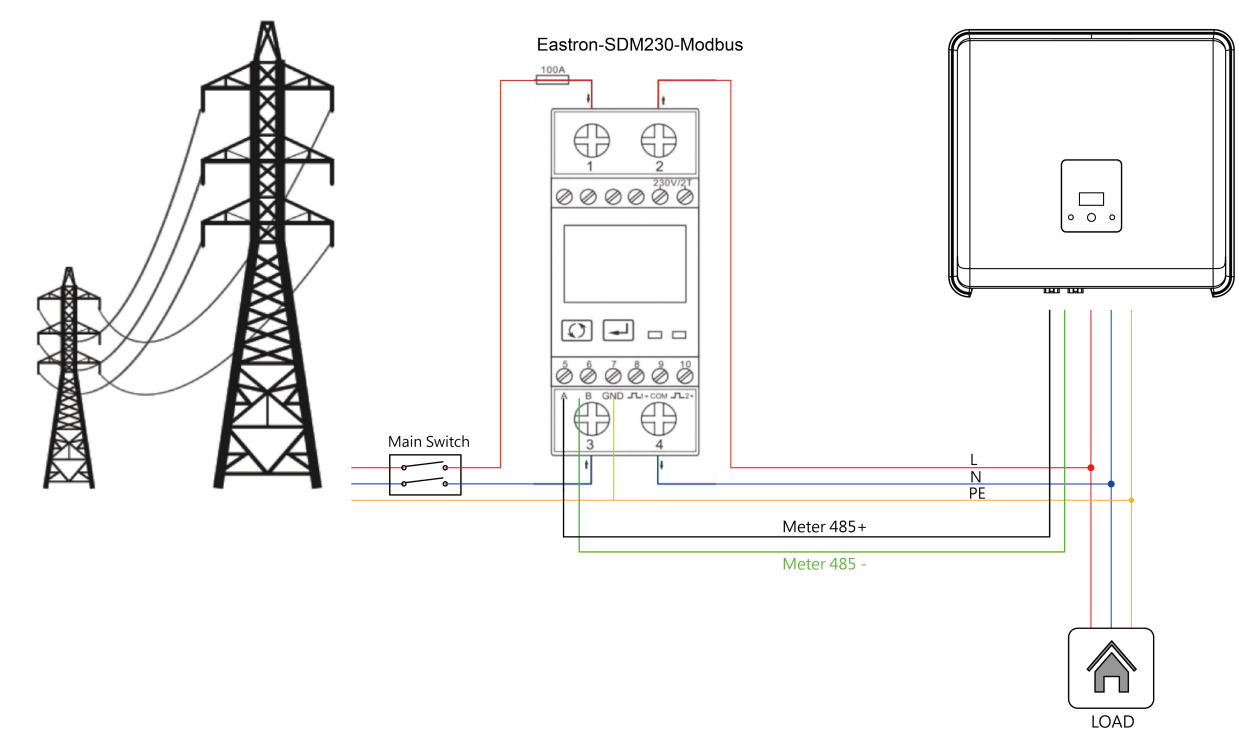

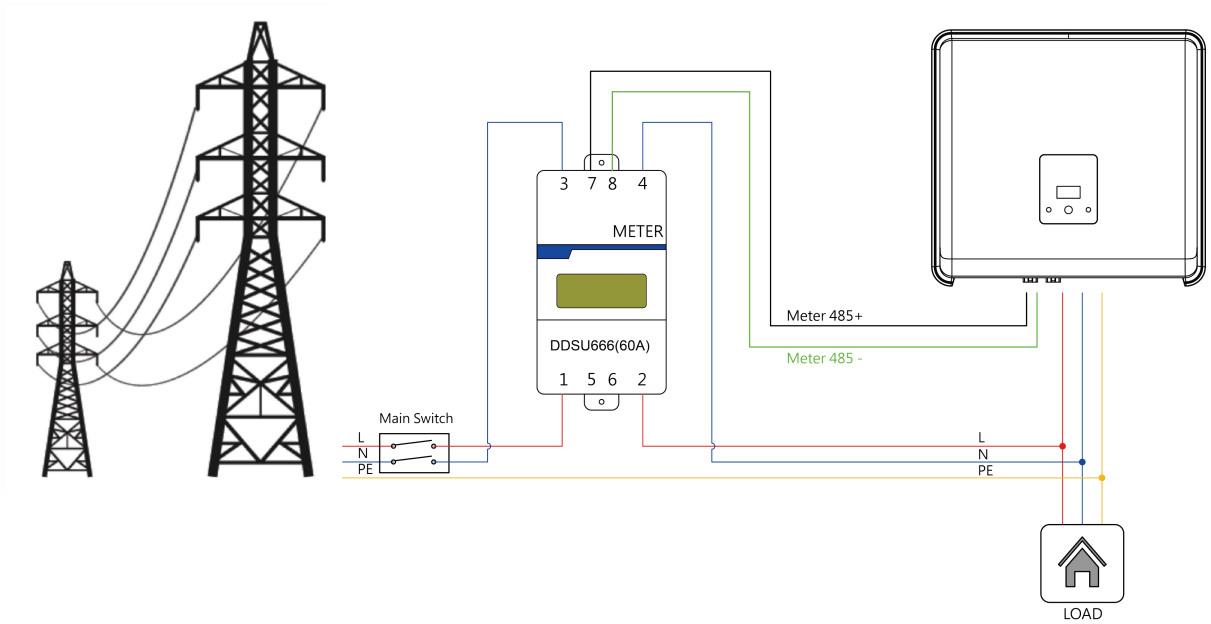

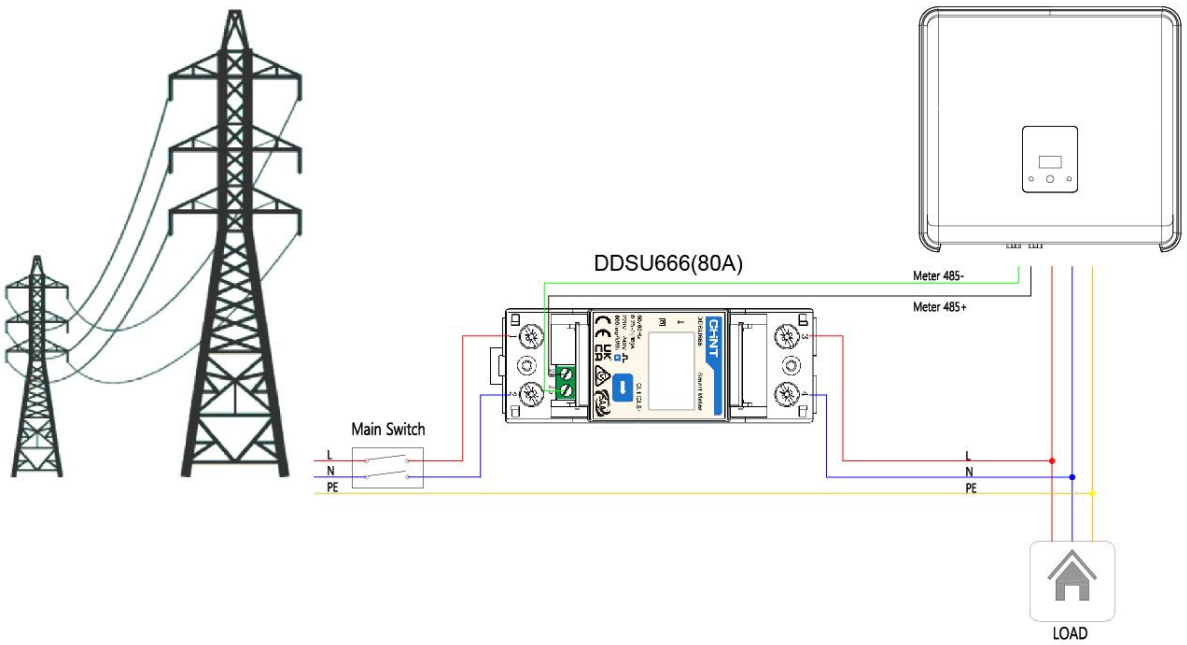

*Note: Night mode machines will only work with meters.

- DRM0

Model	Socket asserted by shorting pins		Function
DRM0	5	6	Operate the disconnection device.

The PIN definitions of CT/RS485/DRM0 interface are as below.

8 PIN:

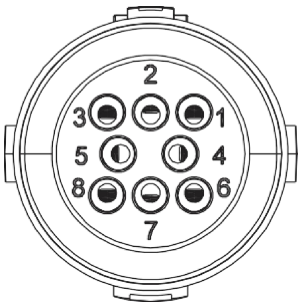

PIN	1	2	3	4	5	6	7	8
Definition	CT+	CT-	METER 485-	METER 485+	RefGen	COM/ DRM0	RS485-	RS485+

16 PIN:

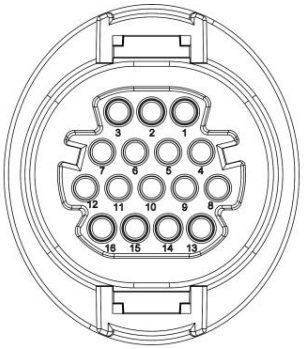

PIN	Definition	Feature description
1	Ex485B	EMS485 communication port
2	Ex485A	
3	METER 485-	Meter communication port
4	METER 485+	
5	\	
6	Parallel RS485B	Parallel communication port
7	Parallel RS485A	
8	\	
9	DRM_1/5	Multiplexed port, compatible with DRM
10	DRM_2/6	
11	DRM_3/7	
12	DRM_4/8	
13	RefGen	
14	COM/DRM0	
15	CT+	CT port
16	CT-	

- Upgrade

Users can upgrade the firmware of the inverter via a U-disk.

Preparation

Please ensure the inverter is steadily powered on.

Inverter must remain powered through whole procedure of upgrading. Prepare a PC and make sure the size of U-disk is under 32G, and the format is fat 16 or fat 32.

NOTE
Note! Please DO NOT apply USB3.0 on inverter USB port, the inverter USB port only support for USB2.0.

Upgrading steps:

Step 1: Please contact our service support to get the update files, and extract it into your U-disk as follows:

Master: “Update\Master\xxx_Master_Vx.xx.bin”

Warning
Warning! Make sure the directory is in accordance with above form strictly! Do not modify the program file name, or it may cause the inverter not work anymore!

Slave: “Update\Slave\xxx_Slave_Vx.xx.hex”

Manager: “Update\Manager\xxx_manager_Vx.xx. hex”

AFCI: “Update\AFCI\xxx_AFCI_Vx.xx. hex”

Note: Vx.xx is version number.

Warning: Make sure the directory structure is strictly in accordance with above! Do not modify the program file name, or it may cause the inverter to cease working.

Step 2: Unplug the monitoring device from the "WiFi/4G/USB" port and insert U-disk into the "WiFi/4G/USB" port at the bottom of the inverter.

Step 3: The LCD will show update information. Then shortly press touch key to select the firmware that you want to upgrade and press touch key for 5 seconds to confirm the upgrade.

Step 4: Wait for few minutes until the upgrade is finished. The LCD will go back to the first page and show “Upgrade Master”. Pull out the U-disk and check if the firmware version is the correct one. Please remember to insert the monitoring device.

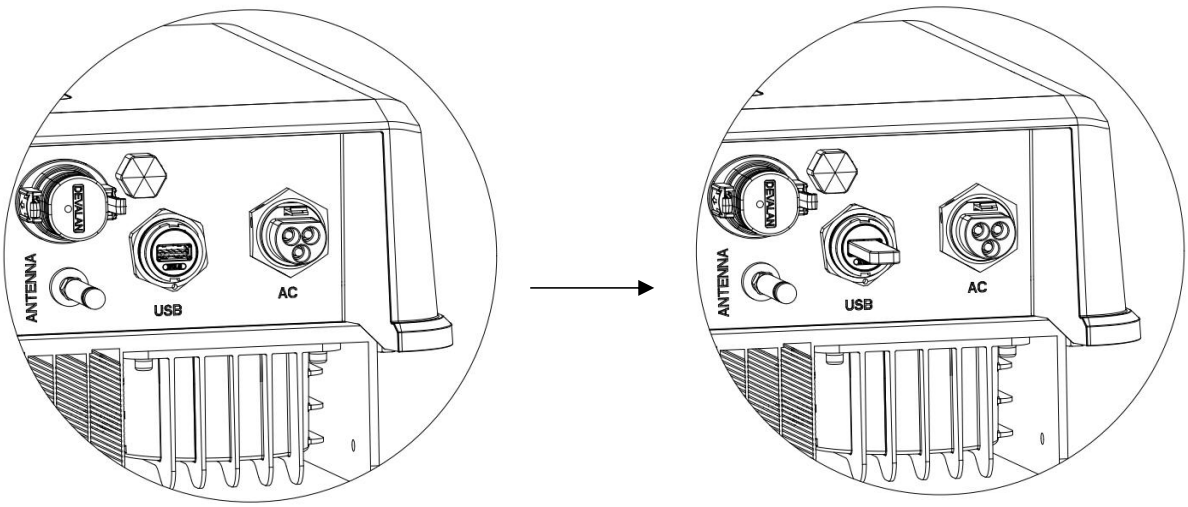

- Isolation Fault (Australia Market Only)

This inverter complies with IEC 62109-2 clause 13.9 for earth fault alarm monitoring. If an Earth Fault Alarm occurs, the fault code Isolation fault will be displayed on the inverter screen and the RED LED indicator will light up. The inverter should be installed in a high traffic area so the alarm will be noticed.

5.9 Inverter Start-Up

Please refer to the following steps to start-up the inverter:

a) Check if device is fixed well on the wall;

b) Make sure all DC breakers and AC breakers are disconnected;

c) Ensure AC cable is connected to the grid correctly;

d) All PV panels are connected to inverter correctly; DC connectors that are not used should be sealed by cover;

e) Turn on the external AC and DC connectors;

f) Turn the DC switch to the “ON” position (if equipped with DC switch on the inverter).

If the LED is not green, please check the below:

- All the connections are correct.
- All the external disconnect switches are closed.
- The DC switch of the inverter is in the “ON” position.

Note:

- When starting the inverter for the first time, the country code will be set by default to the local settings. Please check if the country code is correct.
- Set the time on the inverter using the button or by using the APP.

Below are the three possible inverter states indicating that the inverter has started up successfully.

Waiting: Inverter is waiting to check the DC input voltage from panels is greater than 60V (lowest start-up voltage) but less than 80V (lowest operating voltage), display will indicate the Waiting status and green LED will flash.

Checking: Inverter will check DC input environment automatically when DC input voltage from the PV panels exceeds 80V and PV panels have enough energy to start inverter, display will indicate the Checking status and green LED will flash.

Normal: Inverter begins to operate normally with green light on. Meanwhile feedback energy to grid, OLED displays present output power.

Note: You can go to the setting interface on the display to follow the instructions if it is the first time to start up.

- **Complete inverter Start-up guide**

After the initial start-up the inverter, display will go to the language settings page, short press to switch language and long press to confirm selection. Once language set, display will guide to set the safety regulation. Short press to switch safety regulation (Please select the Region A/B/C, please confirm with local grid company on which Region to select), and long press to confirm selection. When Region is selected, the inverter loads all the Region values for power quality response modes and grid protection settings. After the initial commission, the setting will be locked and the Country code and Power Quality Response Mode will be viewed only.

Note: *Australia only

			Region A	Region B	Region C	NZ
VOLT-WATT	Voltage	Vw1	253V	250V	253V	242V
		Vw2	260V	260V	260V	250V
	(P)% OF Srated	Vw1	100%	100%	100%	100%
		Vw2	20%	20%	20%	20%
VOLT-VAR	Voltage	Vv1	207V	205V	215V	207V
		Vv2	220V	220V	230V	220V
		Vv3	240V	235V	240V	235V
		Vv4	258V	255V	255V	244V
	(P)% OF Srated	Vv1	44% Supplying	30% Supplying	44% Supplying	60% Supplying
		Vv2	0%	0%	0%	0%
		Vv3	0%	0%	0%	0%
		Vv4	60% Absorbing	40% Absorbing	60% Absorbing	60% Absorbing
Fixed PF	Fixed PF	Default	1	1	1	1
		Range	-0.8~0.8	-0.8~0.8	-0.8~0.8	-0.8~0.8
Reactive power	Reactive power	Default	0	0	0	0
		Range	-60%~60%	-60%~60%	-60%~60%	-60%~60%
Power Rate Limit	Wgra+	Default	16%	16%	16%	16%
		Range	5%-100%	5%-100%	5%-100%	5%-100%
	Wgra-	Default	16%	16%	16%	16%
		Range	5%-100%	5%-100%	5%-100%	5%-100%
Protection Setting	10 Mins Voltage	V	258V	258V	258V	249V
Freq Derate set	OVF	START	50.25Hz	50.15Hz	50.5Hz	50.2Hz
		STOP	52HZ	52Hz	53Hz	52Hz
	UNF	START	49.75Hz	49.85Hz	49.5Hz	49.8Hz
		STOP	48Hz	48Hz	47Hz	48Hz

Note!

Please set-up the inverter if it is the first time to start-up. The above steps are for the regular start-up of the inverter. If it is the first time to start up the inverter, you need to carry-out the initial set-up of the inverter.

Warning!

Power to the unit must be turned on only after installation work has been completed.

All electrical connections must be carried out by qualified personnel in accordance with legislation in force in the country of installation.

5.10 Inverter Switch Off

Please follow the below steps to switch off the inverter:

a) Switch off the inverter AC isolation switch.

b) Switch off the DC isolation switch and allow 5 minutes for the inverter to power down completely.

6. Operation

6.1 Control Panel

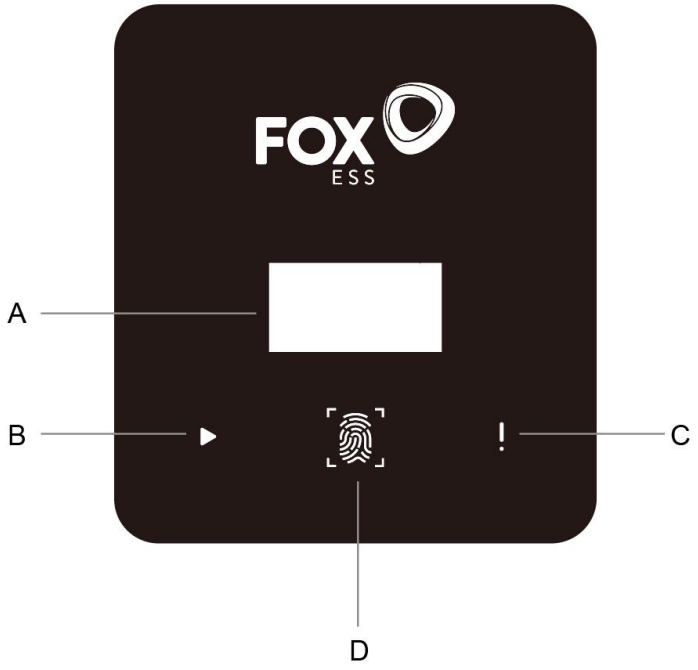

Object	Name	Function
A	OLED Screen	Display the information of the inverter.
B	Indicator LED	Green: The inverter is in normal state.
C		Red: The inverter is in fault mode.
D	Touch Key	The touch key is used to set the OLED to display different parameters. Press time <1s (short press): Next; Press time >2s (long press): Enter. Wait time 15s: Return to start.

6.2 Function Tree

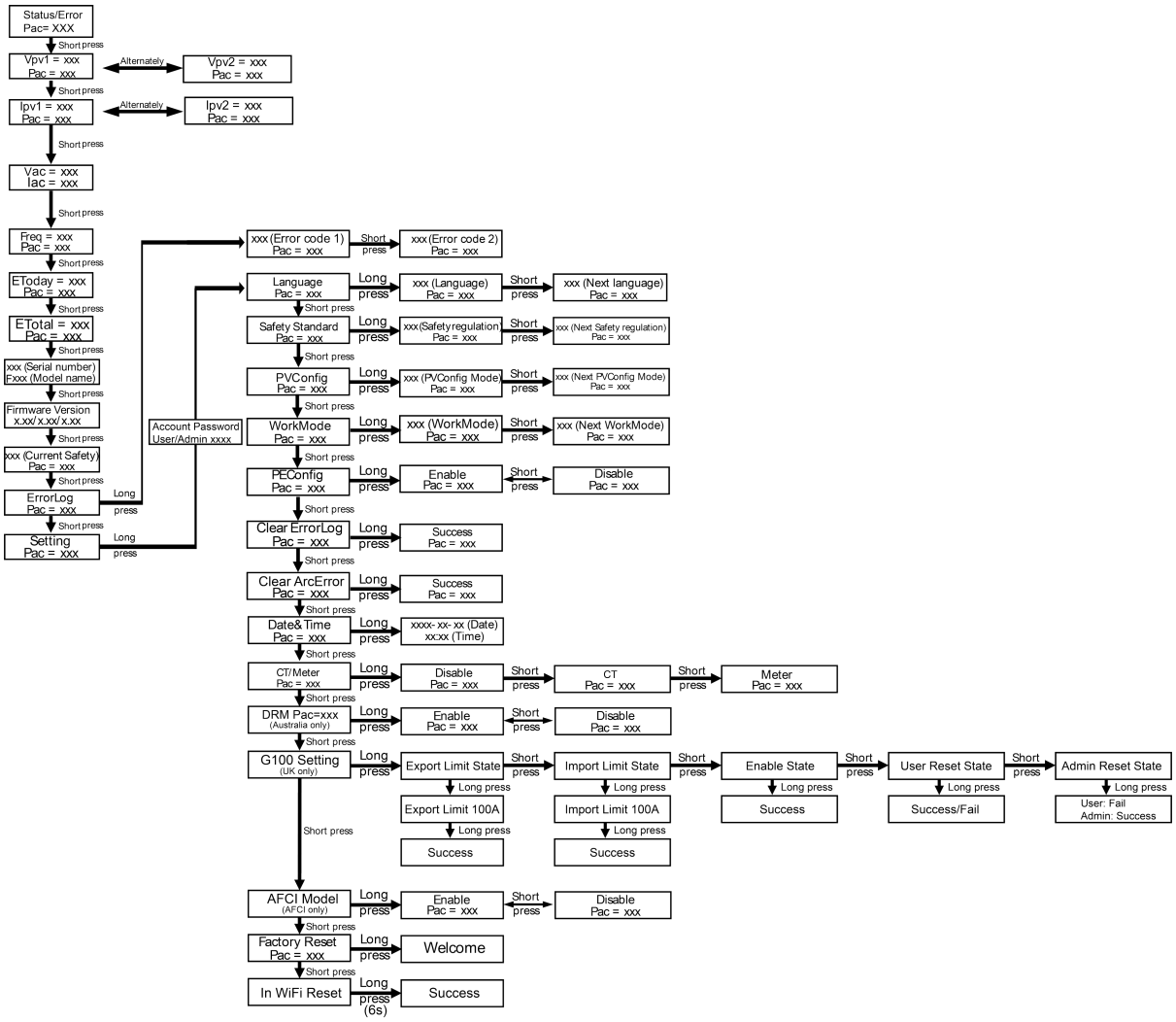

Note:

- Short press to select, long press to confirm .
- The default password is "3210". Please let qualified installer or distributor to do the settings, end users are not recommended to do the settings.

7. Maintenance

This section contains information and procedures for solving possible problems with the inverters and provides you with troubleshooting tips to identify and solve most problems that can occur.

7.1 Alarm List

Fault Code	Solution
SPS Fault	- Turn off the PV and grid, reconnect them. - Please seek for help from us if it does not go back to normal state.
DCI Fault	- Wait for one minute after the inverter reconnects to grid. - Disconnect PV (+), PV (-) with DC. - After the OLED switches off, reconnect and check again. - Please seek for help from us if it does not go back to normal state.
EEPROM Fault	- Disconnect PV (+), PV (-) with DC. - After the OLED switches off, reconnect and check again. - Please seek for help from us if it does not go back to normal state.
GFCI Fault	- Disconnect DC and AC connector, check the surrounding equipment on the AC side. - Reconnect the input connector and check the state of inverter after troubleshooting. - Please seek for help from us if it does not go back to normal state.
GFCD Fault	- Disconnect PV (+), PV (-) with DC. - After the OLED switches off, reconnect and check again. - Please seek for help from us if it does not go back to normal state.
Grid 10Min OVP	- System will reconnect if the grid is back to normal. - Or seek for help from us if it does not go back to normal state.
Grid Freq Fault	- Wait for one minute, grid may go back to normal working state. - Make sure that grid voltage and frequency complies with standards. - Or please seek for help from us.
Grid Lost Fault	- Please check grid-connection, e.g., wires, interface etc. - Checking grid usability. - Or seek for help from us.
VGridTransient Fault	- Disconnect PV (+), PV (-) with DC. - After the OLED switches off, reconnect and check again. - Please seek for help from us if it does not go back to normal state.
Fault Code	**Solution**
Grid Voltage Fault	- Wait for one minute, grid may go back to normal working state. - Make sure that grid voltage and frequency complies with standards. - Or, please seek for help from us.

Consistent Fault	- Disconnect PV (+), PV (-) with DC. - After the OLED switches off, reconnect and check again. - Please seek for help from us if it cannot go back to normal state.
Isolation Fault	- Check the impedance among PV (+), PV (-) and ground. Impedance should be >1Mohm. - Please seek for help from us if it cannot be detected or the impedance is <1Mohm.
Ground Fault	- Check the voltage of neutral and PE. - Check AC wiring. - Restart inverter, if error message persists, seek for help from us.
OCP	- Turn off the PV and grid, reconnect them. - Or seek for help from us if it does not go back to normal.
PLL Fault	- System will reconnect if the utility is back to normal. - Or seek for help from us if it does not go back to normal state.
PV OVP	- Check the panel's open-circuit voltage whether the value is similar or already >585Vdc. - Please seek help from us when voltage ≤585Vdc.
Relay Fail	- Disconnect PV (+), PV (-) with DC. - After the OLED switches off, reconnect and check again. - Please seek for help from us if it does not go back to normal state.
Sample Fault	- Disconnect PV (+), PV (-) with DC. - After the OLED switches off, reconnect and check again. - Please seek for help from us if it cannot go back to normal state.
Comm Lost	- Disconnect PV+, PV-, reconnect them. - Or seek for help from us if it does not go back to normal state.
MS Comm Lost	- Disconnect PV (+), PV (-) with DC. - After the OLED switches off, reconnect and check again. - Please seek for help from us if it cannot go back to normal state.
Over Temp	- Check if the environment temperature is over the limit. - Or seek for help from us.

7.2 Troubleshooting

a. Please check the fault message on the System Control Panel or the fault code on the inverter information panel. If a message is displayed, record it before doing anything further.

b. Attempt the solution indicated in table above.

c. If your inverter information panel is not displaying a fault light, check the following to make sure that the current state of the installation allows for proper operation of the unit:

   (1) Is the inverter located in a clean, dry, adequately ventilated place?

   (2) Have the DC input breakers opened?

   (3) Are the cables adequately sized?

   (4) Are the input and output connections and wiring in good condition?

   (5) Are the configurations settings correct for your particular installation?

   (6) Are the display panel and the communications cable properly connected and undamaged?

Note: Only qualified individuals may perform the above works.

Contact Customer Service for further assistance. Please be prepared to describe details of your system installation and provide the model and serial number of the unit.

7.3 Routine Maintenance

- Safety check

A safety check should be performed at least every 12 months by a qualified technician who has adequate training, knowledge and practical experience to perform these tests. The data should be recorded in an equipment log. If the device is not functioning properly or fails any of the tests, the device has to be repaired. For safety check details, refer to section 2 of this manual.

- Maintenance checking list

During the process of using the inverter, the responsible person shall examine and maintain the machine regularly. The required actions are as follows.

- Check that if the cooling fins at the rear of the inverters are collecting dust/dirt, and the machine should be cleaned when necessary. This work should be conducted periodically.
- Check that if the indicators of the inverter are in normal state, check if the display of the inverter is normal. These checks should be performed at least every 6 months.
- Check if the input and output wires are damaged or aged. This check should be performed at least every 6 months.
- Get the inverter panels cleaned and their security checked at least every 6 months.

Note: Only qualified individuals may perform the above works.

8. Decommissioning

8.1 Dismantling the Inverter

- Disconnect the inverter from DC Input and AC output. Wait for 5 minutes for the inverter to fully de-energize.
- Disconnect communication and optional connection wirings. Remove the inverter from the bracket.
- Remove the bracket if necessary.

8.2 Packaging

If possible, please pack the inverter with the original packaging. If it is no longer available, you can also use an equivalent box that meets the following requirements.

- Suitable for loads more than 30 kg.
- Contains a handle.
- Can be fully closed.

8.3 Storage and Transportation

Store the inverter in dry place where ambient temperatures are always between -40°C ... +70°C;

Take care of the inverter during the storage and transportation; keep less than 4 cartons in one stack.

When the inverter or other related components need to be disposed of, please ensure it is carried out according to local waste handling regulations. Please be sure to deliver any inverter that needs to be disposed from sites that are appropriate for the disposal in accordance with local regulations

The copyright of this manual belongs to Fox ESS CO., LTD. Any corporation or individual should not plagiarize, partially or fully copy (including software, etc.), and no reproduction or distribution of it in any form or by any means is permitted. All rights reserved.

Fox ESS CO., LTD.

Add: No.939, Jinhai Third Road, New Airport Industry Area, Longwan District, Wenzhou, Zhejiang, China

Tel: 0510- 68092998

Web: WWW.FOX-ESS.COM

V1.0.0

10-500-10342-00