L [mm]	Weight [g]
20	20
25	23,1
30	26,2
40	32,4
50	38,6

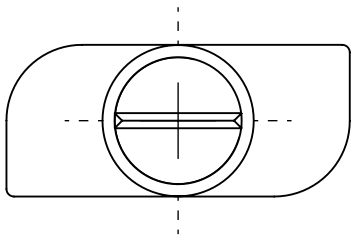

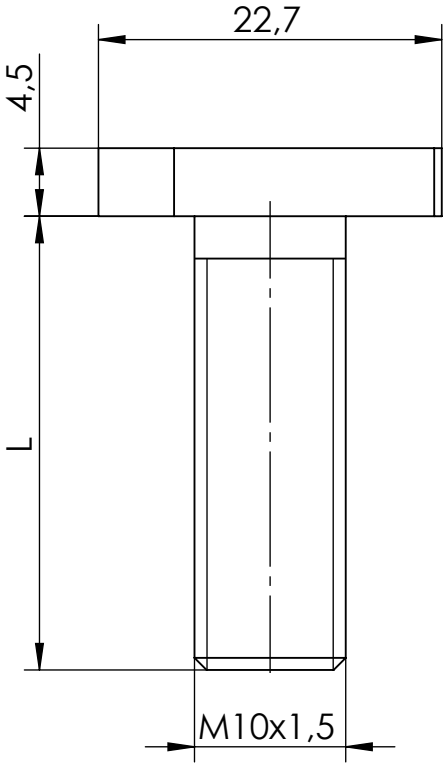

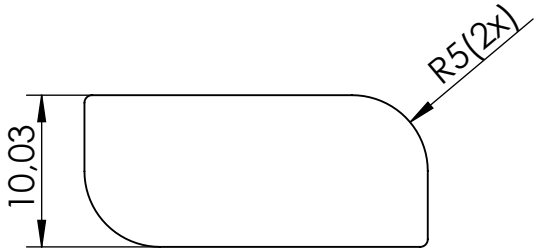

Isometric

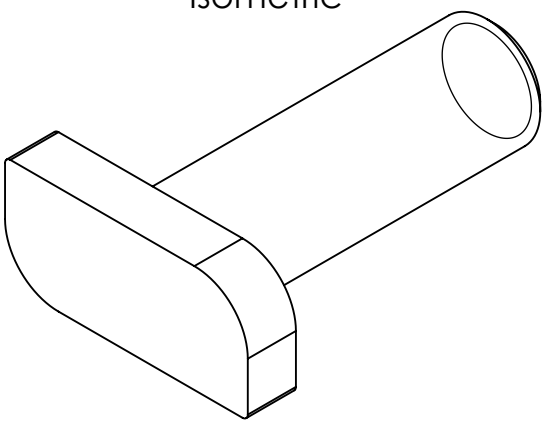

K2 Systems GmbH
Haldenstr. 1
71272 Renningen
Germany
+49 7159 42059-0

Designation:

Data sheet T-Bolt 28/15 M10

	Name	Date	Material:	Item no.:	
Designed	Winterhalter	27.07.2010	A2-70	see table	A4
Approved	S. Frey	14.04.2025	Surface: blank	Drawing no.: 05-001-04	All dimensions in mm
Last change	M. Schuler	14.04.2025	Weight: see table	Scale: 2:1	Sheet 1 of 1

This drawing is the sole property of K2 Systems GmbH. It is protected by copyright and may only be copied, reproduced or distributed to a third party with explicit permission!