ESDEC

INNOVATIVE **MOUNTING SYSTEMS**

MANUAL

CLICKFIT EVO
SLATE ROOF

CLICKFIT EVO

www.esdec.com

TABLE OF CONTENTS

Introduction **3**
About this document 3
Other relevant documents 3
Earthing and bonding 3
Symbols used in this manual 3

Warranty and liability **4**
Warranty 4
Liability 4

Product information **4**
Intended use 4
Improper use 4
Specifications 4

System and application **5**
Components **5**

Safety **6**
Personal protective equipment **6**
Safety warnings and regulations **6**

Installation **6**
Preparation **6**
Cutting mounting rails to required size **10**
Install the slate roof hooks **11**
Situation A: on two battens, using the middle hole 13
Situation B: on two battens, using the lower hole 14
Situation C: On one batten and a timber shim 14
Situation D: On Solid wood boards / concrete 15
Attaching the mounting rails **16**
Optional: Attaching the cable clips **18**
Mounting the first panel **19**
Mounting the following panels **22**
Mounting the last panel **22**
Mounting multiple rows **25**

Removal and recycling **25**
General 25

INTRODUCTION

ABOUT THIS DOCUMENT

In this manual you will find the installation instructions for the ClickFit EVO mounting system for solar panels on slate roofs.

The system is suitable for mounting solar panels in portrait and landscape orientation.

These instructions are addressed at qualified technical personnel.

You can download the latest version of this manual from www.esdec.com.

OTHER RELEVANT DOCUMENTS

When installing the ClickFit EVO mounting system, you will need the following documents:

- The project plan, which you can create in the calculator at www.esdec.com.
- The installation manuals for the solar panels, inverters and any other components.

During the installation of the mounting system, it is important to adhere to the installation manual and the accompanying standards to prevent accidents. Pay special attention to (local) standards, regulations and legislation (among others):

- Local Building Regulations (latest version)
- Health and Safety at Work etc Act 1974
- Health and Safety in Roof work - HSE
- Eurocodes 0 (EN 1990 - Structural Design)
- Eurocodes 1 (EN 1991 - (Influences on structures)
- HD-IEC 60364 series - Electrical installations for low voltage
- EN-IEC 62305-2 - Protection lightning - Risk Management
- MIS 3002 – The solar PV standard
- MCS012 - Product Certification Scheme Requirements: Pitched Roof Installation Kits

EARTHING AND BONDING

Our ClickFit EVO systems are VDE certified for corrosion and bonding. According to the electrical standard HD-IEC 60364 – chapter 712, functional bonding for inverter's isolation check is necessary.

In the Esdec ClickFit EVO Series functional bonding is achieved through the EVO universal module clamp for the module frames and EVO rails. The final functional bonding connection is made by proper mounting of a separate bonding cable onto the EVO rail and an adequate bonding connection with the inverter or earthing contact.

For detailed instructions on grounding and bonding, consult the electrical standard HD-IEC 60364 and any local regulations. Please, follow the instructions of the inverter's manual. This operation needs to be done by a certified electrician.

SYMBOLS USED IN THIS MANUAL

	Warning!	Failure to follow this instruction could result in serious injury or major damage to the product.
	Caution!	Failure to follow this instruction could result in personal injury or damage to the product.
	Note	Emphasises an instruction.

WARRANTY AND LIABILITY

WARRANTY

Esdec extends a 20 year product warranty. The warranty is subject to the warranty terms and general terms & conditions of Esdec BV. These can be found on the www.esdec.com website.

LIABILITY

The manufacturer accepts no liability for damage or injury caused by the failure to comply (strictly) with the safety guidelines and instructions in this manual, or by negligence during installation of the product and the accessories listed in this document.

Esdec BV reserves the right to change this document without notice.

PRODUCT INFORMATION

INTENDED USE

The ClickFit EVO mounting system is designed for mounting solar panels on slate roofs. With this mounting system, solar panels can be positioned on the roof either with the short side at the bottom (portrait) or with the long side at the bottom (landscape).

IMPROPER USE

The mounting system is not suitable for use on types of roof other than the one specified.

SPECIFICATIONS

Orientation of solar panels	Portrait and landscape
Frame height of solar panel [1]	30 - 50mm
Maximum area of solar panels	2.6m^2
Maximum field size [2]	For horizontal and vertical rails: 15 m per segment Longer segments require a dilatation gap of 125 mm.
Roof material	Slates
Roof structure	Battens
	Solid wood boards
	Concrete
Roof pitch	5 - 75°
Maximum roof height	ℹ Subject to Eurocode guidelines and national additions. Use the calculator to calculate the possibilities of your project.
Edge zone	30cm distance to the ridge, 30cm to the side of the roof and 30 cm to the gutter.

[1] Ensure that the module frame is compatible with the ClickFit EVO Module Clamp universal before installation.

[2] Always consider the right measures related to fire spread and compartmentalization. This might influence the modules segment size.

! Enter the data in the calculator, so you are sure of choosing the right system for the terrain category, snow loads and wind zone that applies to your project.

ℹ Depending on the roof and the result obtained from the calculator, you can lay several segments with solar panels next to each other. Always leave a minimum of 12 mm of space between segments to allow for expansion of the roof.

ℹ If your project has different specifications than these, please contact Esdec.

1 COMPONENTS

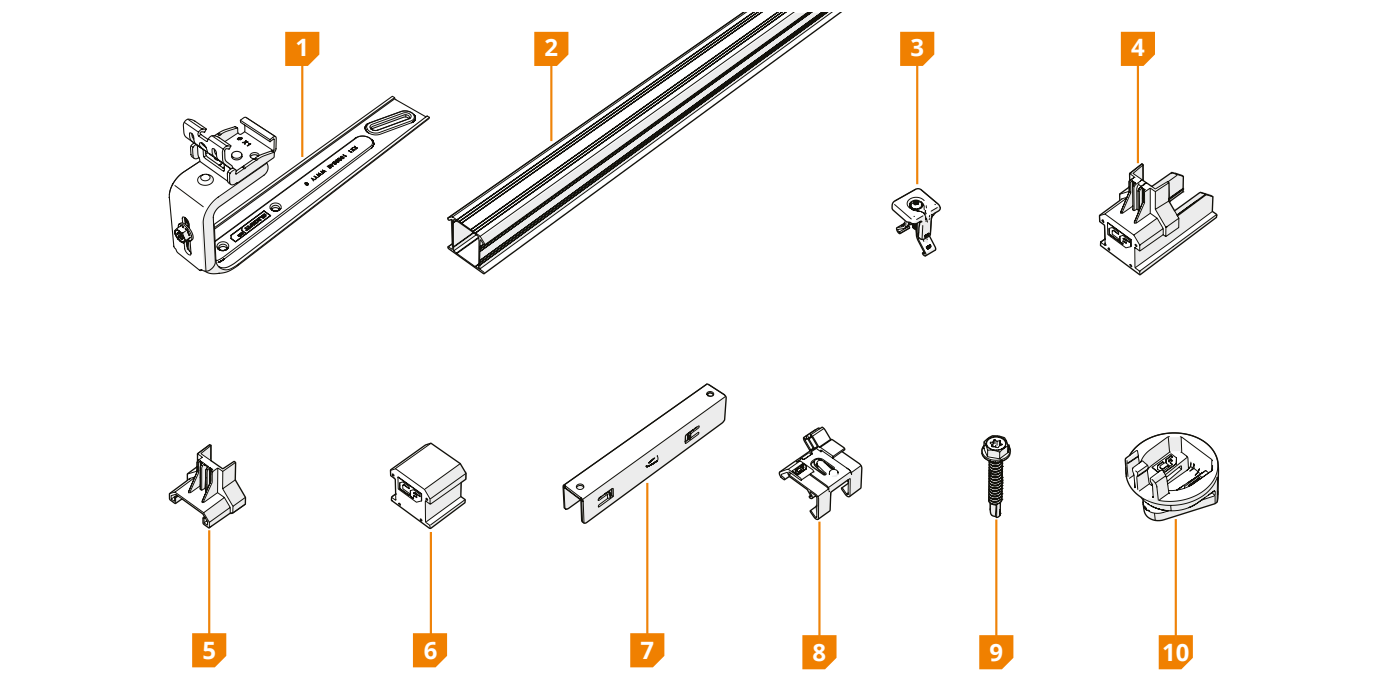

COMPONENT	ARTICLE NUMBER
1 ClickFit EVO Slate roof hook	1008042
2 ClickFit EVO Mounting Rail	10081_ _
3 ClickFit EVO Module Clamp universal	1008020(-B)
4 ClickFit EVO Mounting Rail End Cap	1008060(-B)
5 ClickFit EVO End Clamp Support	1008065(-B)
6 ClickFit EVO End Cap without end clamp support	1008066(-B)

ACCESSORY	ARTICLE NUMBER
7 ClickFit EVO Mounting Rail Coupler	1008061
8 ClickFit EVO Cable Clip Optimiser Ready	1008062
9 ClickFit EVO Self-drilling screw 6,3x42mm SW10/T30	1003016
10 ClickFit EVO mounting set	1008064

Check that the correct components are present in the required numbers according to the project plan generated by the calculator.

SAFETY

1 PERSONAL PROTECTIVE EQUIPMENT

	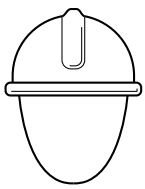				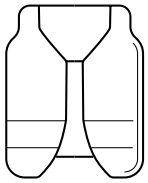	
Hearing protection	Safety helmet	Safety glasses	Face masks	Safety gloves	Safety clothing	Safety shoes

2 SAFETY WARNINGS AND REGULATIONS

Warning!

- Installation work should always be carried out by at least two skilled people.
- Do not use components from other mounting systems.
- Do not leave out parts.
- Always work according to the current regulations for working on roofs.
- Do not perform the installation in strong winds, or when the roof is slippery or wet.
- Always work on the roof with fall protection and, if necessary, with safety nets and edge protection.
- Never stand on or in the gutter.
- Always use a lifting aid or hoisting device when moving heavy equipment.
- Always place ladders on a strong, stable surface.

Caution!

- Walk as little as possible on the roof. Use an aerial platform, ladder or other solution.
- Never walk on the system or on the solar panels.

INSTALLATION

1 PREPARATION

1 INSPECT THE ROOF.	
☐	The roof is in good condition.
☐	The roof construction has sufficient bearing capacity to support the installation, taking into account wind and snow loads.

- To ensure the safe and efficient installation of PV systems on slate roofs, the work should be carried out by professional slate roofers. Before undertaking any work on the roof, a thorough inspection must be conducted to assess the roof condition.

2 CHECK THE PROJECT PLAN AND COMPONENTS.

☐	Check the project plan. Is there no project plan? Then create one in the online calculator before starting installation.
☐	Check that all components are present (page 5).
☐	Determine the position of the slate roof hooks. Use the battens or trusses if present.

3 MAKE SURE ALL THE REQUIRED TOOLS ARE AT HAND.

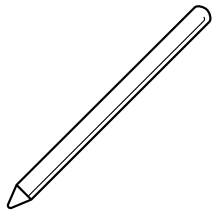	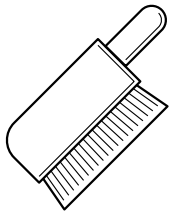	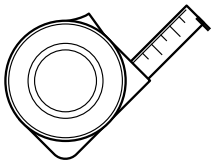	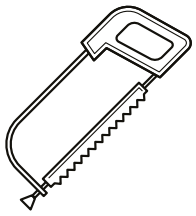	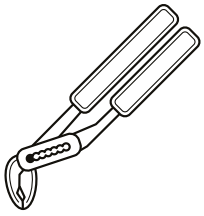
Marker or chalk	Brush	Tape measure	Hacksaw	Pliers
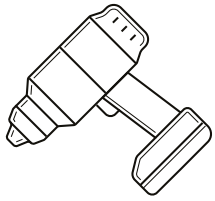	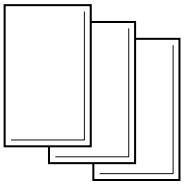	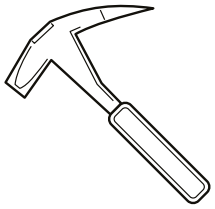	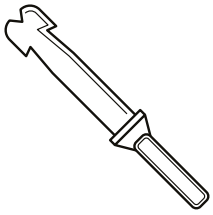	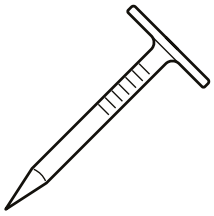
Cordless screwdriver	Spare slate tiles	Slate roofing hammer	Roofing nail setter	Slate roofing nails
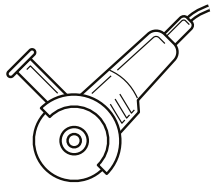		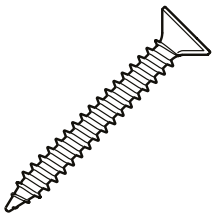		
Angle grinder	Plugs [1]	Ø 6 mm countersunk head screws [2]	Waterproofing material	Timber shims

[1] only for installation on concrete constructions.

[2] The selection of screws should be based on the specific underroof construction. To ensure proper installation and compatibility with the slate roof hooks, we recommend using screws with the following specifications:

Diameter	Ø 6 mm
Effective length	≥ 36 mm
Head type	Countersunk Torx T30 [3]
Material	ZnNi coated

[3] Countersunk screws are recommended to avoid any interference with the proper installation of the upper slate tile.

4 CLEAN AND TIDY THE ROOF.

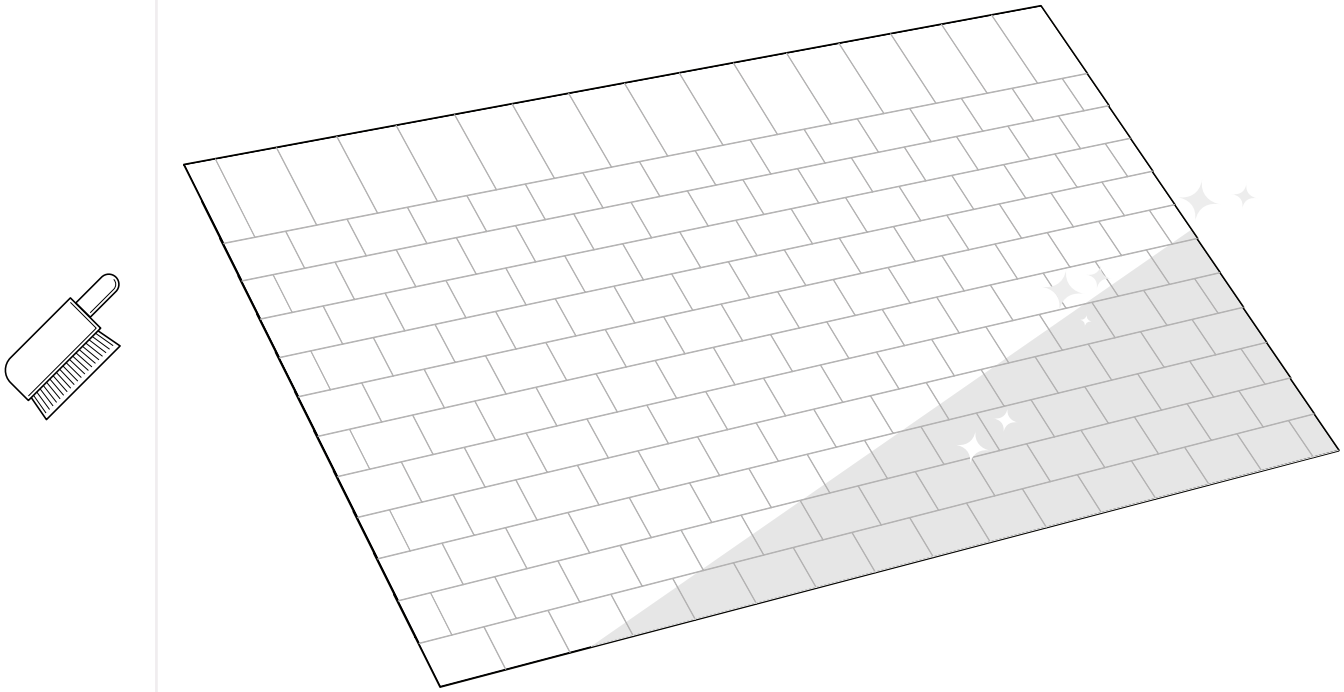

5 DETERMINE THE POSITION OF THE SOLAR PANELS ON THE ROOF

- Consider the (local) fire regulations for photovoltaic installations. To mitigate the risk of fire spread, the fire compartments of the object must be respected. The PV system should not be placed over fire partition walls and a minimum distance of 30 cm must be kept. Likewise, it is wise to keep space in relation to skylights, lighting globes, corners and potential fire hazards.
- Take into account sunlight and shade over the whole year. If necessary, use a power optimizer or micro inverter to get the most out of your installation.
- The distance from the edge of solar panels to both the ridge and the gutter must be at least 30cm.
- The distance from the solar panels to the side of the roof must be at least 30cm.

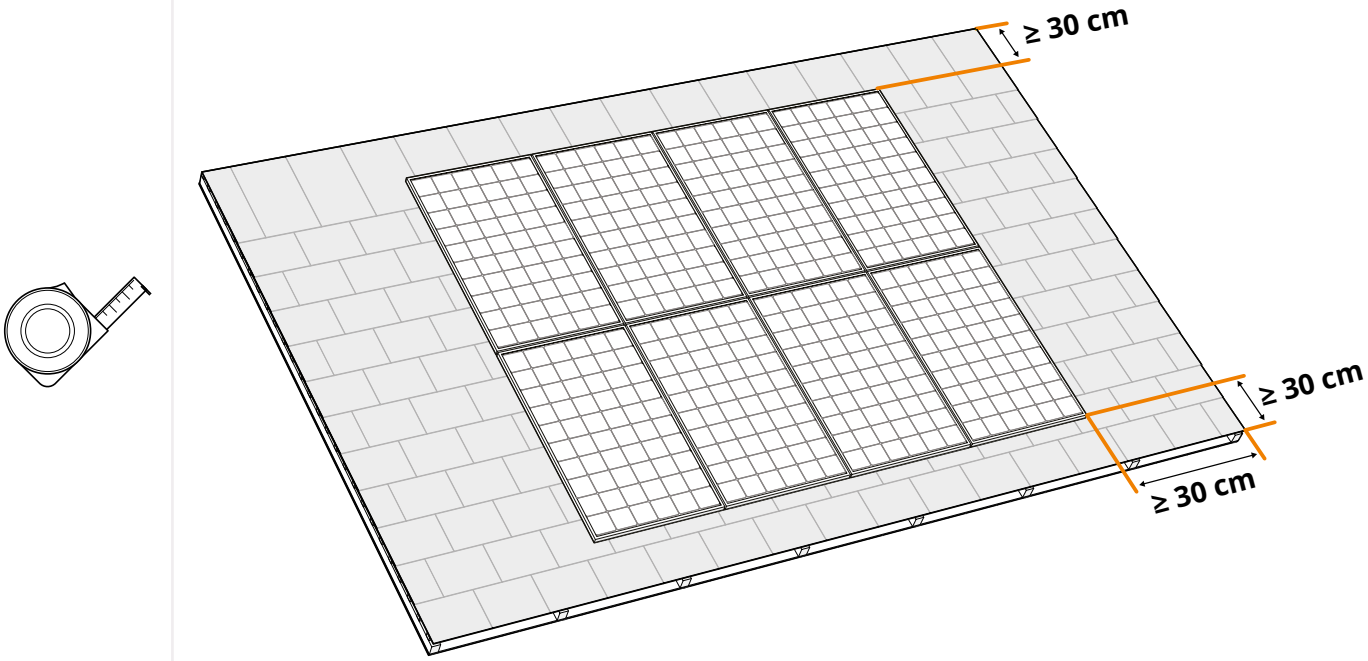

6 DRAW THE LINES AND END POINTS FOR THE MOUNTING RAILS

a. For mounting in portrait orientation, mark the lines where the mounting rails will be placed: at ¼ from the panel top edge and panel bottom edge.

b. For mounting in landscape orientation, mark the lines where the mounting rails will be placed: at ¼ of the panel side edges.

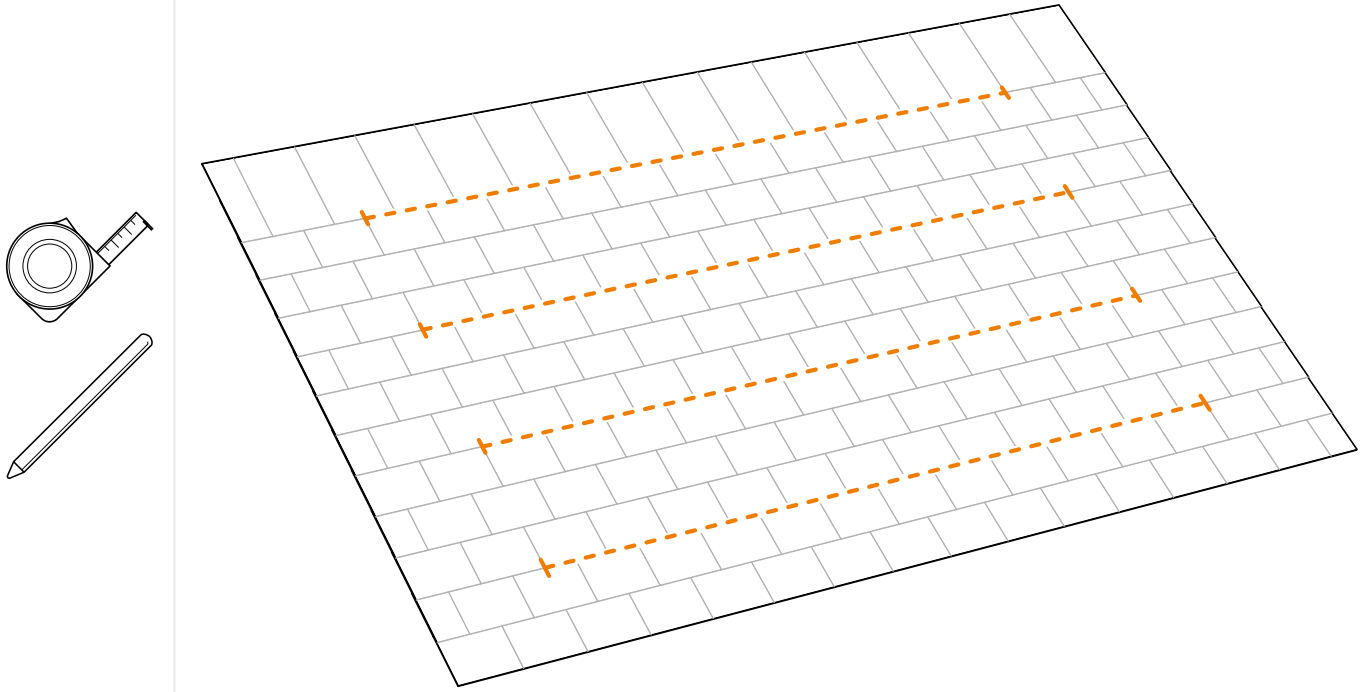

7 MARK THE POSITION OF THE SLATE ROOF HOOKS

Consult the project plan to determine the position of the slate roof hooks for your project.

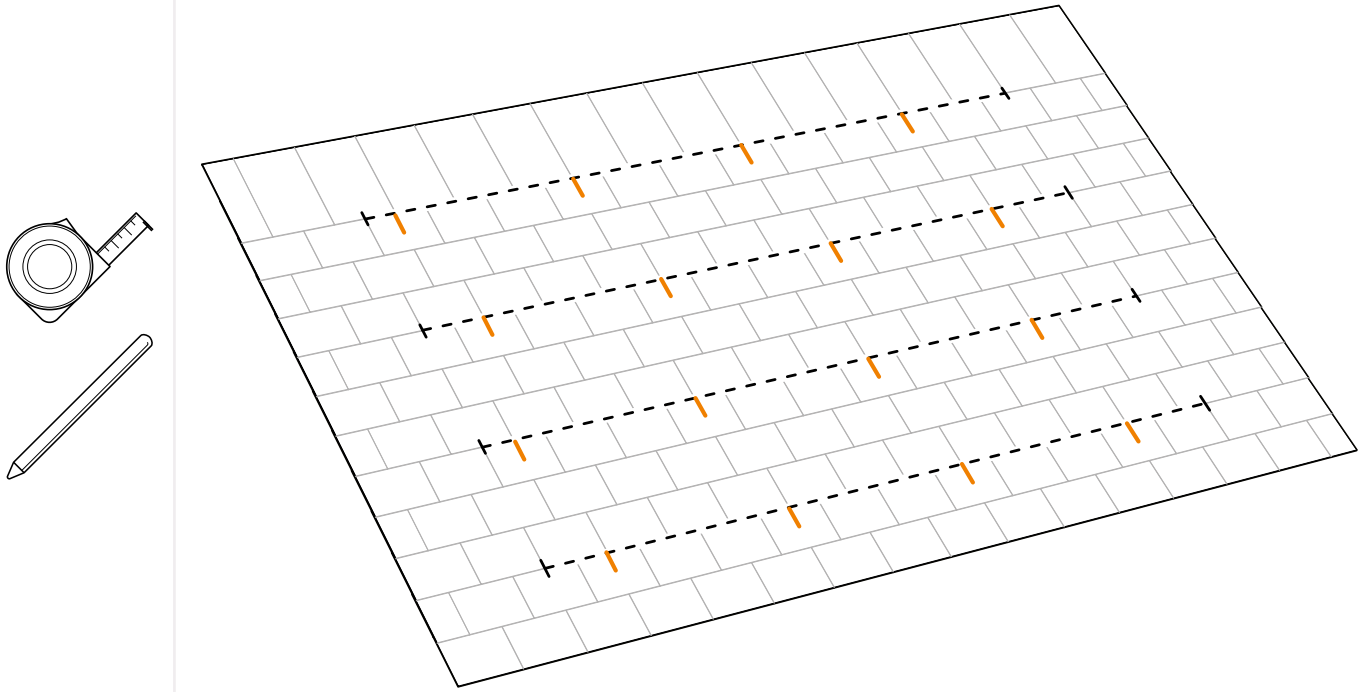

2 CUTTING MOUNTING RAILS TO REQUIRED SIZE

1 DETERMINE THE LENGTH OF THE MOUNTING RAILS BASED ON THE SOLAR PANELS

- If the overhang is smaller than 250 mm, keep a minimum of 20 mm to a maximum of 35 mm rail length overhang for mounting the end cap (art. no.1008060(-B)).
- Measure the solar panels and allow an additional 12 mm between each solar panel for the universal module clamp. Allow an additional 30mm on each side for mounting the end clamp and end cap.
- Calculate the minimum length of the mounting rails: (panel size + 12 mm) x number of panels - 12 mm + (2x 30 mm)

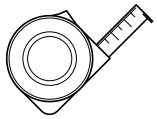

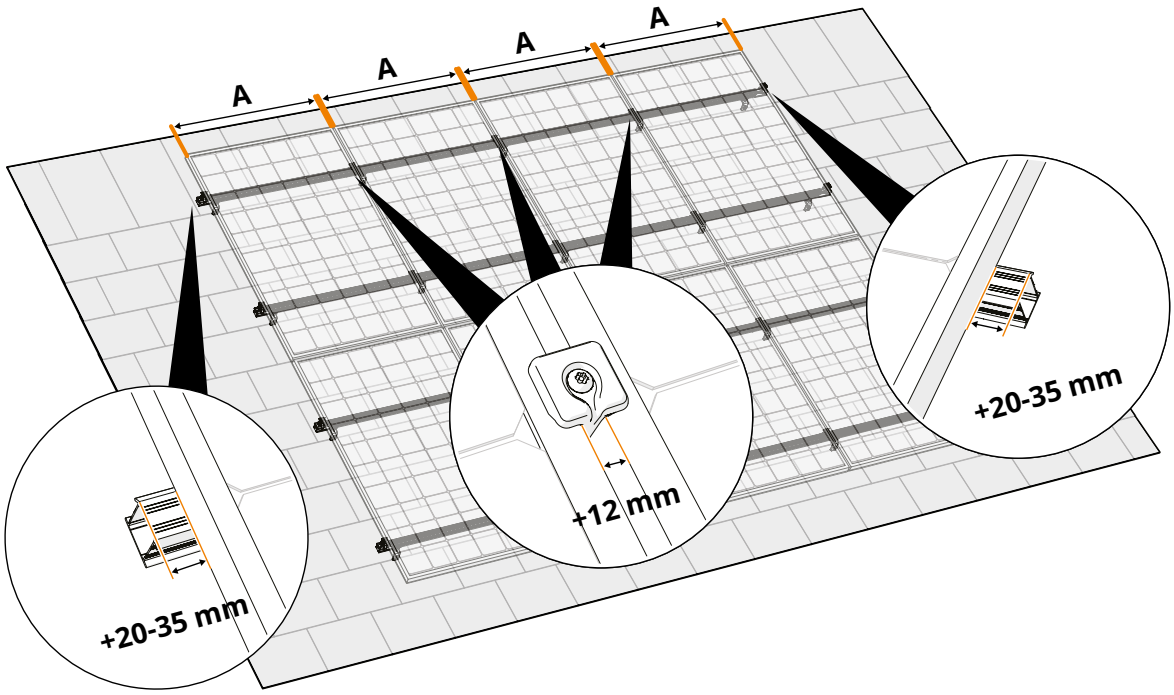

2 OPTIONAL: USE COUPLERS TO CONNECT THE MOUNTING RAILS

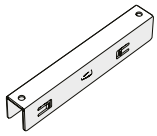

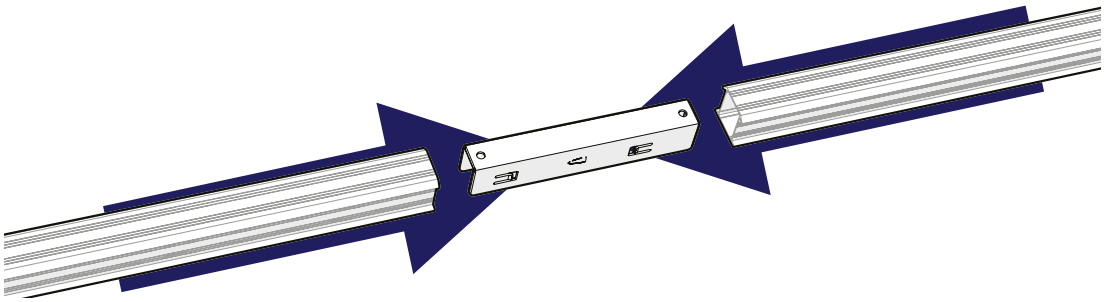

3 OPTIONAL: EXTEND THE MOUNTING RAIL TO THE NEXT SLATE ROOF HOOK

If the outer panel edge extends more than 250mm beyond the last roof hook, follow these steps:

1. Extend the mounting rail by 50 mm beyond the next roof hook (add an extra roof hook if needed).
2. Attach the mounting rail securely at this extended position.
3. The additional 50 mm extension allows for proper fitting of an end cap (art. no. 1008066(-B)) to the mounting rails.
4. When using the end clamp, ensure the use of the end clamp support (article no. 1008065(-B)).

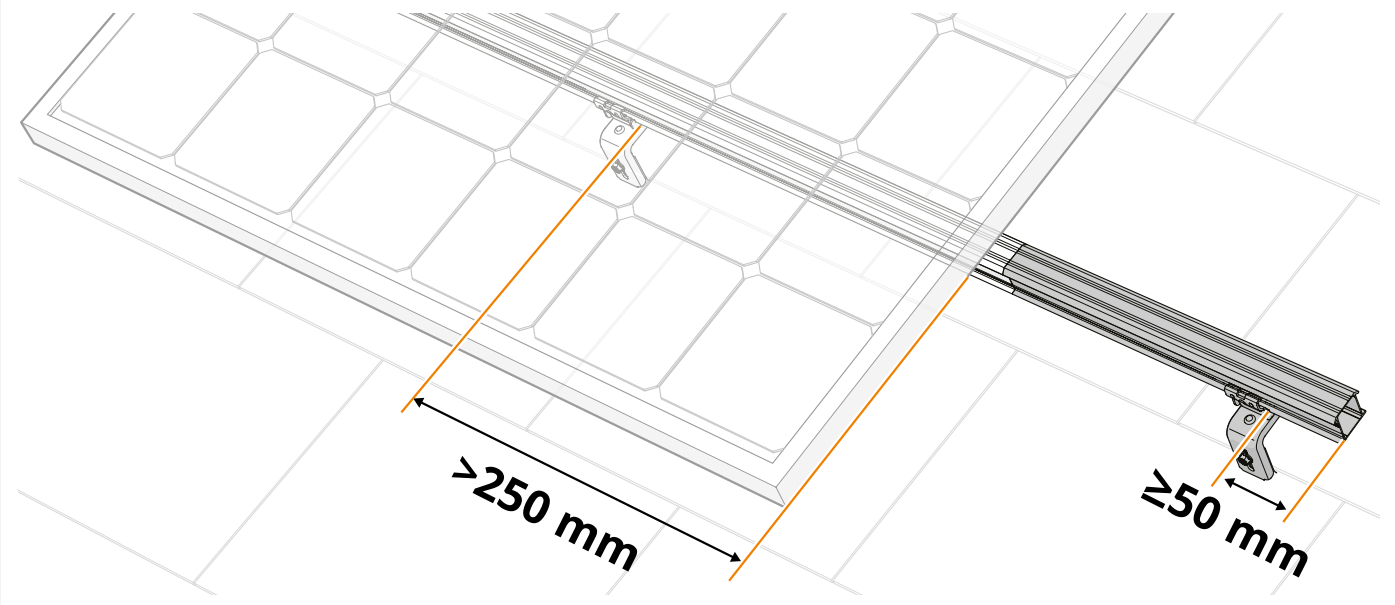

3 INSTALL THE SLATE ROOF HOOKS

1 IDENTIFY THE SLATE THAT NEEDS TO BE CUT FOR THE SLATE ROOF HOOK.

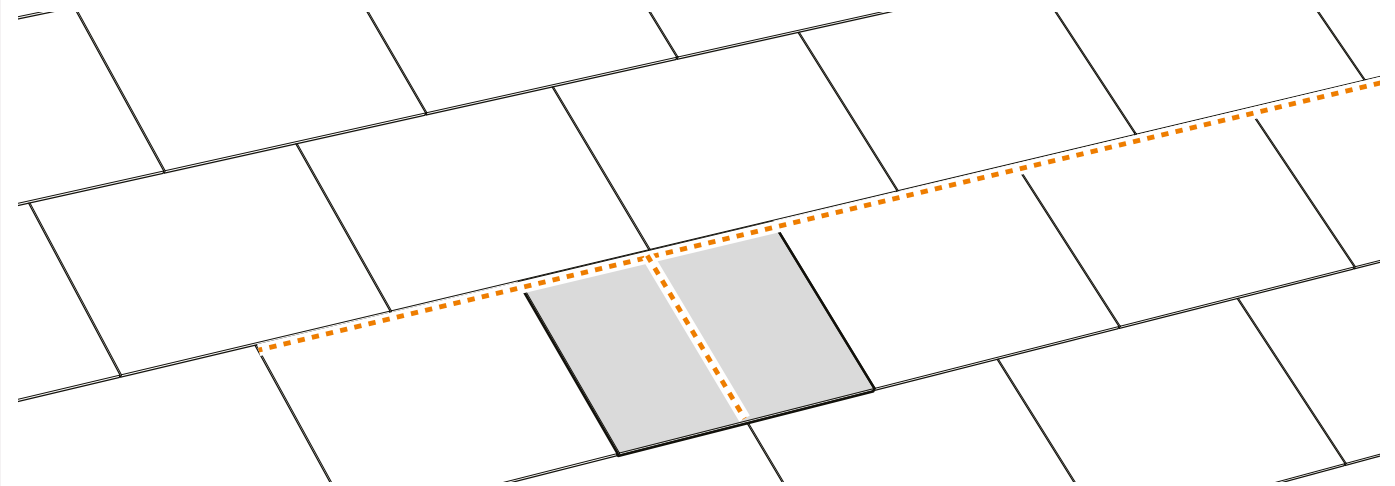

2 REMOVE ANY OVERLAPPING SLATE TILES.

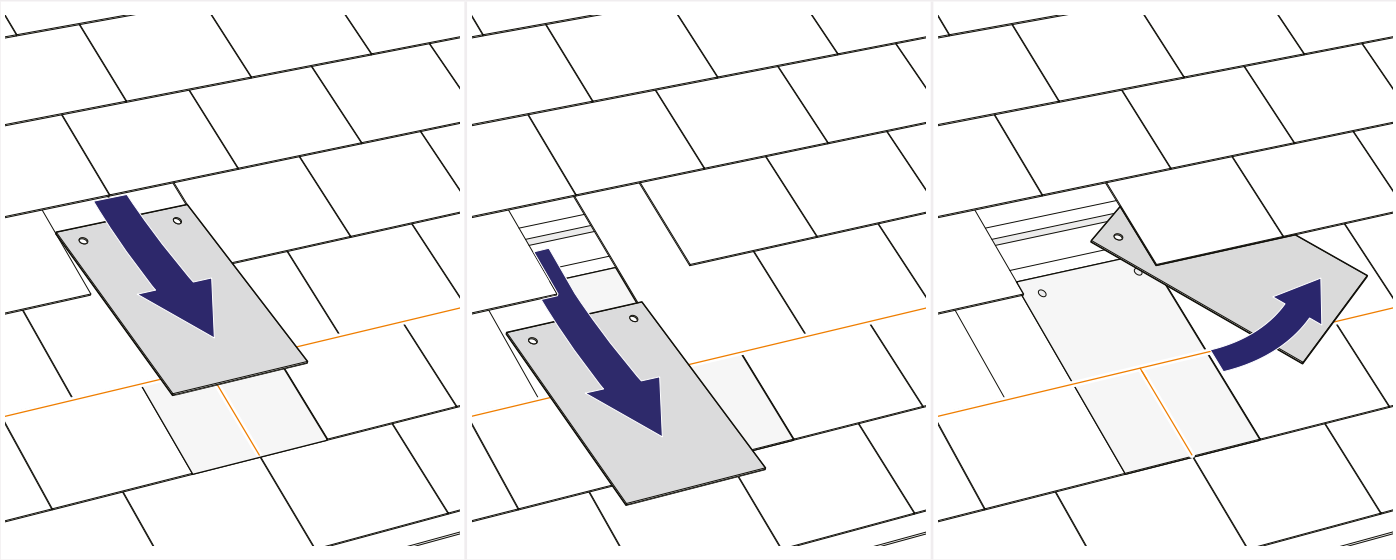

3 PLACE THE ROOF HOOK ON THE MARKED LOCATION AND MARK THE HOLE TO BE CUT.

Position the slate roof hook so it does not interfere with the overlapping slates.

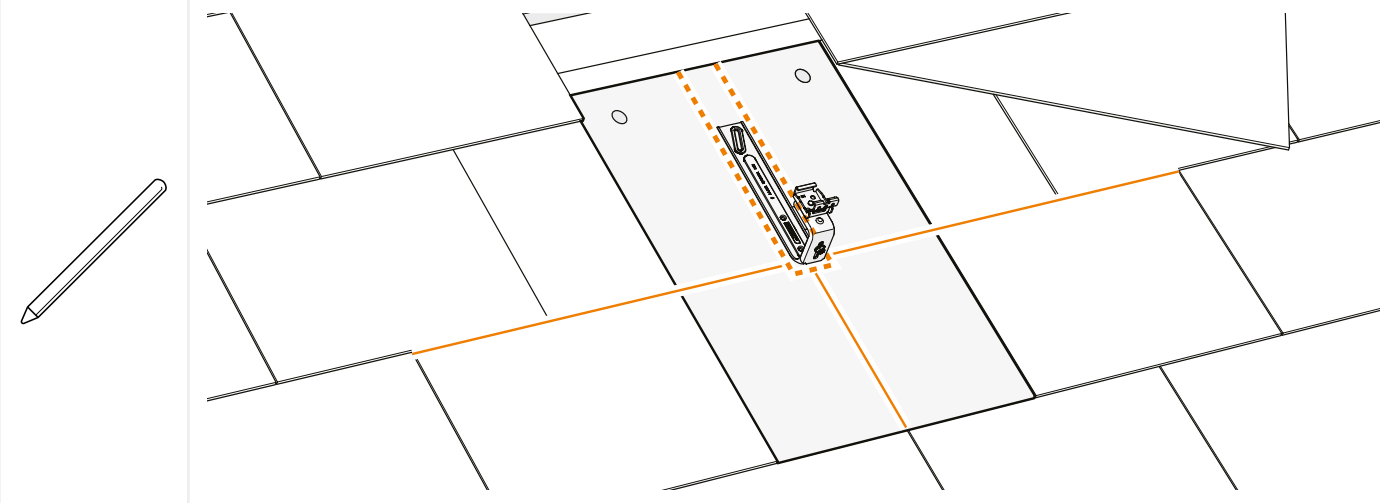

4 MAKE A CUT-OUT.

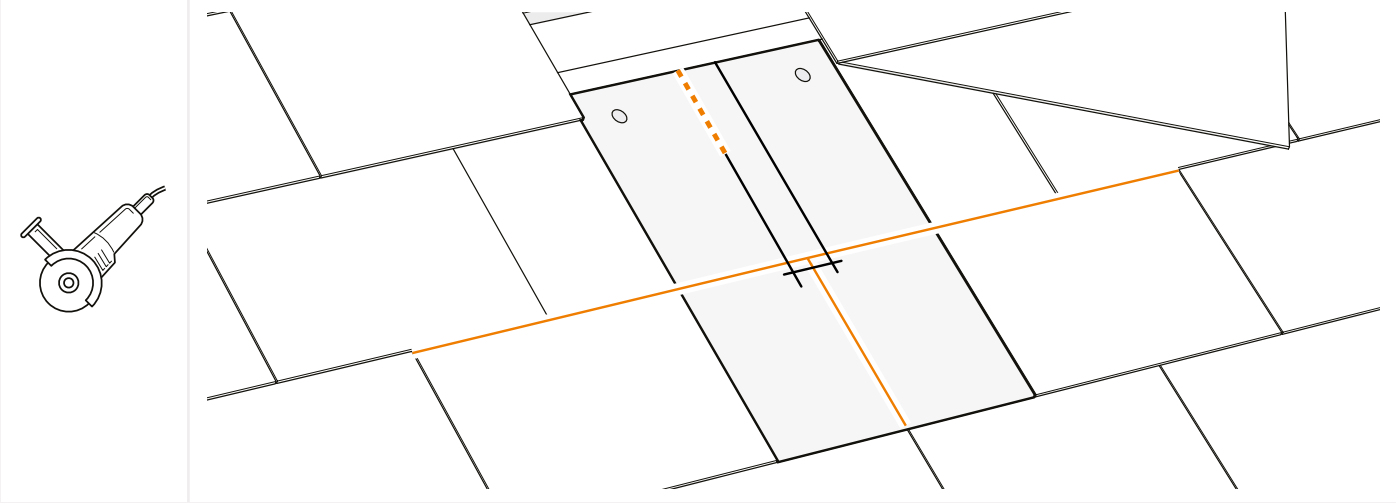

5 PLACE THE ROOF HOOK IN THE CUT-OUT AND CHECK WHAT SITUATION IS APPLICCABLE FOR YOUR CONSTRUCTION.

Prior to installing the hooks, carefully consider the waterproofing method to be utilized. This may involve incorporating a lead sheet or a similar waterproofing material.

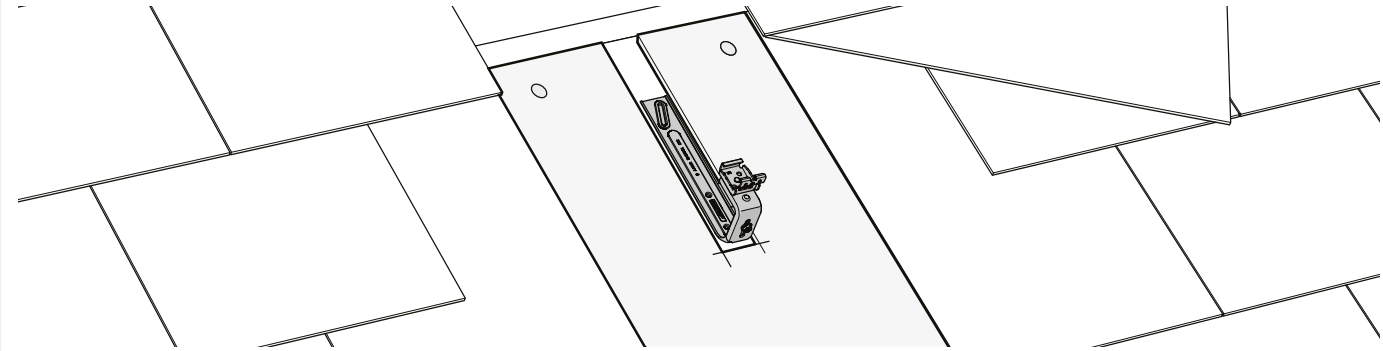

SITUATION A	SITUATION B	SITUATION C	SITUATION D
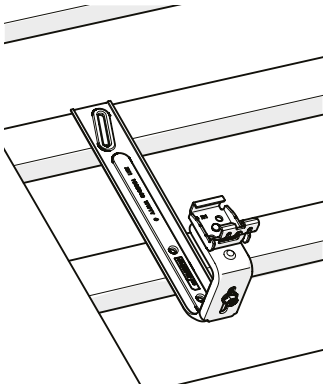	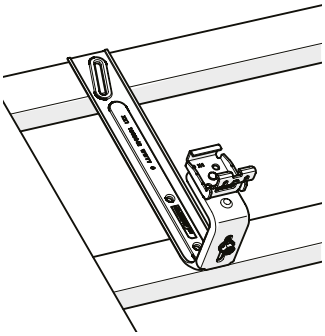	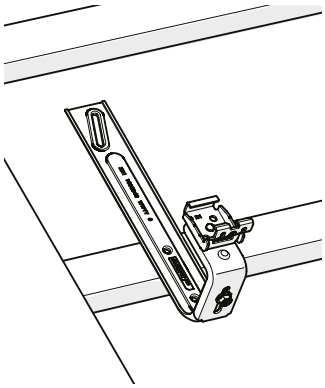	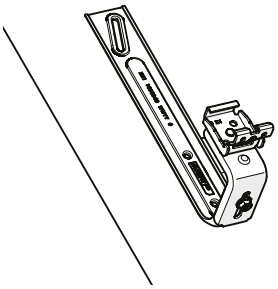

SITUATION A: ON TWO BATTENS, USING THE MIDDLE HOLE

1 POSITION THE SLATE ROOF HOOK SO IT DOES NOT INTERFERE WITH THE OVERLAPPING SLATES.
2 MOUNT THE SLATE ROOF HOOK TO THE BATTENS USING TWO Ø6 MM COUNTERSUNK HEAD SCREWS THROUGH THE SLOTTED AND CENTRE HOLE.

Make sure to position the upper screw as close to the middle of the batten as possible.

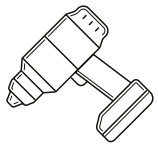

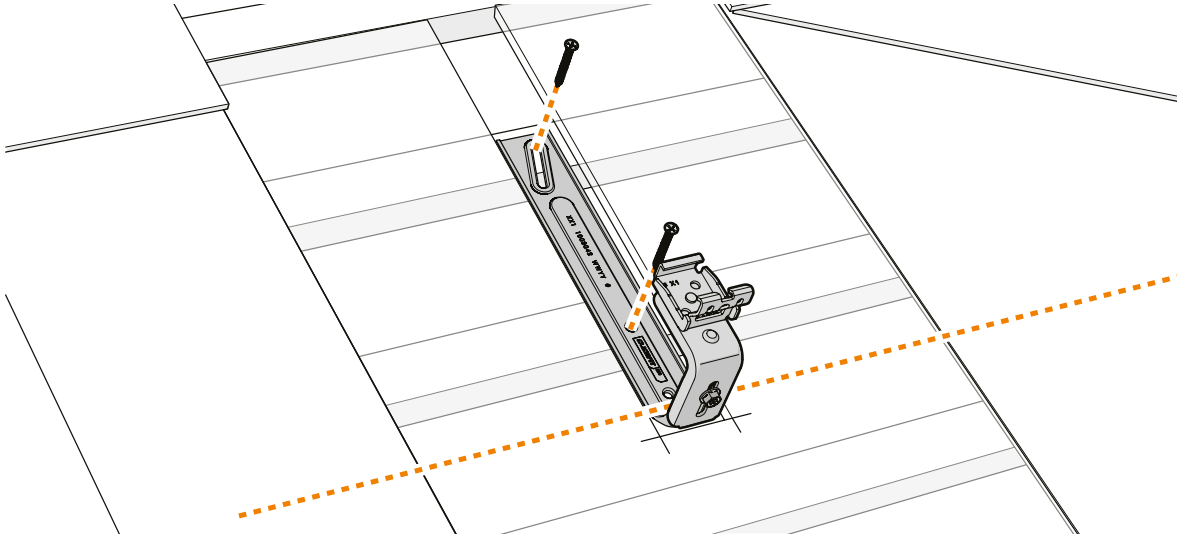

Continue to step 3.6.

SITUATION B: ON TWO BATTENS, USING THE LOWER HOLE

1 LOOSEN THE ALIGNMENT BRACKET SCREW USING A TORX T30 DRILL BIT OR AN H10 WRENCH.
2 ROTATE THE ALIGNMENT BRACKET SIDEWAYS TO ALLOW ACCES TO THE LOWER HOLE.
3 POSITION THE SLATE ROOF HOOK SO IT DOES NOT INTERFERE WITH THE OVERLAPPING SLATES.
4 MOUNT THE SLATE ROOF HOOK TO THE BATTENS USING TWO Ø6 MM COUNTERSUNK HEAD SCREWS THROUGH THE SLOTTED AND BOTTOM HOLE.
5 ROTATE AND SECURE THE ALIGNMENT BRACKET BACK UPRIGHT ON THE SLATE ROOF HOOK. APPLY A TORQUE OF 9 NM.

In this situation, the alignment bracket of the slate roof hook must be rotated aside for mounting.

Make sure to position the upper screw as close to the middle of the batten as possible.

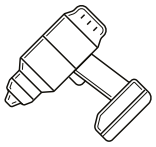

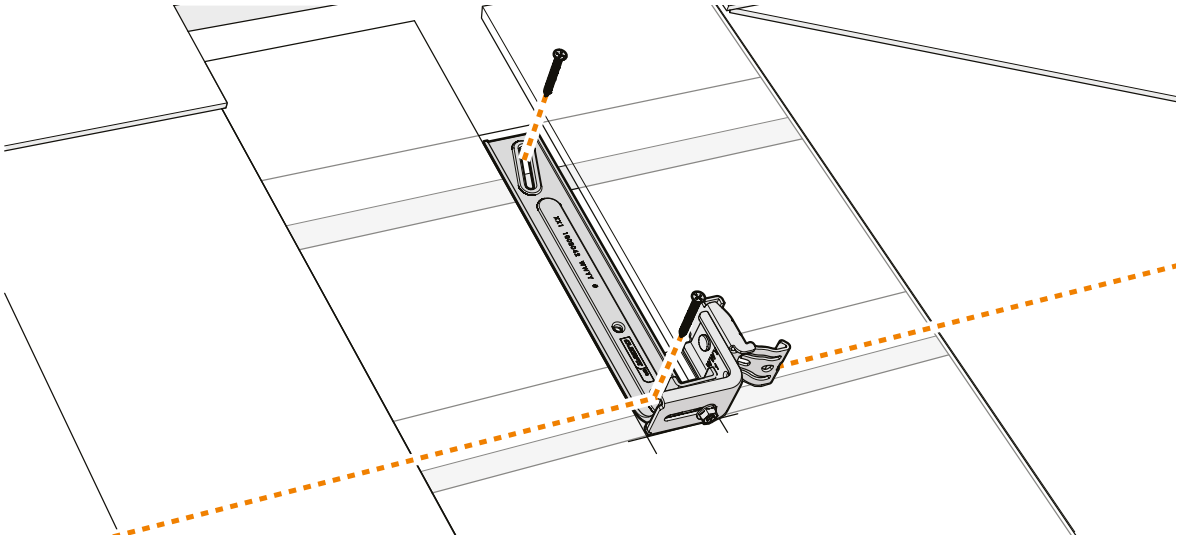

Continue to step 3.6.

SITUATION C: ON ONE BATTEN AND A TIMBER SHIM

1 POSITION THE SLATE ROOF HOOK SO IT DOES NOT INTERFERE WITH THE OVERLAPPING SLATES.
2 PLACE A SHIM UNDERNEATH THE SLOTTED HOLE OF THE SLATE ROOF HOOK (NOT INCLUDED).
3 MOUNT THE SLATE ROOF HOOK TO THE BATTEN AND SHIM USING TWO Ø6 MM COUNTERSUNK HEAD SCREWS THROUGH THE SLOTTED AND CENTRE HOLE.

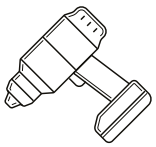

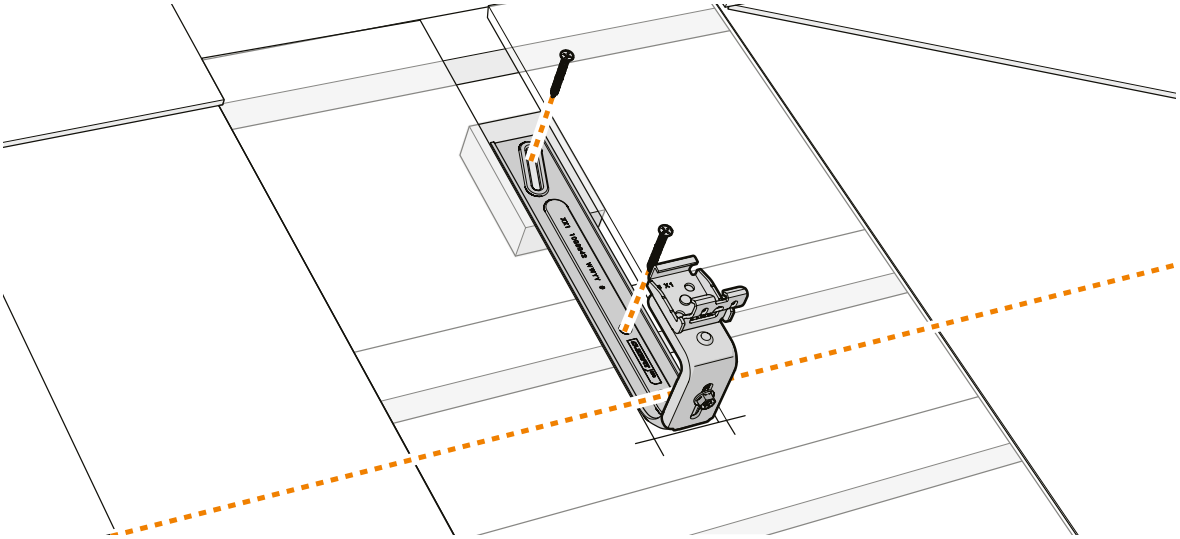

Continue to step 3.6.

SITUATION D: ON SOLID WOOD BOARDS / CONCRETE

1 FOR CONCRETE SUBSTRUCTURE: PREDRILL THE HOLES IN THE ROOF AND INSERT THE APPROPRIATE PLUGS (NOT INCLUDED).

2 FOR SOLID WOOD BOARDS: MAKE SURE THE SCREWS ARE NOT POSITIONED ALONG THE SAME WOOD GRAIN TO PREVENT THE WOOD FROM SPLITTING.
MOUNT THE SLATE ROOF HOOK TO THE CONSTRUCTION USING TWO Ø6 MM COUNTERSUNK HEAD SCREWS THROUGH THE SLOTTED AND CENTRE HOLE.

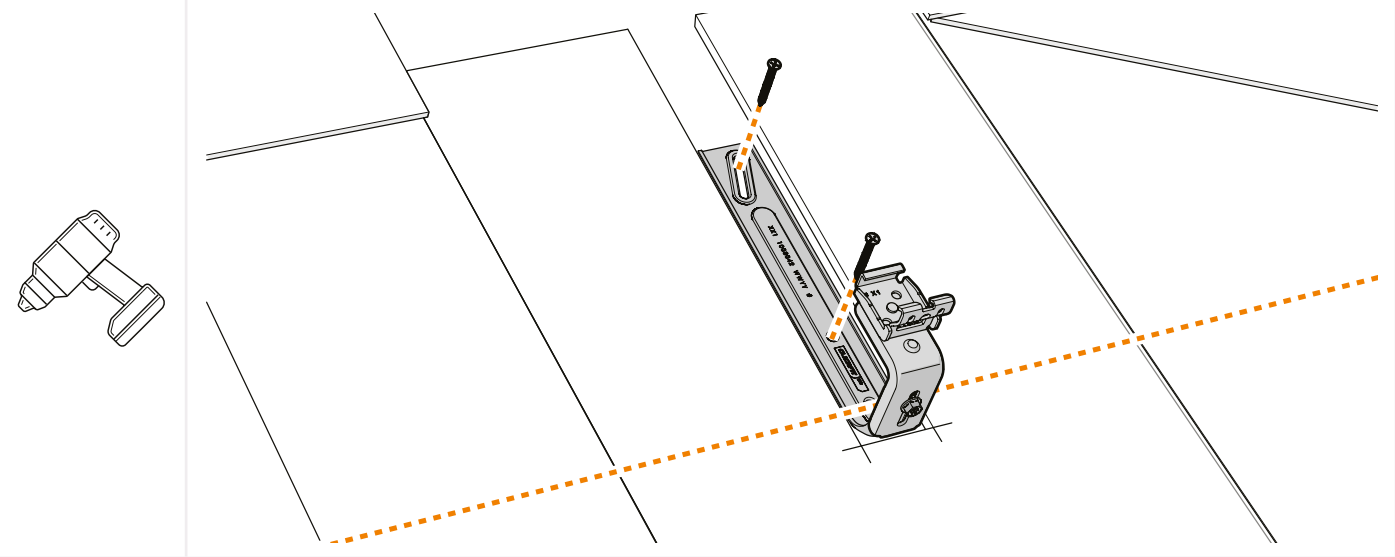

Continue to step 3.6.

6 REPLACE THE OVERLAPPING SLATE TILES.

Before replacing the overlapping slate tiles, carefully consider the waterproofing method to be employed. This may involve using a lead sheet or a similar waterproofing material.

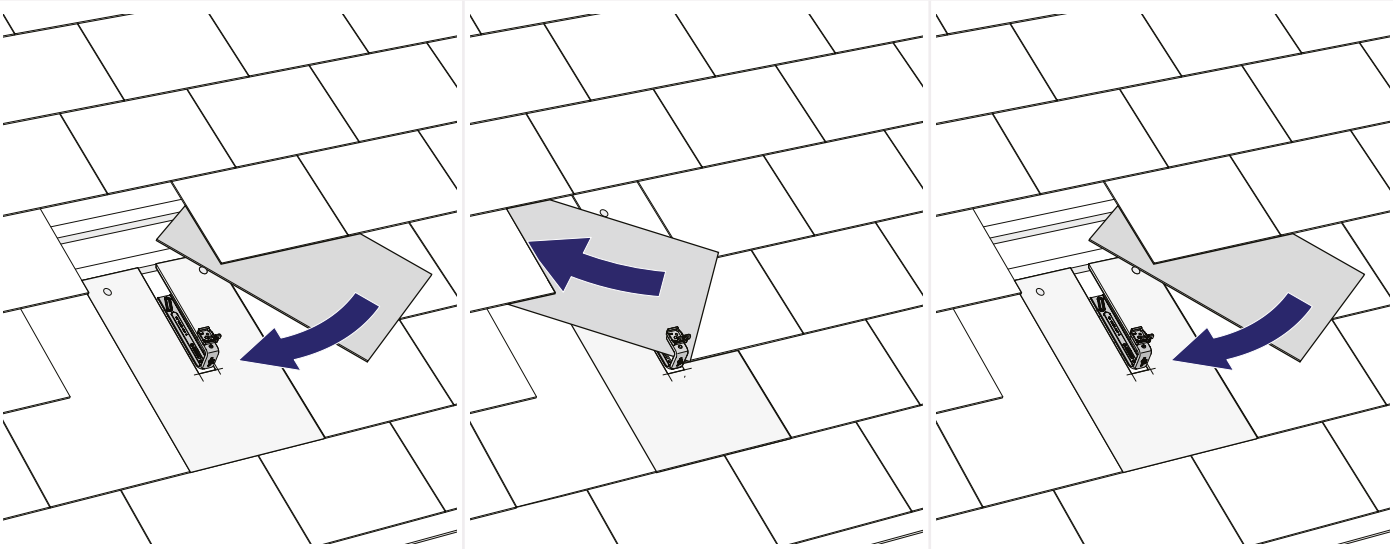

Repeat the steps in this chapter for all slate roof hooks.

4 ATTACHING THE MOUNTING RAILS

1 ROTATE THE CLICK CONNECTIONS INTO THE CORRECT ORIENTATION.

For horizontal rail orientation, make sure that the cable tray of the click connections is always pointing downwards.

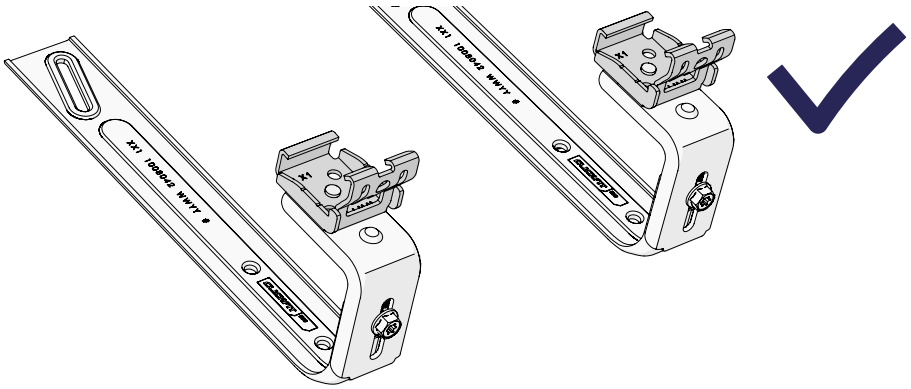

For vertical rail orientation, ensure that the click connections are all pointing in the same direction.

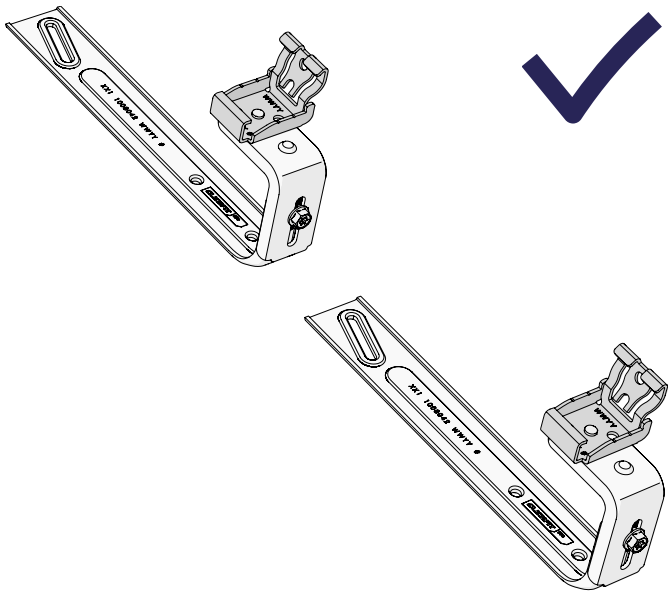

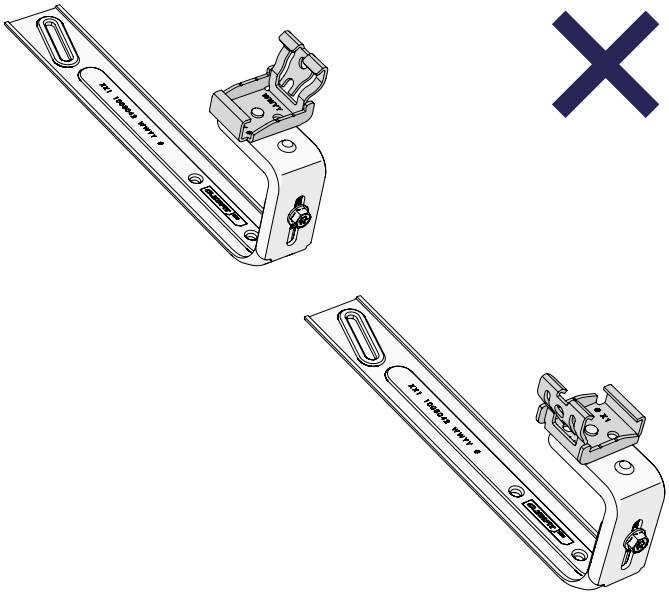

2 PLACE THE MOUNTING RAIL IN THE CLICK CONNECTION AND TWIST UNTIL IT CLICKS INTO PLACE.
3 MAKE SURE THAT THE MOUNTING RAILS ARE STRAIGHT AND PARALLEL TO EACH OTHER, CONSIDERING THE ALIGNMENT OF THE SOLAR PANELS.

Are the click connections not properly aligned in relation to each other? Loosen the screws of the misaligned brackets and click the mounting rail into the click connections. The rigidity of the rail ensures that the brackets and click connections set themselves into the correct position. Then retighten the screws. Apply a Torque of at least 9 Nm.

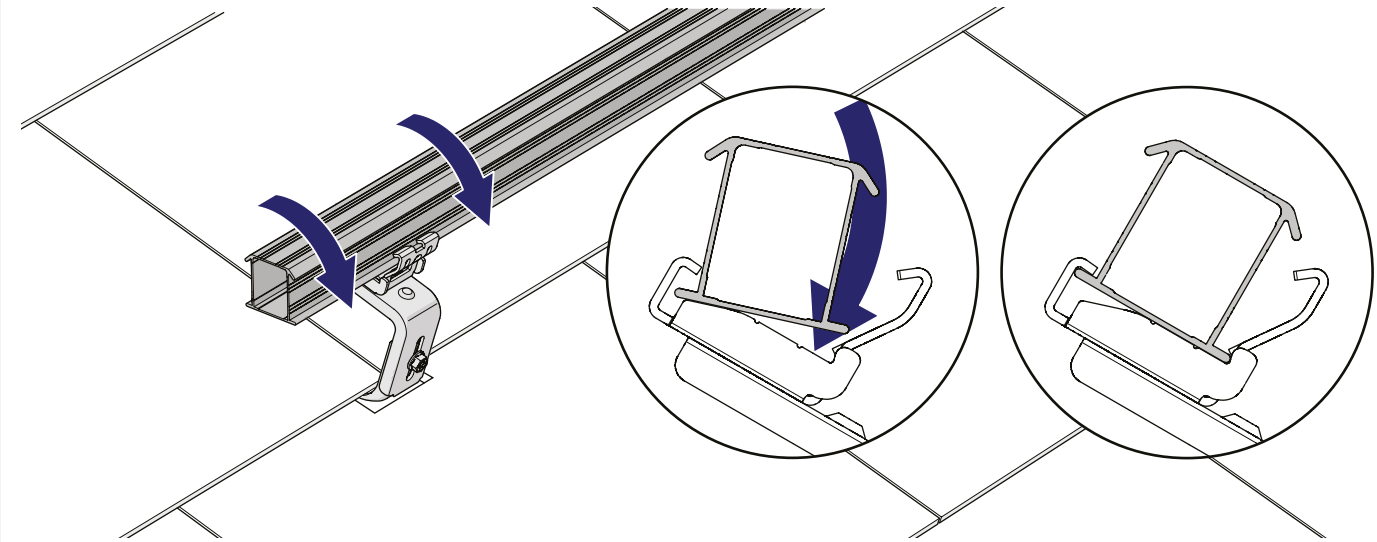

4 FOR VERTICAL MOUNTING: SECURE THE MOUNTING RAILS TO THE CLICK CONNECTIONS

First secure the bottom click connection with a self-drilling screw. Skip two click connections and then screw down the fourth click connection. Repeat until the top click connection.

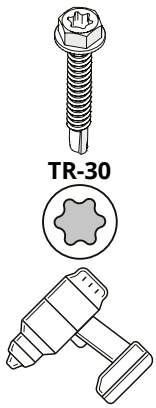

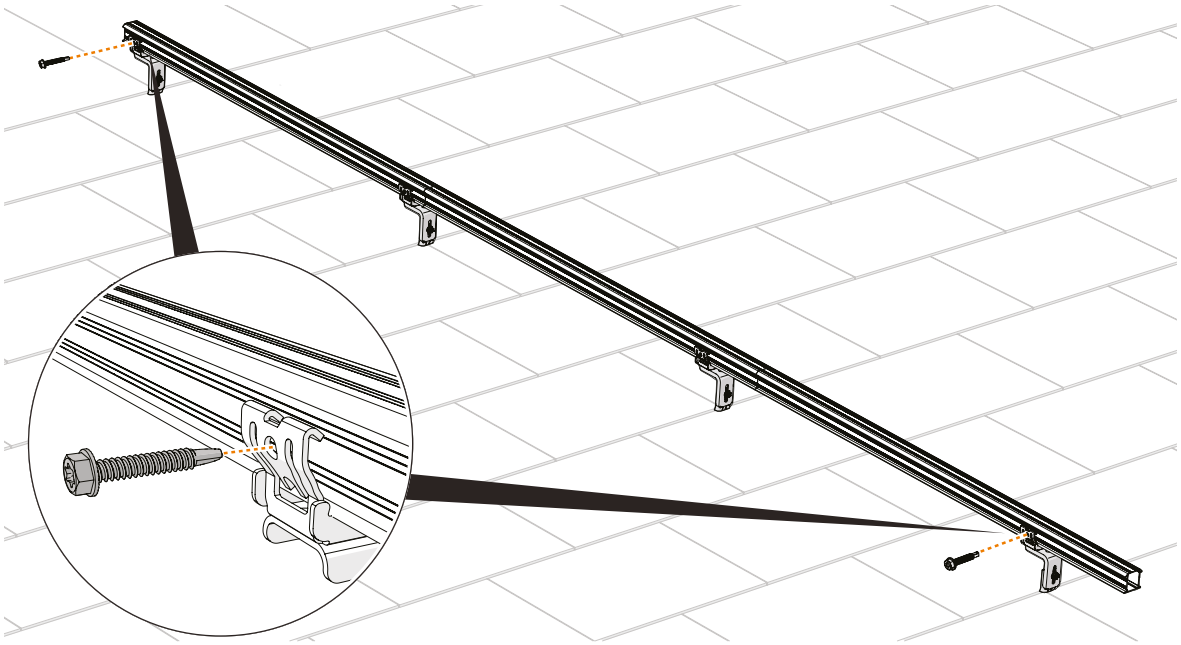

5 OPTIONAL: ATTACHING THE CABLE CLIPS

1 CLICK THE CABLE CLIP ONTO THE RAIL

Use one cable clip per solar panel.

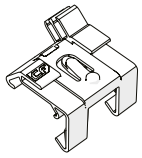

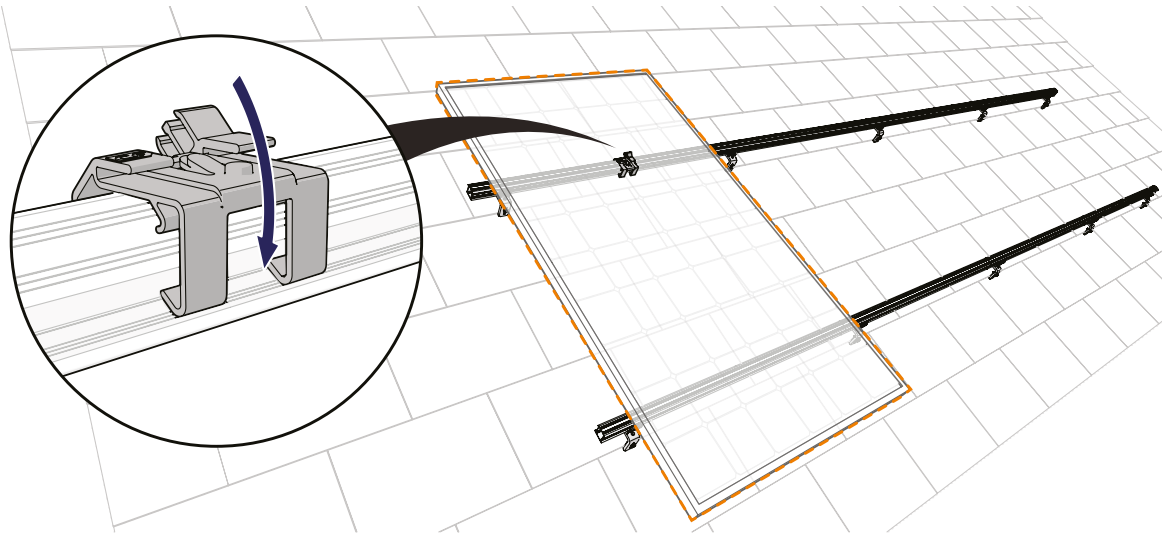

2 GUIDE THE CABLE THROUGH THE CLICK CONNECTION AND THE CABLE CLIP

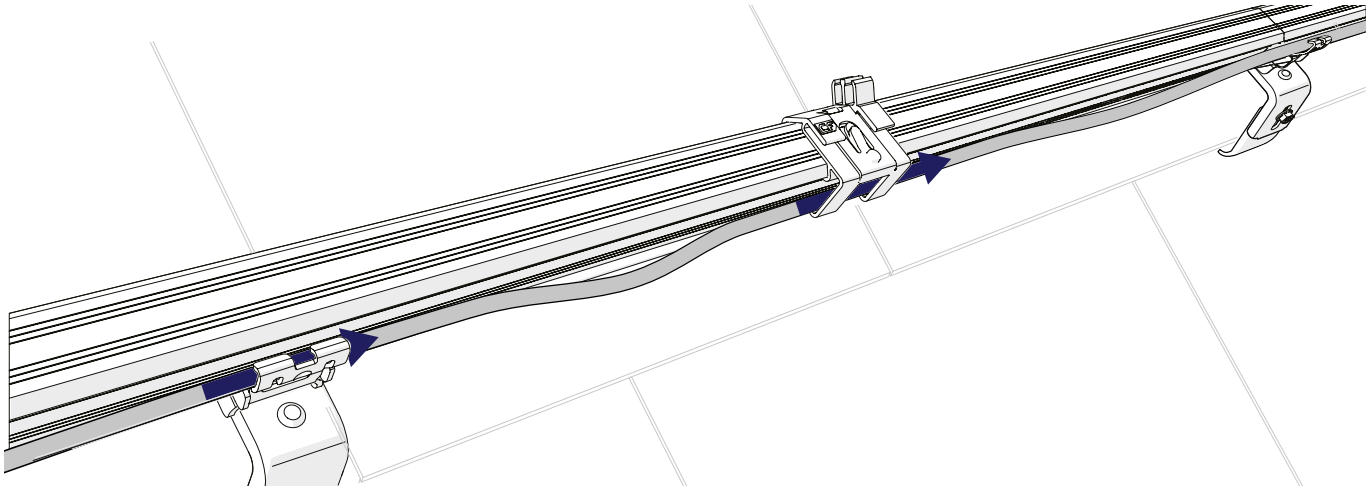

3 OPTIONAL: CLICK THE OPTIMISER ON THE CABLE CLIP

With vertical rail orientation you have to fix the cable clip by bending the edge of the mounting rail with adjustable pliers.

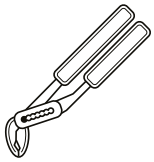

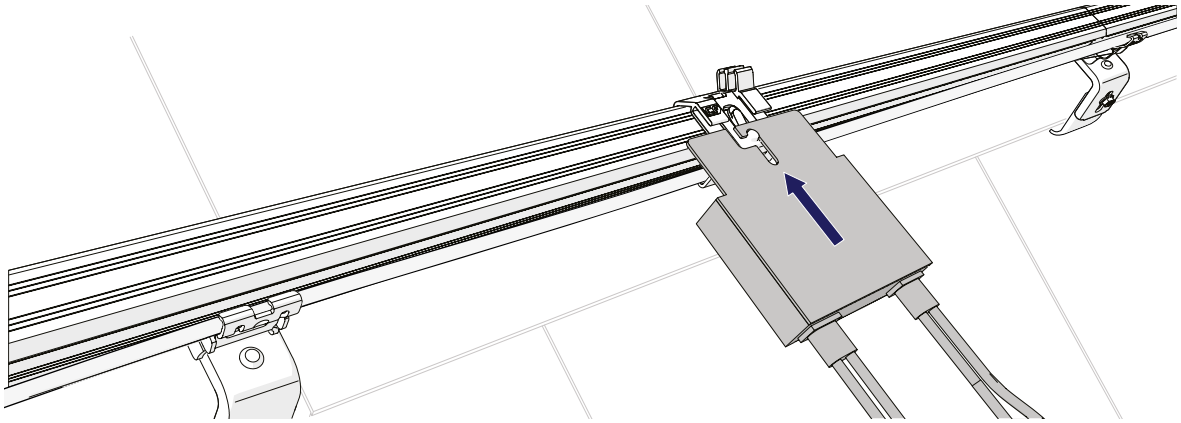

6 MOUNTING THE FIRST PANEL

1 OPTIONAL: CLICK THE AUXILIARY SET ON THE PANEL.

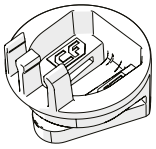

2×

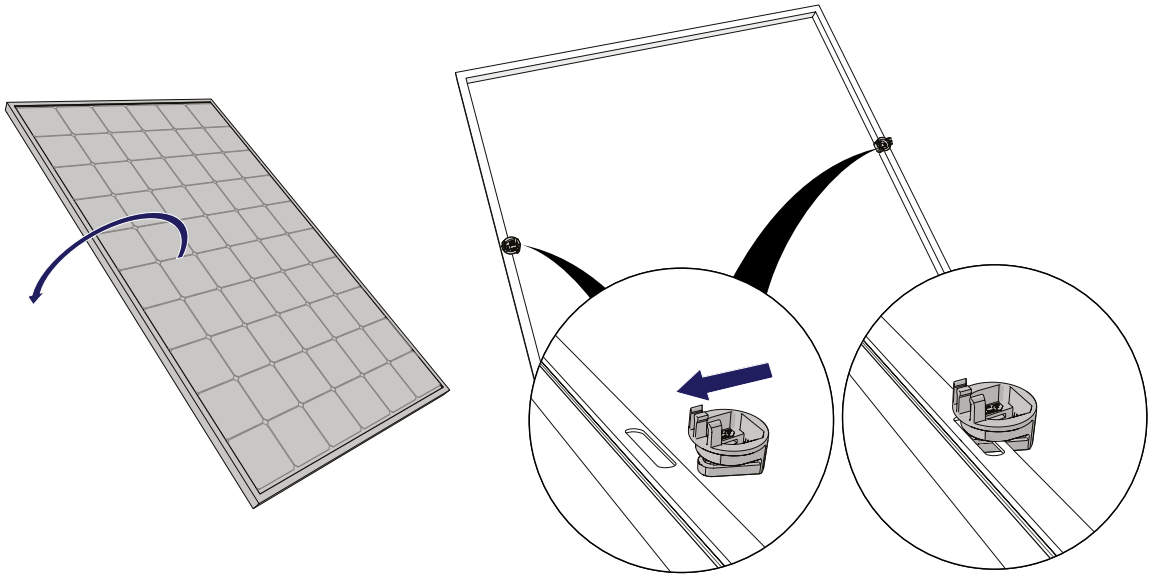

2 OPTIONAL: CLICK THE CABLES OF THE PANEL FIRMLY INTO THE CABLE CLAMP.

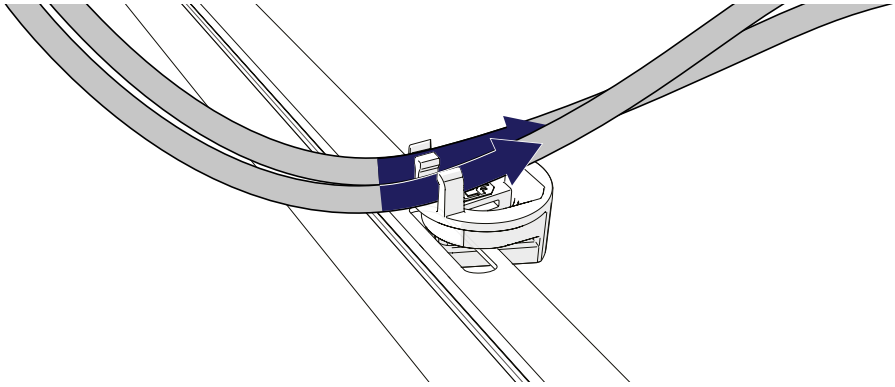

3 CLICK THE UNIVERSAL MODULE CLAMP ON THE RAILS.

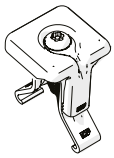

2×

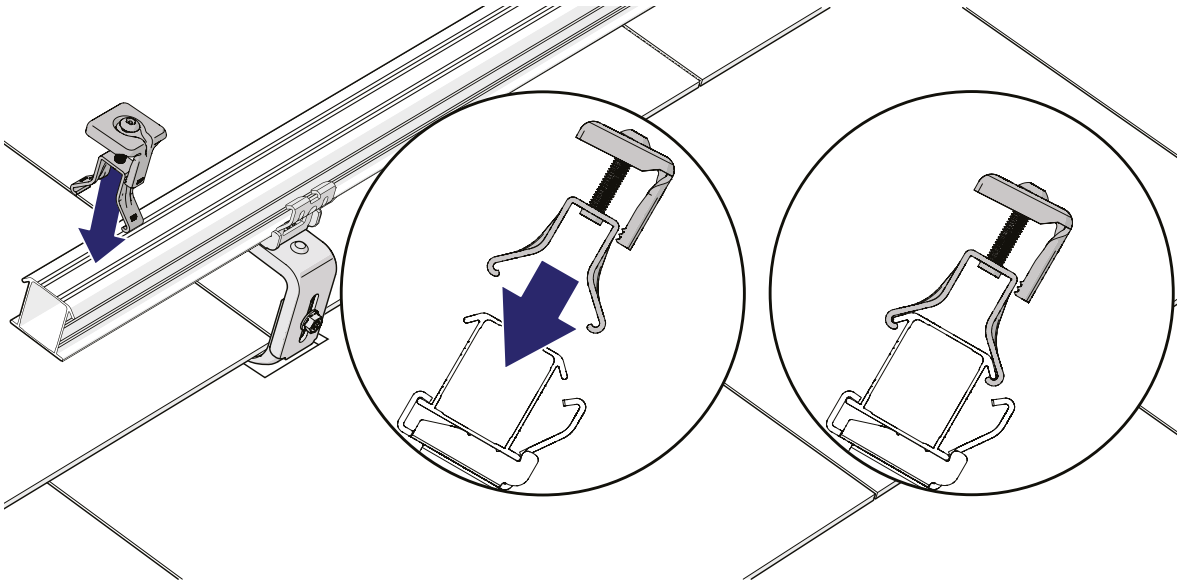

4 SLIDE THE END CAPS ONTO THE RAILS.

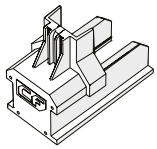

2×

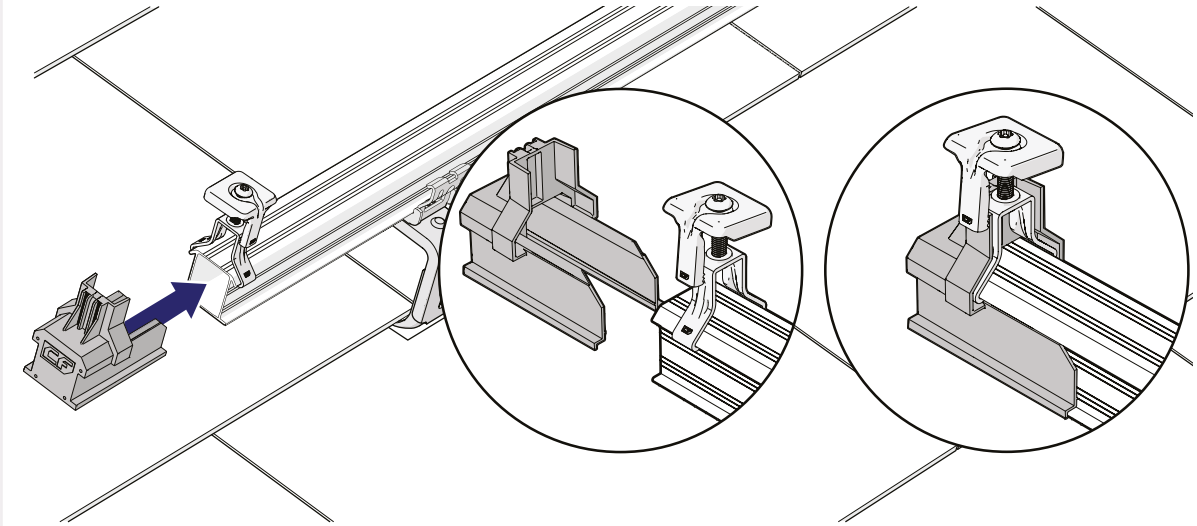

5 ROTATE THE UPPER PART OF THE MODULE CLAMP OVER THE END CAP.

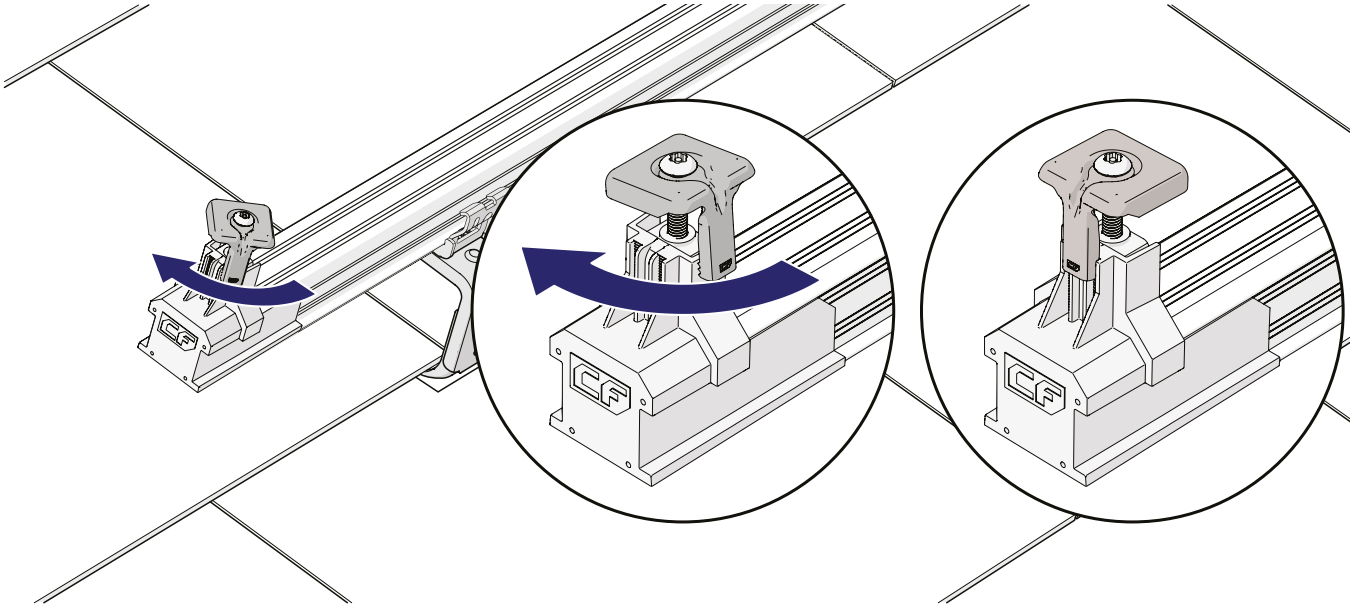

6 OPTIONAL: CLICK THE CABLES OF THE PANEL IN THE CABLE CLIP.

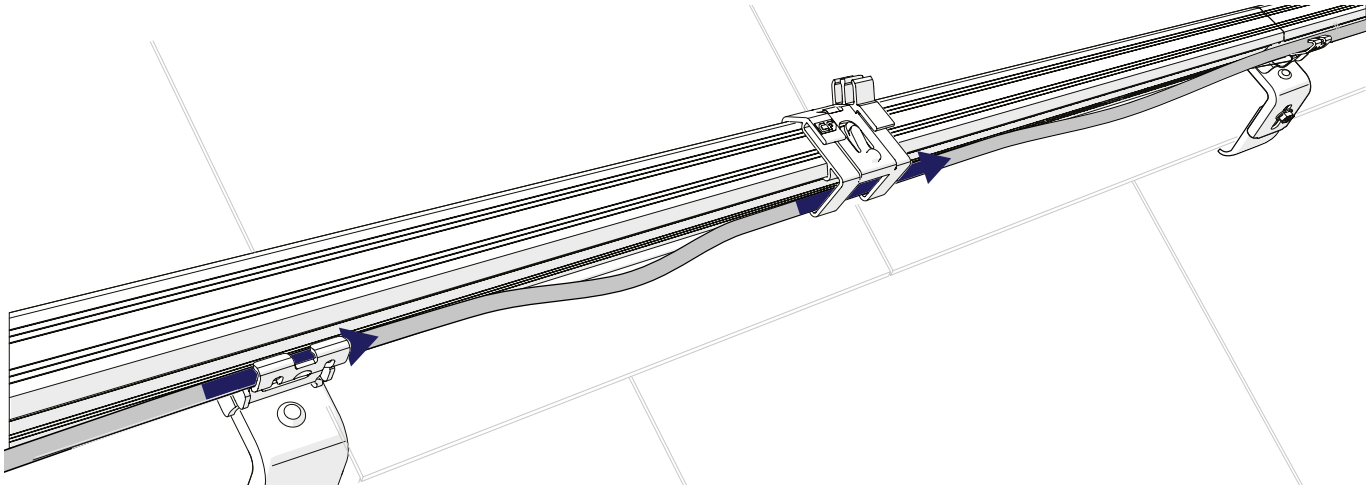

7 PLACE THE PANEL ON THE RAILS AND SLIDE THE PANEL AGAINST THE CLAMPS.

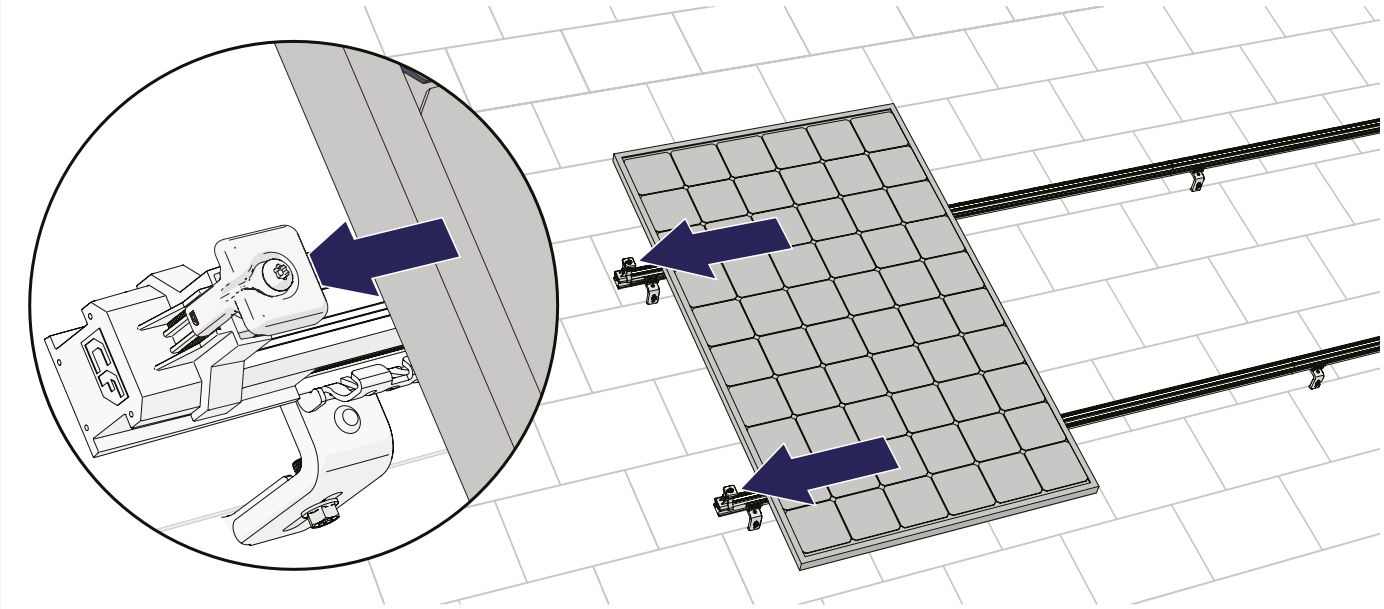

8 SCREW THE CLAMPS ONTO THE PANEL.

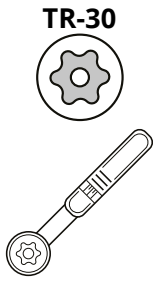

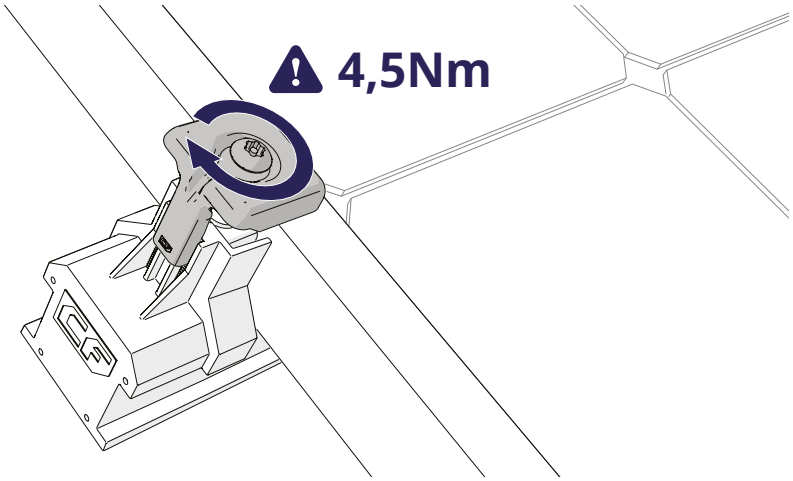

9 CLICK THE UNIVERSAL MODULE CLAMP ON THE RAILS.

Install the module clamp with the drainage channel of the module clamp pointing downwards.

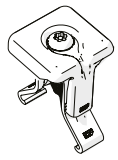

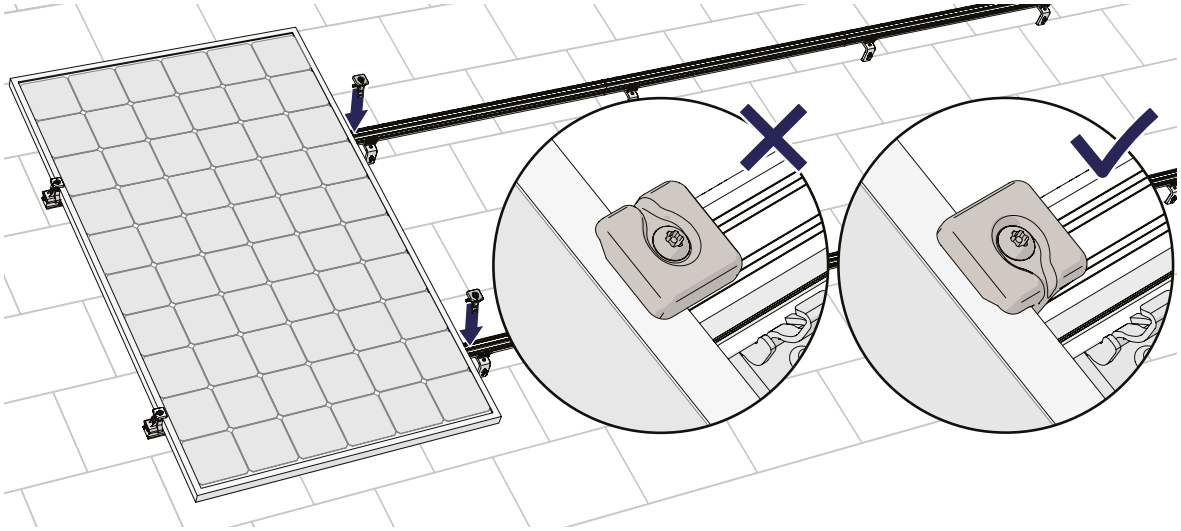

7 MOUNTING THE FOLLOWING PANELS

- [ ] Optional: Repeat steps 6.1. Click the Auxiliary set on the panel and 6.2. Click the cables of the panel firmly into the cable clamp.

1 PLACE THE NEXT PANEL ON THE RAILS AND SLIDE THE PANEL AGAINST THE CLAMPS.

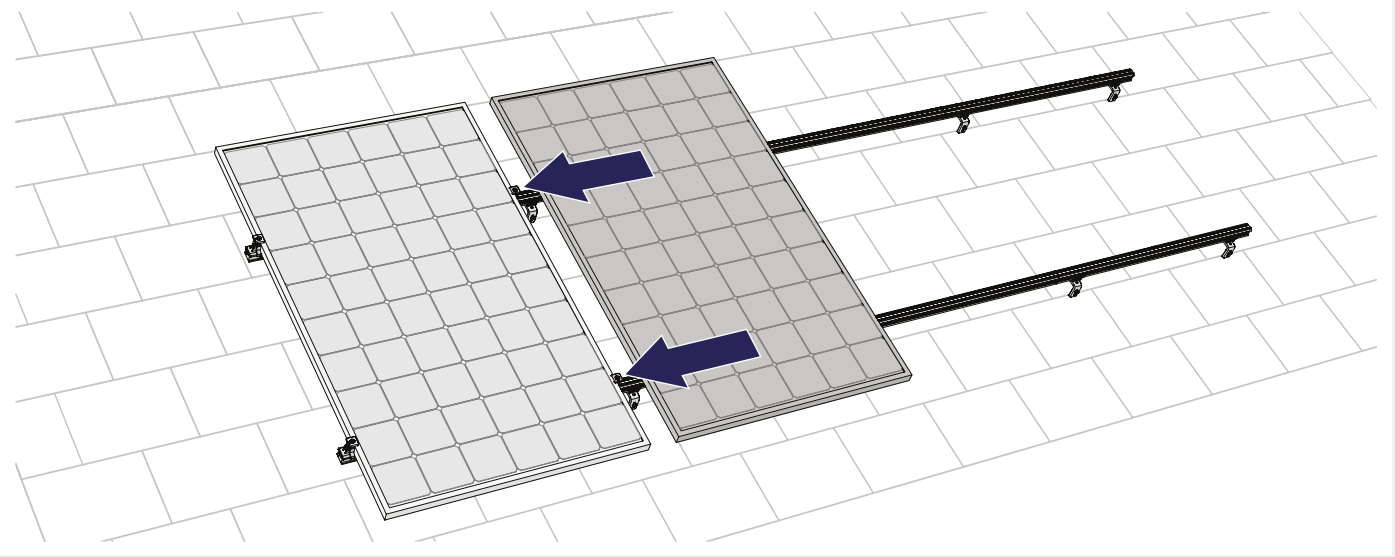

2 SCREW THE CLAMPS ONTO THE PANEL. APPLY A TORQUE OF 4.5 NM.

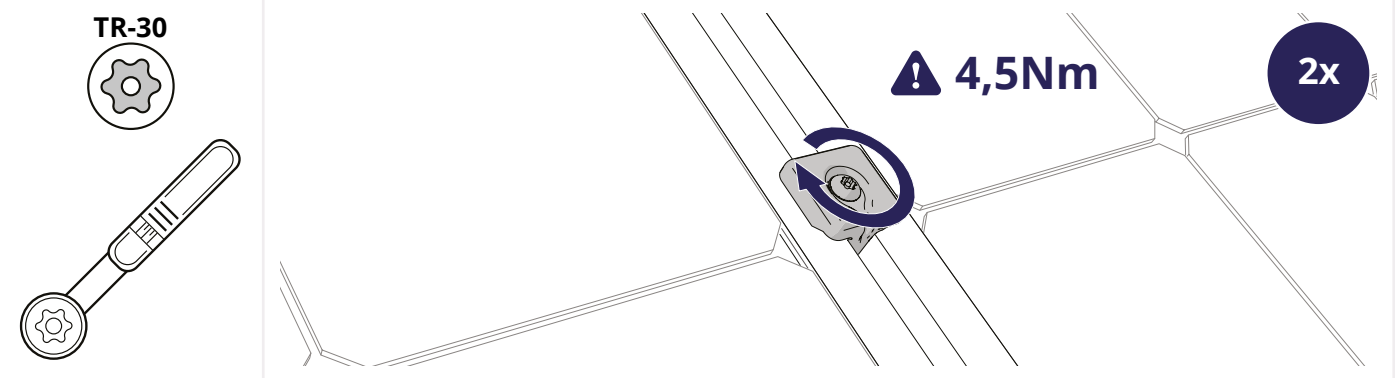

8 MOUNTING THE LAST PANEL

- [ ] Optional: Repeat steps 6.1. Click the Auxiliary set on the panel and 6.2. Click the cables of the panel firmly into the cable clamp.
- [ ] Repeat step 7.1. Place the next panel on the rails and slide the panel against the clamps.

1 OPTIONAL: SAW THE MOUNTING RAILS TO SIZE

- If the overhang is **less** than 250 mm beyond the last slate roof hook, keep a minimum of 20 mm to a maximum of 35 mm rail length overhang for mounting the end cap (art. no. 1008066(-B)).
- If the overhang is **more** than 250 mm beyond the last slate roof hook, extend the mounting rail so it goes 50 mm beyond the next slate roof hook and attach the mounting rail here.

The extra 50 mm provides sufficient length to fit an end cap (art. no. 1008066(-B)) to the mounting rails.

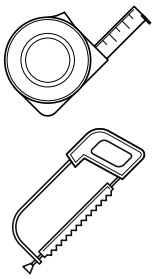

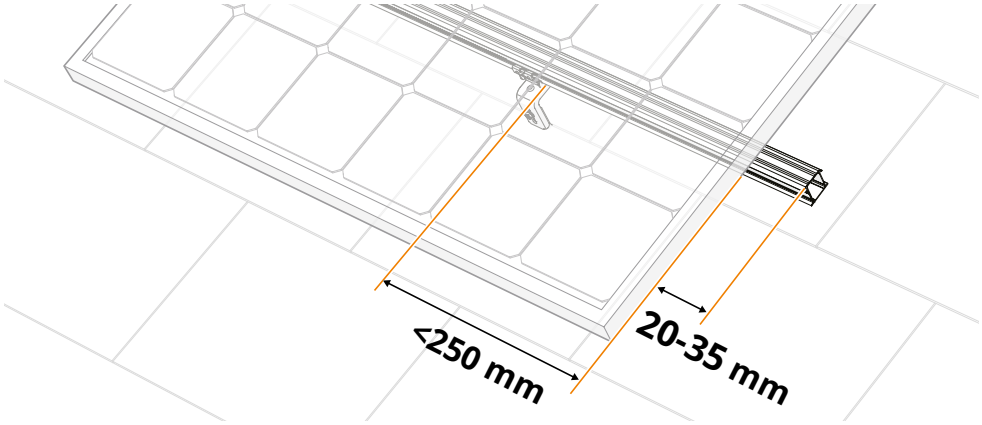

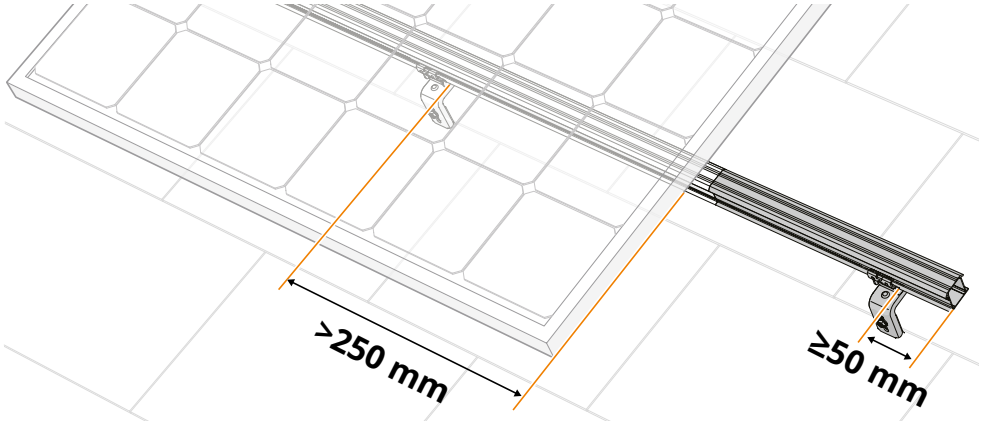

2 CLICK THE UNIVERSAL MODULE CLAMP ON THE RAILS.

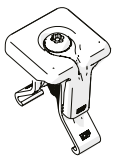

2×

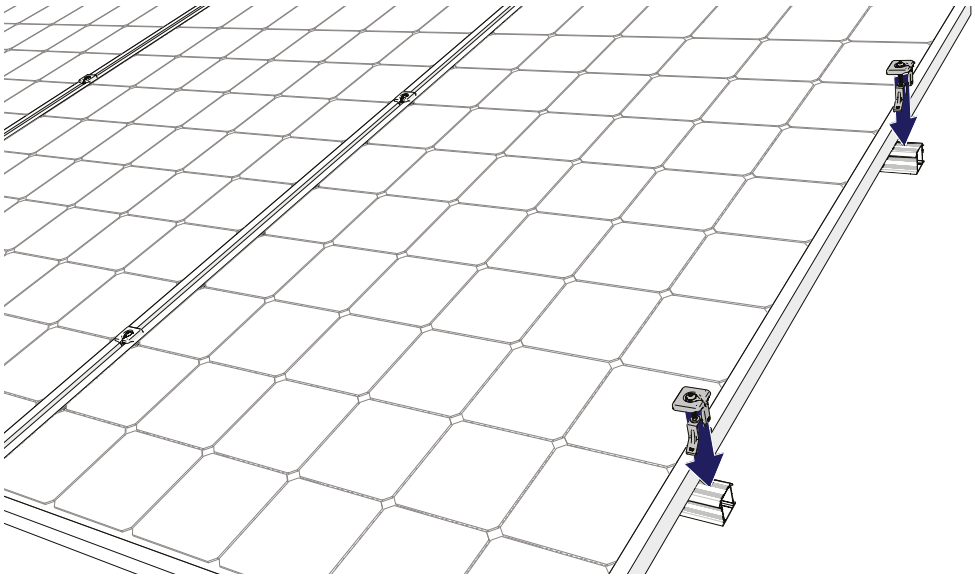

3 SLIDE THE END CAPS ONTO THE RAILS.

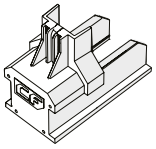

2×

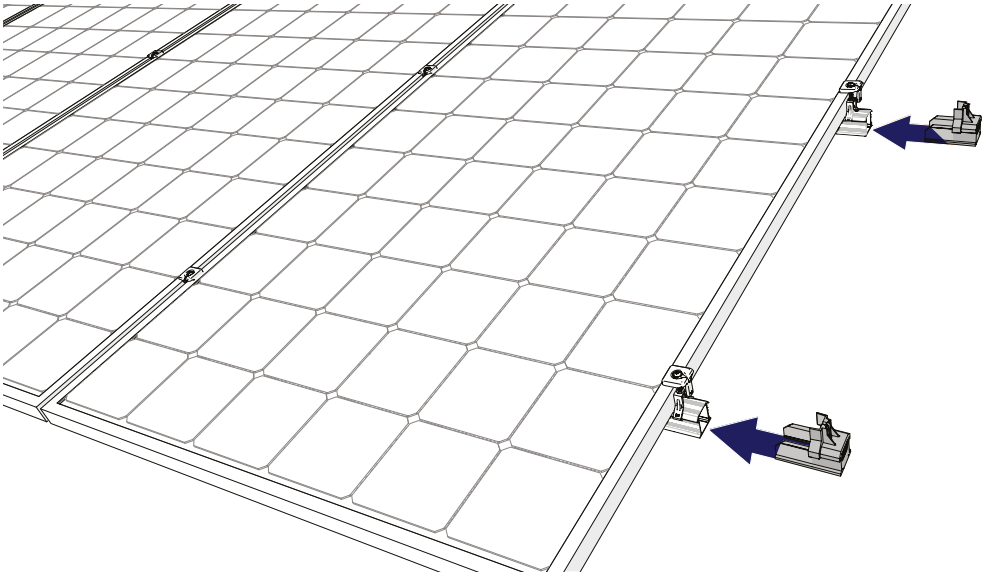

4 ROTATE THE UPPER PART OF THE MODULE CLAMP OVER THE END CAP.

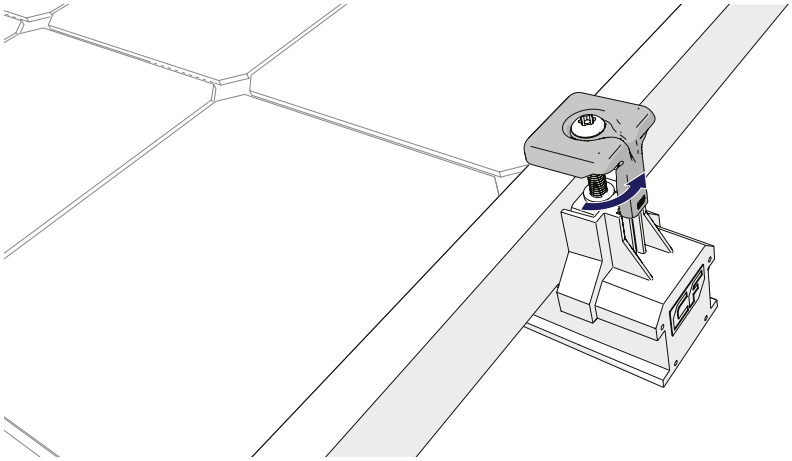

5 SCREW THE CLAMPS ONTO THE PANEL.

TR-30

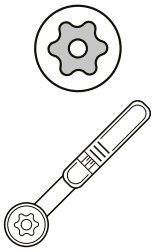

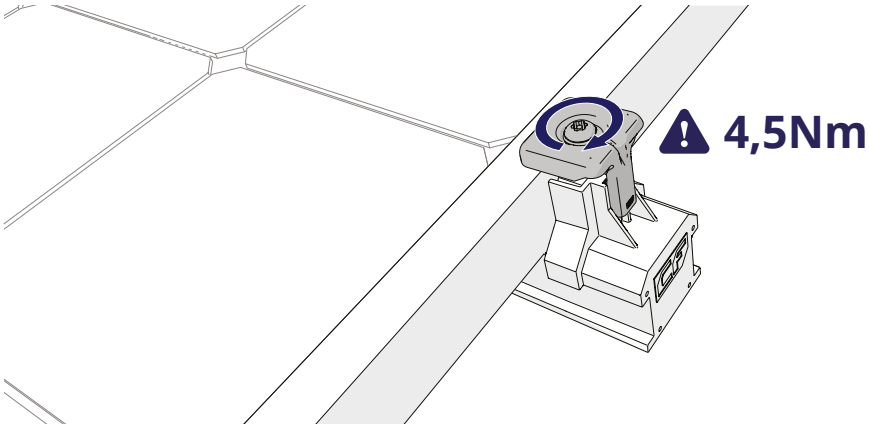

9 MOUNTING MULTIPLE ROWS

1 MOUNT EACH NEXT ROW AGAINST THE PREVIOUS ROW

- Always keep a minimum of 12 mm between each row of panels in the case of horizontally oriented rails, or each panel column in the case of vertically oriented rails.
- Always follow the project plan from the calculator.

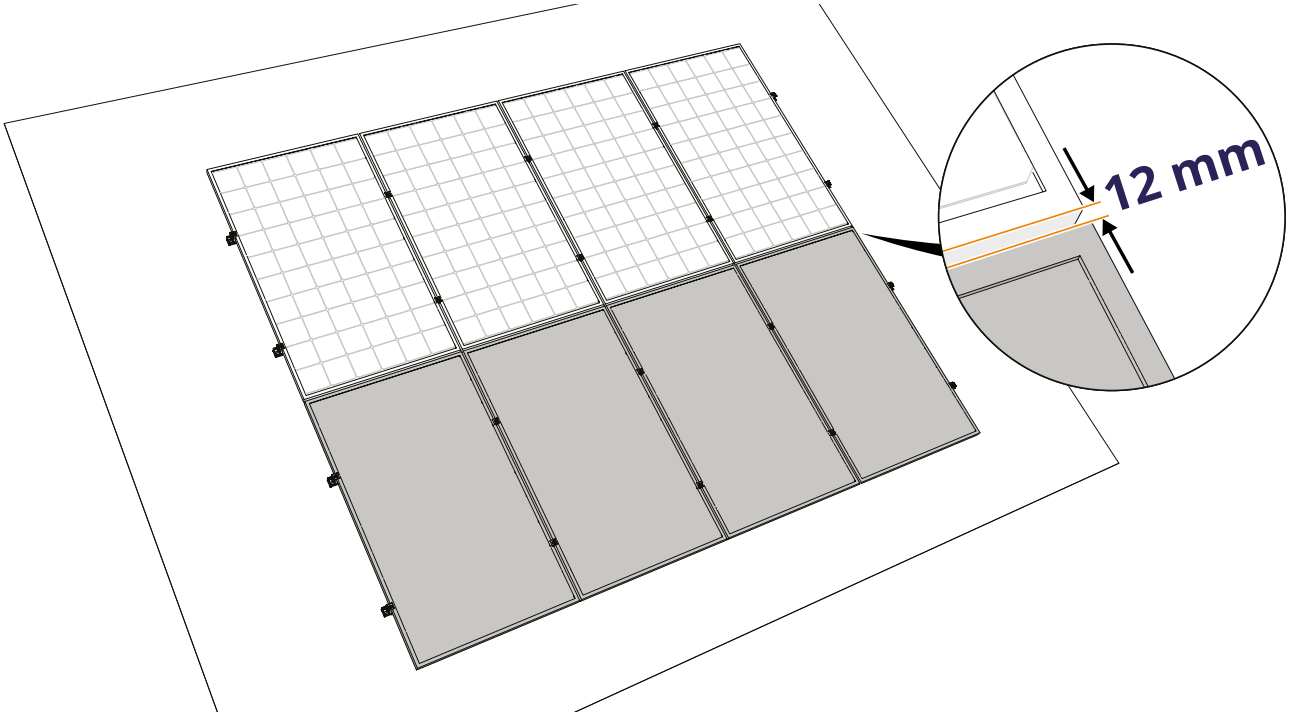

REMOVAL AND RECYCLING

GENERAL

Always follow local laws and regulations when dismantling the mounting system and disposing of it.

BUILDING VALUE FOR SOLAR PROFESSIONALS

Esdec
Londenstraat 16
7418 EE Deventer
The Netherlands

+31 850 702 000
info@esdec.com

050923