Communication HUB

LV-HUB Product Manual

Information Version: 2.2

Pylon Technologies Co., Ltd.
No. 73, Lane 887, ZuChongzhi Road, Zhangjiang Hi-Tech Park
Pudong, Shanghai 201203, China Zip Code: 201203
Tel: 021-51317699
Fax: 021-51317698
Email: service@pylontech.com.cn
Website: http://www.pylontech.com.cn

This manual introduces LV-Hub from Pylontech. LV-Hub is a communication hub for US2000/US3000 Lithium-Ion Phosphate Battery storage system. Please read this manual before you install the battery and follow the instruction carefully during the installation process.

CONTENT

1. INTRODUCTION 3
2. LV-HUB 3
2.1 PORTS: 4
2.2 DEFINITION OF RJ45 PORT PIN 5
2.3 LED INDICATORS INSTRUCTIONS 5
3. OPERATION 6
3.1 PROTOCOL 6
3.2 CABLES CONNECTION FOR US2000/US3000 UNDER RS485 OR CANBUS. 6
3.2.1 CABLES CONNECTION FOR RS485 6
3.2.2 CABLES CONNECTION FOR CAN (SINGLE HUB) 7
3.3 CABLES CONNECTION FOR US2000C/US3000C/UP5000/US5000 UNDER CANBUS 8
3.4 CABLES CONNECTION FOR MULTIPLE HUBS UNDER CANBUS. 9
ANNEX 1: CABLES CONNECTION FOR US2000/US3000 UNDER RS485 10
ANNEX 2: CABLES CONNECTION FOR US2000/US3000 UNDER CAN 11
ANNEX 3: CABLES CONNECTION FOR CAN (MULTI HUB) 12
ANNEX 4: CABLES CONNECTION FOR US2000C/US3000C/UP5000/US5000 UNDER CANBUS 13

1. Introduction

LV-Hub is the CAN/RS485 communication hub for multiple 48V battery groups in parallel connection.

Fit Description: US2000 / US3000 / Phantom-SA / US1800.

2. LV-Hub-A

No.	Item	Parameter
1	Operating voltage range	48 Vdc
2	Communication	CAN/RS485
3	System Consumption	2W
4	Size	442*190*44mm
5	Protection degree	IP20
6	Weight	3.0kg
7	Operation Life	15 years
8	Working temperature	-20~60℃
9	Storage temperature	-40~80℃
10	CAN (Max 25 groups)	Baud rate: 500K; terminal resistance: 0/120Ω
11	RS485 (Max 5 groups)	Baud rate:9600/115200

2.1 Ports:

No.	Part	Silk-screen	Function
1	Dry signal		Function reserve
2	Reset Switch Button	RESET	Press 2 seconds and then system will restart.
3	Dip switch	1 - 6	Dip 6: Up: CAN OUT terminal resistance 120Ω Down: 0Ω
4	RJ45	CAN OUT	CAN output port (only upper port is for using);
5	RJ45	RS232	Debug
6	RJ45	CAN IN	Connect to port **0** (only for CAN communication);
7	LED	STATUS	Please see 2.3.
8	LED	NUMBER/BIN 1-4	Shows linked in battery group quantity with binary code. Please see 2.3.
9~16	RJ45	0; 1; 2; 3; 4; 5; 6; 7.	Only uses 0~5. Please see 3.2.
17	Switch	ON/OFF	Turns the LV-HUB ON/OFF.
18	48VDC input	48V DC	Power supply: take 48VDC power from outside (from AC/DC adaptor).

2.2 Definition of RJ45 Port Pin

No.	CAN OUT	RS485	RS232 Pin
1	---	---	---
2	GND	---	---
3	---	---	TX
4	CANH	---	---
5	CANL	---	---
6	---	GND	RX
7	---	RS485A	---
8	---	RS485B	GND

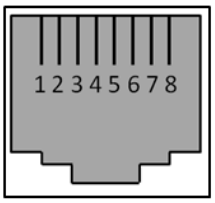

RJ45 Port

RJ45 Plug

2.3 LED Indicators Instructions

Status				
			●	Only the HUB is turned ON, it lights once.
			●	No battery connected or at least one group is off line. When battery group is reduced it will alarm (in red), but when battery group is added in it will no alarm.
1	2	3	4	Green flash; connected battery groups number
●				1 group
	●			2 groups
●	●			3 groups
		●		4 groups
●		●		5 groups
	●	●		6 groups
●	●	●		7 groups

3. Operation

3.1 Protocol

CAN: *CAN-Bus-protocol-PYLON-low-voltage-V1.2-20180408* or above.

RS485: *RS485-protocol-pylon-low-voltage-V3.1-20180408* or above.

3.2 Cables Connection for US2000/US3000 under RS485 or CANBUS.

3.2.1 Cables Connection for RS485

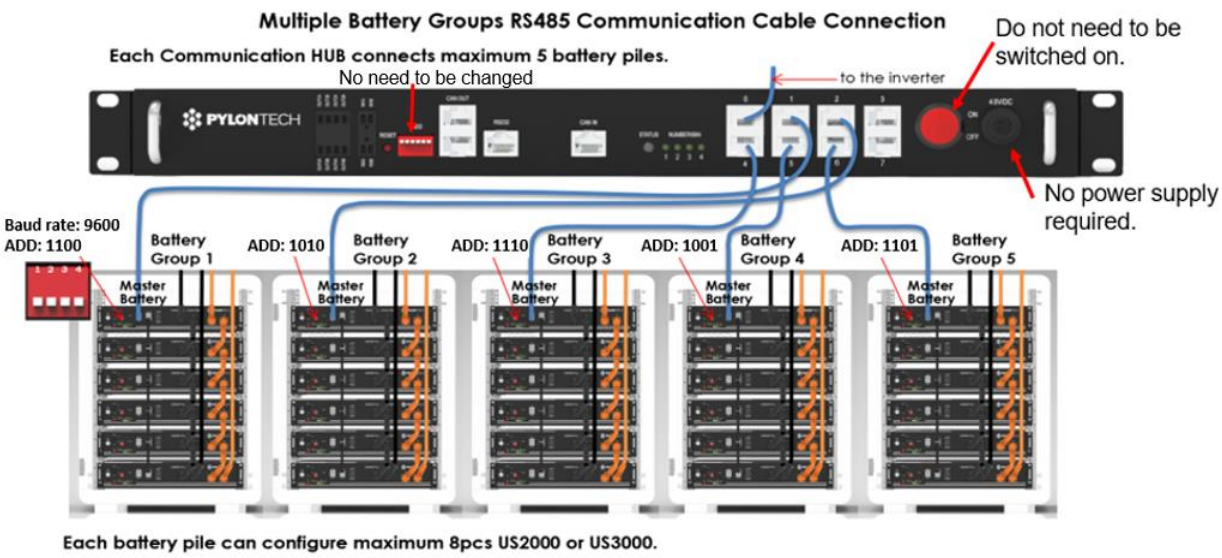

- Each battery group can configure maximum 8pcs US2000B Plus or 8pcs US3000.
- LV-Hub-A configures maximum 5 group batteries.
- RS485 communication needn't additional cable and power just a simple hub is enough.

- When each battery group's current is >120A, this battery group must configure 2 pair external power cables like the diagram.

- The details of ADD Switch setting also can see the menu of battery.

3.2.2 Cables Connection for CAN (single HUB)

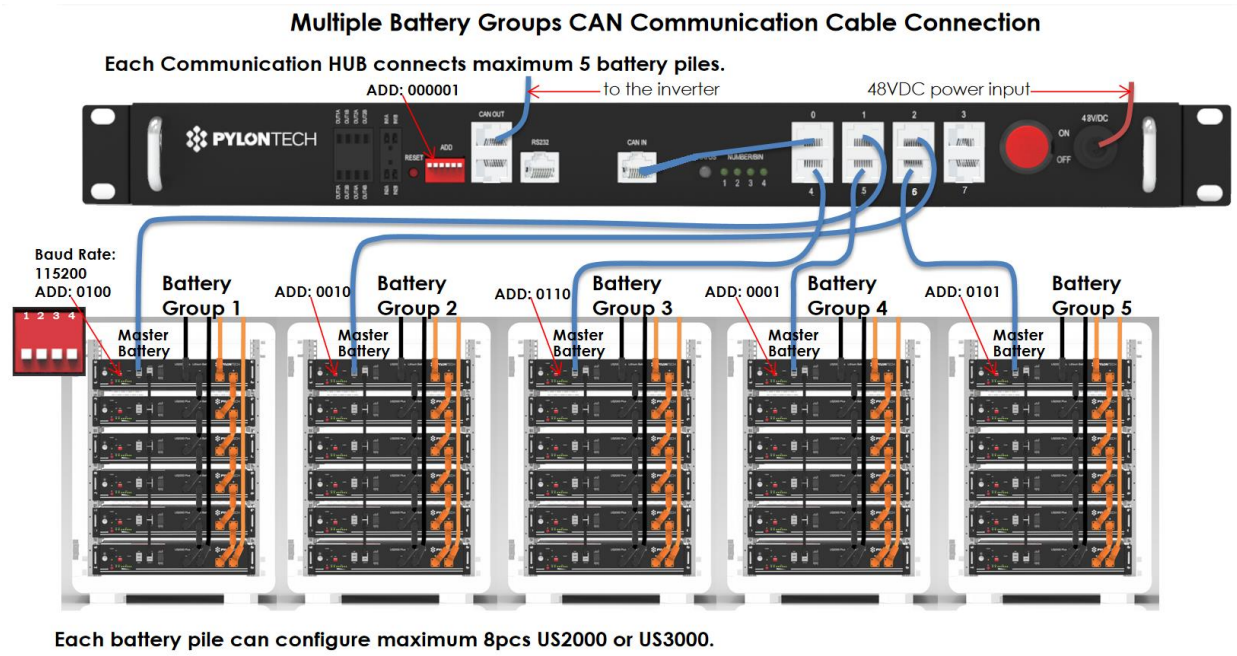

- Each battery group can configure maximum 8pcs US2000B Plus or 8pcs US3000.
- LV-Hub-A configures maximum 5 group batteries.
- When each battery group's current is >120A, this battery group must configure 2 pair external power cables like the diagram.
- The details of ADD Switch setting also can see the menu of battery.
- When using with SMA SUNNY ISLAND, the ADD on HUB(or master HUB if there are multiple HUBs) must be 000011(for B14V0105 presenting on product label) or 000101 (for B14V0106 presenting on product label).

3.3 Cables Connection for US2000C/US3000C/UP5000/US5000 under CANBUS

The specific cable connection way please refer to the related battery operation manual.
Connect power cable first:

1) each pair of cable hold max 100A constant current. Connect enough pairs of cable based on calculation of system current.
2) Suitable protection breaker between battery system and inverter is required.
3) connect power cable of LV-HUB

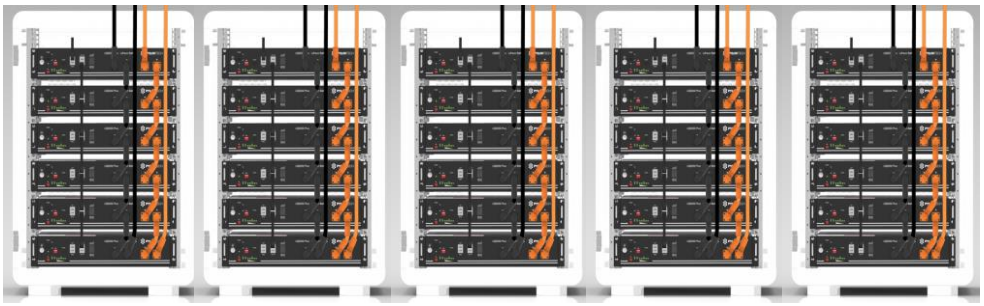

4) Make sure all dipswitch is X0XX, then turn ON batteries.
5) After all batteries running and buzzer of master battery in group1 rings 3 times. Means all groups are online.
6) Change the dip switch of **master battery in group1** to X1XX. Then connect communication cable between LV-HUB and master battery in group 1.
7) Change the dip switch of LV-HUB to 000001, then turn on LV-HUB.

*Below communication cable shall be 8 pin direct-pin cable:

a. Between battery modules
b. Between LV-HUB **Port 0** to LV-HUB **CAN IN**

*Below communication cable shall has **first 3 pin NULL** or use **WI0SCAN30RJ1** cable inside external cable kits:

a. Between Group 1 Master Battery **A/CAN** to LV-HUB **Port 1**.

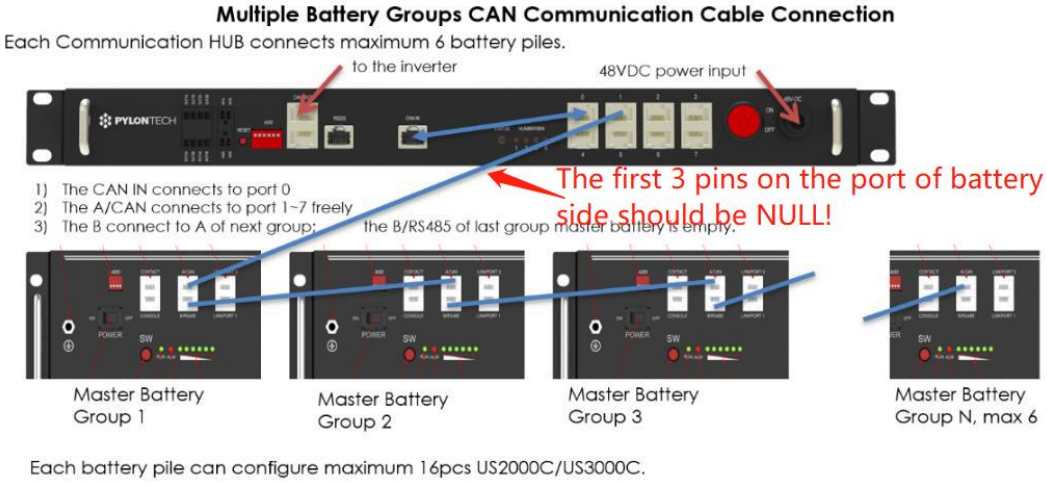

Note: When using US2000C/US3000C/UP5000/US5000, the multiple group connection under RS485 communication **DONOT** require a LV-HUB. The wiring diagram please refer to the corresponding battery model operation manual.

3.4 Cables Connection for Multiple HUBs under CANBUS.

Multiple HUBs CAN Communication Cable Connection

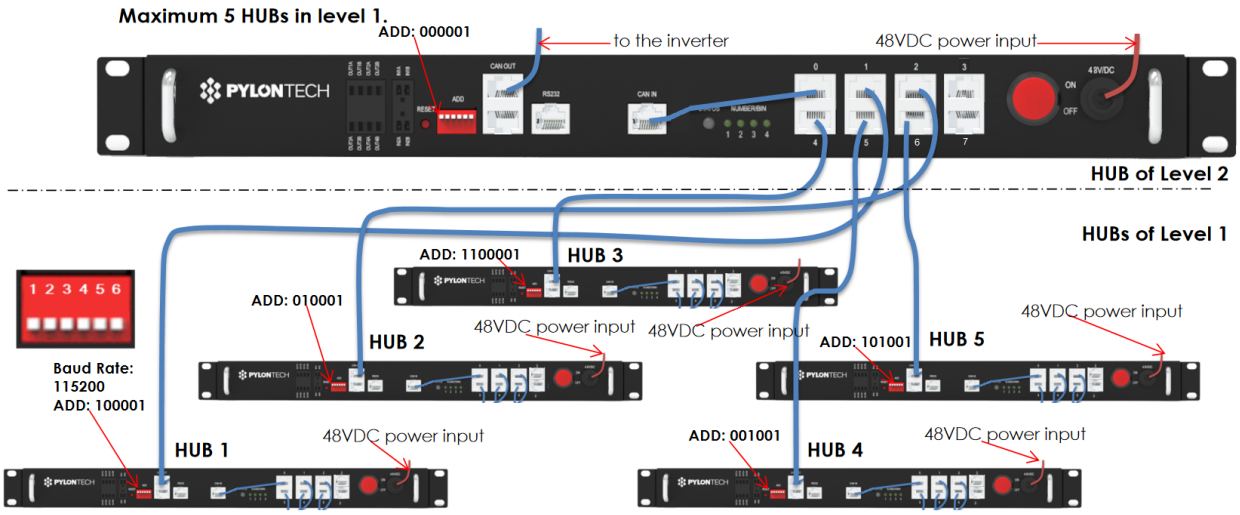

Battery bank can configure maximum 200pcs US2000 or US3000.

In above picture, all communication cable connect in between shall be 8 pin direct-pin cable.

Annex 1: Cables Connection for US2000/US3000 under RS485

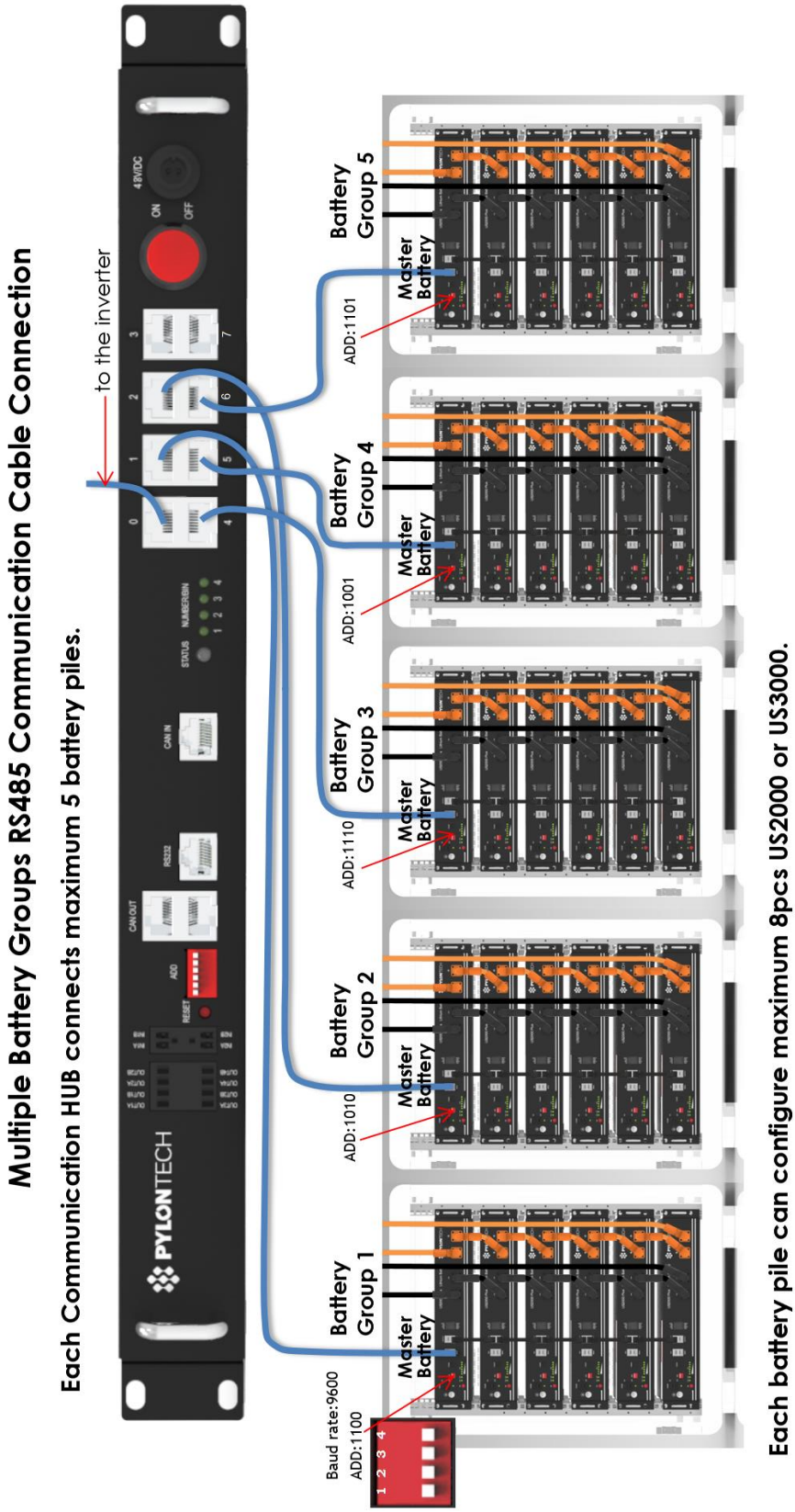

Annex 2: Cables Connection for US2000/US3000 under CAN

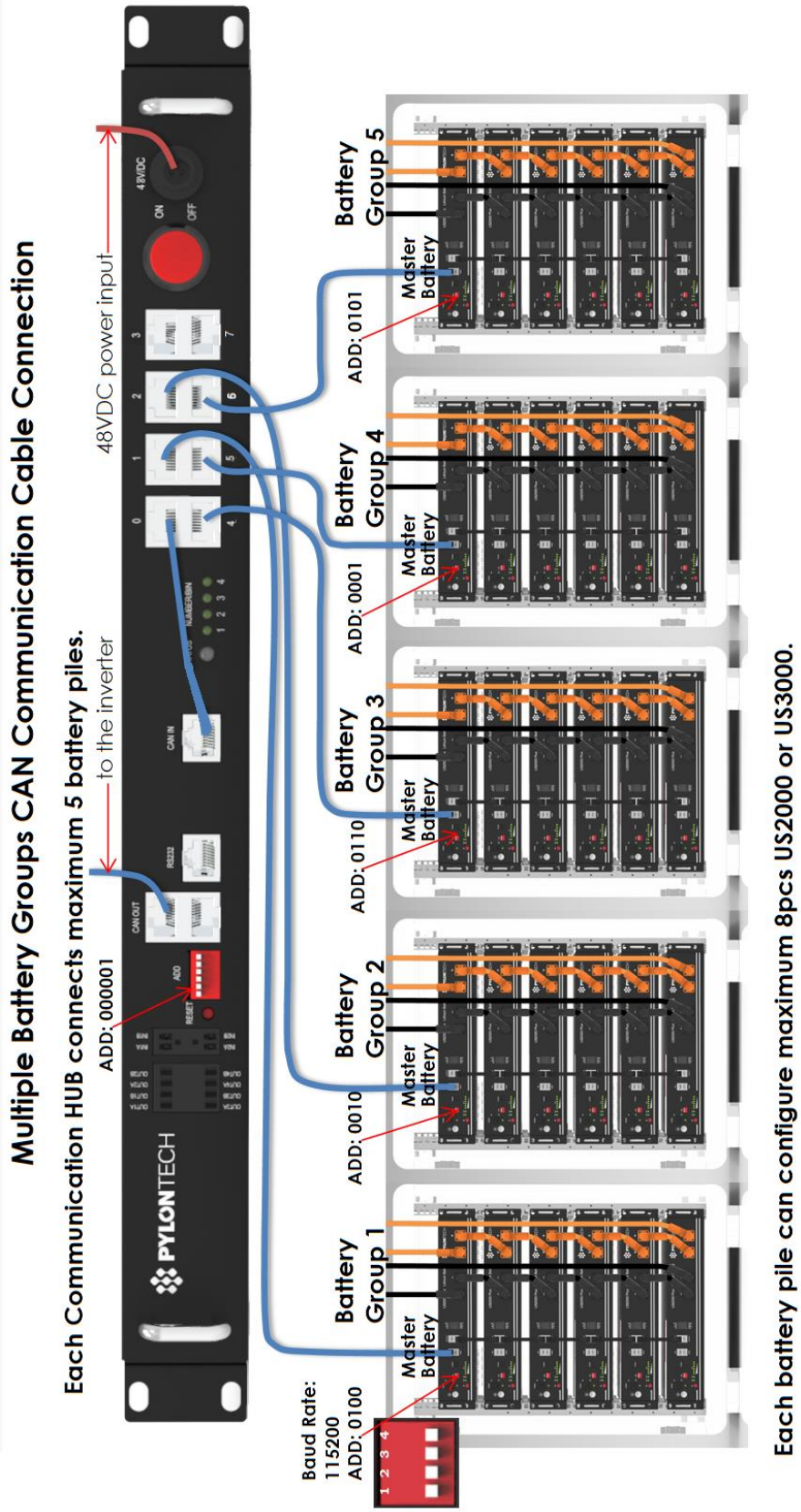

Annex 3: Cables Connection for CAN (multi HUB)

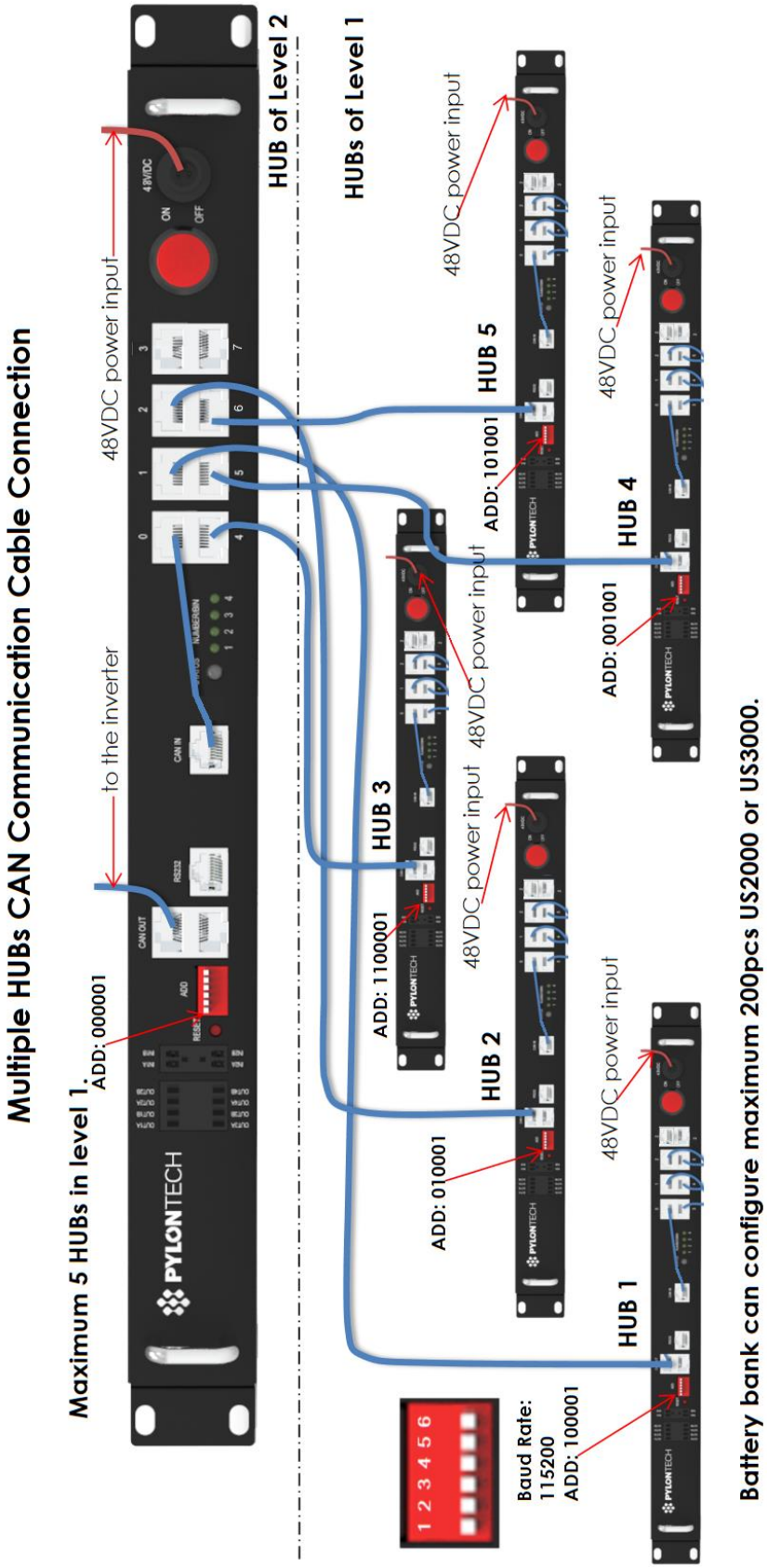

Annex 4: Cables Connection for US2000C/US3000C/UP5000/US5000 under CANBUS

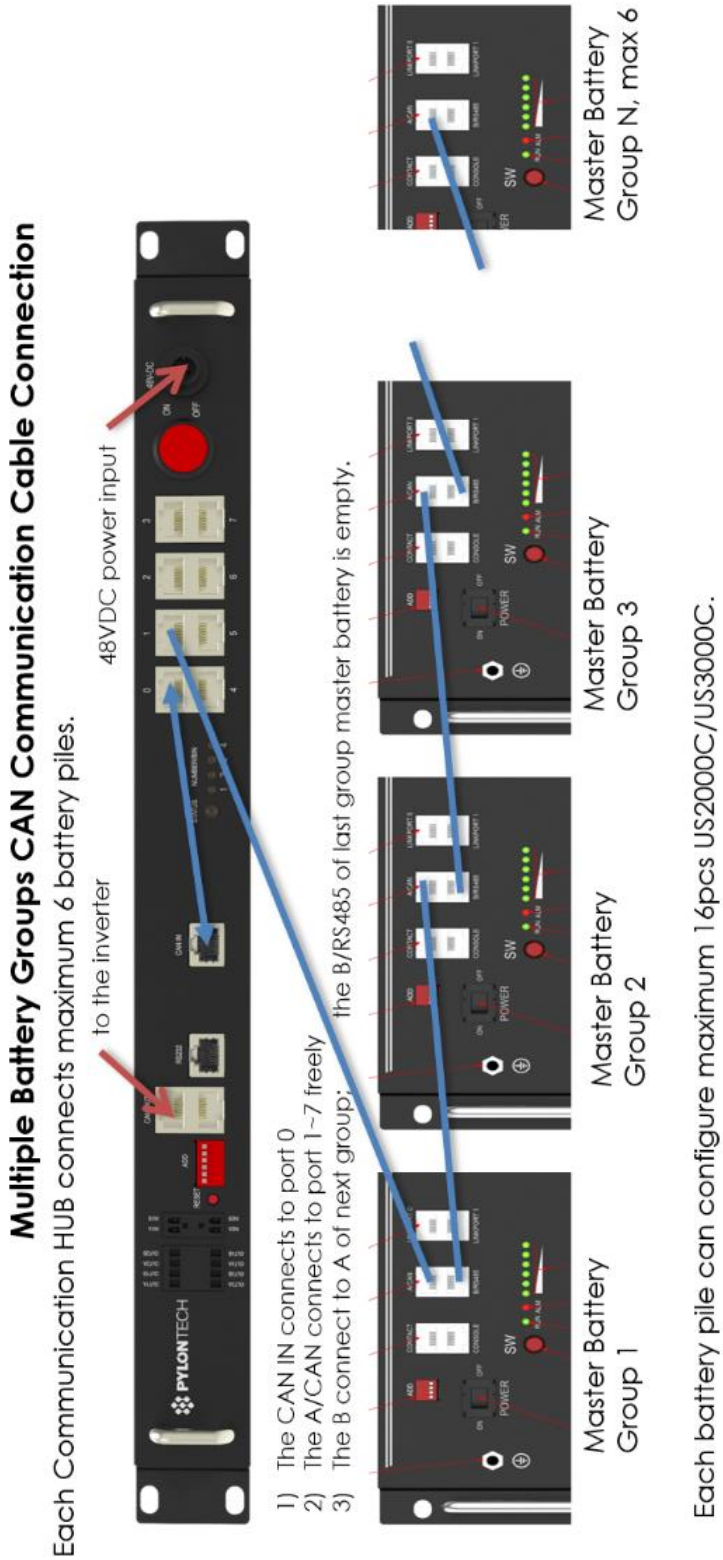

Pylon Technologies Co., Ltd.
No. 73, Lane 887, ZuChongzhi Road, Zhangjiang Hi-Tech Park
Pudong, Shanghai 201203, China
T +86-21-51317699 | **F** +86-21-51317698
E service@pylontech.com.cn
W www.pylontech.com.cn