Calculation hanger bolt and solar fastener length

Hanger bolt

Hanger bolt length L_4 = Minimum screw-in depth* D_S + Profile height** D_P + Thread length L_2 + Hex drive L_3

The length of the hanger bolt must be selected so that the bolt shaft protrudes only slightly above the corrugated fibre cement. The rubber seal must sit below the threaded area so it can fulfil its sealing function.

If the M10 / M12 thread penetrate the corrugated fibre cement, we recommend applying thread sealant to the thread between the nut and seal to prevent capillary effects.

In order to tighten the flange nut securely, it must engage sufficiently in the M10 / M12 thread.

* *Minimum screw-in depth: M10 ≥ 40 mm / M12 ≥ 48 mm*
** *Profile height of corrugated fibre cement*

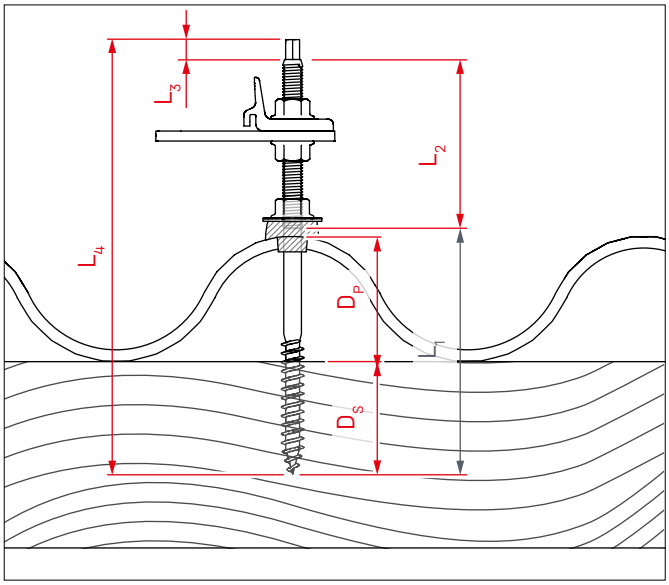

Illustration: hanger bolt with Climber Set

Hanger bolt [mm]							
Climber Set for SingleRail							
Thread	L_1 shank + wood thread	Shank length	Wood thread length	L_2 Thread length	L_3 Hex drive	L_4 Total length	Product number
M10	**85**	**18**	**67**	85	10	180	2003272
	105	**38**	**67**	85	10	200	2003273
	155	**88**	**67**	85	10	250	2003274
M12	**90**	**10**	**80**	100	10	200	2003275
	140	**40**	**100**	100	10	250	2003276
	140	**40**	**100**	150	10	300	2003277
with adapter plate for SolidRail							
M10	**85**	**18**	**67**	85	10	180	2000120
	105	**38**	**67**	85	10	200	2000121
	155	**88**	**67**	85	10	250	2000122
M12	**90**	**10**	**80**	100	10	200	2000123
	140	**40**	**100**	100	10	250	2000124
	140	**40**	**100**	150	10	300	2000125

Solar fastener

Solar fastener length L_1 = Minimum screw-in depth* D_S + Profile height** D_P

* Minimum screw-in depth: In wood ≥ 32 mm; in steel, at least three complete threads into the profile - the drill tip must penetrate the steel beam.
** Trapezoidal sheet metal, sandwich panels, corrugated sheet metal, corrugated fibre cement

The screw length L_1 must be selected so that the minimum screw-in depth D_S is achieved in the wood or steel profile. The M10 thread length L_2 must be selected depending on the distance between the system and the roof.

In wooden substructure

Trapezoidal sheet metal / sandwich panels / corrugated sheet metal

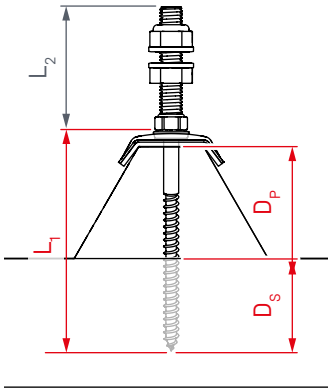

Solar fastener with calotte [mm] - L1 = Ø 8 mm

L_1 Screw length = shank + wood thread	Shank length	Wood thread length	L_2 M10 × 50 Product number	L_2 M10 × 70 Product number
80	32	48	1002228	1004286
100	40	60	1001770	1006125
130	52	78	1001511	1005906
150	60	90	1000807	-
180	72	108	1001627	-
200	80	120	1002749	1005906

Corrugated fibre cement

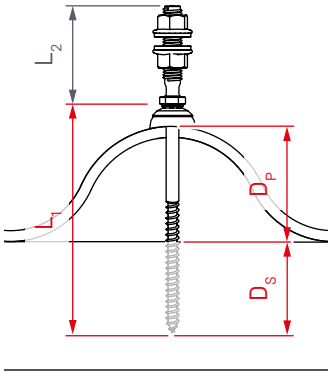

Solar fastener with fibre cement seal [mm] - L1 = Ø 8 mm

L_1 Screw length = shank + wood thread	Shank length	Wood thread length	L_2 M10 × 50 Product number	L_2 M10 × 70 Product number
80	32	48	1002130	-
100	40	60	1003029	-
130	52	78	1001759	1006058
150	60	90	1002001	1005263
180	72	108	1002533	-
200	80	120	-	1001420

In steel substructure

Trapezoidal sheet metal / sandwich panels / corrugated sheet metal

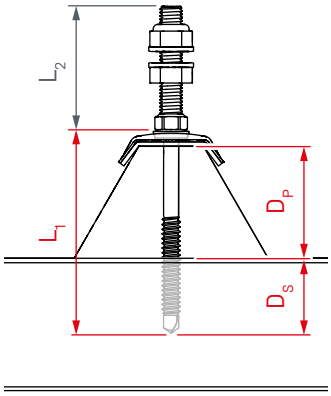

Solar fastener with calotte [mm] - L1 = Ø 8 mm

L_1 Screw length = shank + steel thread + drill bit	Shank	Steel thread length	Drill bit length	L_2 M10/50 Product number	L_2 M10/70 Product number
85	20	57	8	2003018	2003032
115	50	57	8	2003019	2003033
155	90	57	8	2003020	2003034
195	130	57	8	2003021	2003035

Corrugated fibre cement

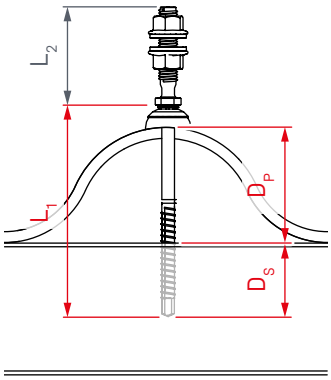

Solar fastener with fibre cement seal [mm] - L1 = Ø 8 mm

L_1 Screw length = shank + steel thread + drill bit	Shank length	Steel thread length	Drill bit length	L_2 M10/50 Product number	L_2 M10/70 Product number
85	20	57	8	2003013	2003028
115	50	57	8	2003012	2003029
155	90	57	8	2003016	2003030
195	130	57	8	2003017	2003031