Kraus & Naimer

BLUE LINE switchgear

since 1907

Switch Disconnectors for *Photovoltaic Systems*

NOW EVEN BIGGER RANGE

Detailed information relating to application, rating, mounting and correct installation

For free expert advice and technical help call our team

01635 262626

www.krausnaimer.co.uk

DC SWITCH-DISCONNECTOR SELECTION TABLES - UTILISATION CATEGORY DC-21B

SINGLE STRING

Page	450V	500V	650V	800V	920V	1000V	Order code
2	25A	21A	20A	18A	11A		**KG20 T104/D-P003 KL51V**
2	28A	28A	25A	23A	15A	12A	**KG32 T104/D-P003 KL51V**
2	40A						**KG41 T104/D-P003 KL11V**
3				21A		20A	**KG20B T106/D-P003 KL11V**
3			27A	27A		25A	**KG32B T106/D-P003 KL11V**
3		40A	40A	28A			**KG41B T106/D-P003 KL11V**
4						26A	**KG32B T108/D-P003 KL11V**
4					40A	35A	**KG41B T108/D-P003 KL11V**
5	60A	60A	60A				**KG80C T106/D-P003 STM**
5				60A			**KG80C T108/D-P003 STM**

TWO STRING - RATINGS PER STRING

Page	220V	280V	340V	400V	460V	500V	Order code
6	25A	21A	20A	18A	11A		**KG20 T104/GB-P103 KL51V**
6	28A	28A	25A	23A	15A	12A	**KG32 T104/GB-P103 KL51V**
6	40A						**KG41 T104/GB-P103 KL11V**
Page	**330V**	**420V**	**510V**	**600V**	**690V**	**750V**	**Order code**
7	25A	21A	20A	18A	11A		**KG20B T106/GB-P103 KL11V**
7	27A	27A	25A	23A	15A	12A	**KG32B T106/GB-P103 KL11V**
7	40A	28A					**KG41B T106/GB-P103 KL11V**
Page	**440V**	**560V**	**680V**	**800V**	**920V**	**1000V**	**Order code**
8	25A	21A	20A	18A	11A		**KG20B T108/GB-P103 KL11V**
8	26A	26A	25A	23A	15A	12A	**KG32B T108/GB-P103 KL11V**
8	40A	28A					**KG41B T108/GB-P103 KL11V**

AC SWITCH-DISCONNECTOR SELECTION TABLE

Operational current AC-21A	Insulation voltage Ui	3 POLE Order code	Page	4 POLE Order code	Page
25A	690V	**KG20 T203/GBA270 *KS1V**	10	**KG20 T204/GBA290 *KS1V**	11
25A	690V	**KG20 T203/GBA294 *KL**†	10	**KG20 T204/GBA486 KL51V**†	11
32A	690V	**KG32 T203/GBA294 *KL**†	10	**KG32 T204/GBA486 KL51V**†	11
40A	690V	**KG41 T203/GBA270 *KL1V**	10	**KG41 T204/GBA290 *KL1V**	11

† Larger enclosure to match KG20/32 T104 DC enclosure

UTILISATION CATEGORY

DC-21 is a utilisation category which relates to the switching of resistive loads including moderate overloads.

The designation of utilisation categories is completed by the suffix A or B according to whether the intended applications require frequent or infrequent operations.

Utilisation categories with suffix B are appropriate for devices which, due to design or application, are only intended for infrequent operation. This could apply, for example, to switch-disconnectors normally only operated to provide isolation for maintenance work.

Please select the correct switch-disconnector according to the maximum voltage and current output of all upstream PV modules, this must include all corrective factors according to relevant standards.

Dimensions

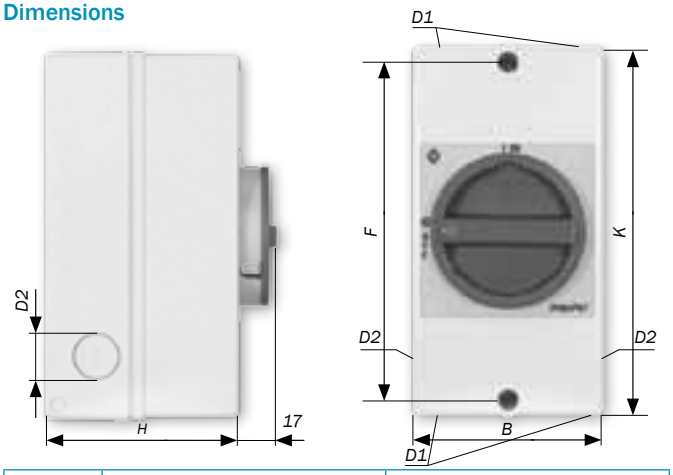

	KG20/KG32	KG41
B	85	100
D1	4 x Ø 20	4 x Ø 25
D2	2 x Ø 20	2 x Ø 25
F	150	178
H	82	93
K	160	190

Mounting

- Insulated enclosure, protection IP66/67, Class II insulation, knock-out entries, black handle and contrasting grey escutcheon plate, OFF-position lockable with padlocks, switch interlocked with lid to prevent opening in 'ON' position, optional Red/Yellow handle available for use as Main/Emergency Off DC Switch-Disconnector.

Connection Guide

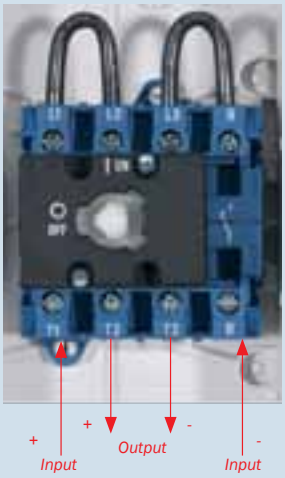

Connecting diagram	Tightening torque for terminal screws		Strip length	
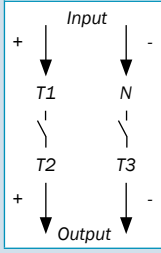	KG20/ KG32	1,25Nm	KG20/ KG32	9
	KG41	1,80Nm	KG41	10

Maximum permissible wire gauge (use copper wire only)

Single core wire or stranded wire	KG20/KG32:6mm²	KG41:16mm²
Flexible wire	KG20/KG32:4mm²	KG41:10mm²

DC Switch-Disconnectors for solar photovoltaic (PV) power supply system acc. to IEC 60364-7-712:2002.

General Data

- Switch-Disconnectors according to EN 60947-3 respectively VDE part 107
- Utilisation Category: DC-21B for Photovoltaic application
- Ambient Temperature: 50°C during 24 hours with peaks up to 55°C
- Terminals: Finger-proof according to VDE 0660-514 and BGV A3, IP 20
- Insulation Voltage: 1000V
- 2 Pole, 4 contacts (2x2 in series)

Rated Value & Order Number

Operational voltage	Operational current	Order number
450V	25A	**KG20 T104/D-P003 KL51V**
450V	40A	**KG41 T104/D-P003 KL11V**
500V	21A	**KG20 T104/D-P003 KL51V**
500V	28A	**KG32 T104/D-P003 KL51V**
650V	20A	**KG20 T104/D-P003 KL51V**
650V	25A	**KG32 T104/D-P003 KL51V**
800V	18A	**KG20 T104/D-P003 KL51V**
800V	23A	**KG32 T104/D-P003 KL51V**
920V	11A	**KG20 T104/D-P003 KL51V**
920V	15A	**KG32 T104/D-P003 KL51V**
1000V	12A	**KG32 T104/D-P003 KL51V**

Data valid only if the pre-assembled jumpers have not been modified.

DC Switch-Disconnectors for solar photovoltaic (PV) power supply system acc. to IEC 60364-7-712:2002.

General Data

- Switch-Disconnectors according to EN 60947-3 respectively VDE 0660 part 107
- Utilisation Category:
  DC-21B for Photovoltaic application
- Ambient Temperature:
  50°C during 24 hours with peaks up to 55°C
- Terminals:
  Finger-proof according to VDE 0660-514 and BGV A3, IP 20
- Insulation Voltage: 1000V
- 2 Pole, 6 contacts (2x3 in series)

Rated Value & Order Number

Operational voltage	Operational current	Order number
500V	40A	**KG41B T106/D-P003 KL11V**
650V	27A	**KG32B T106/D-P003 KL11V**
650V	40A	**KG41B T106/D-P003 KL11V**
800V	21A	**KG20B T106/D-P003 KL11V**
800V	27A	**KG32B T106/D-P003 KL11V**
800V	28A	**KG41B T106/D-P003 KL11V**
1000V	20A	**KG20B T106/D-P003 KL11V**
1000V	25A	**KG32B T106/D-P003 KL11V**

Data valid only if the pre-assembled jumpers have not been modified.

Dimensions

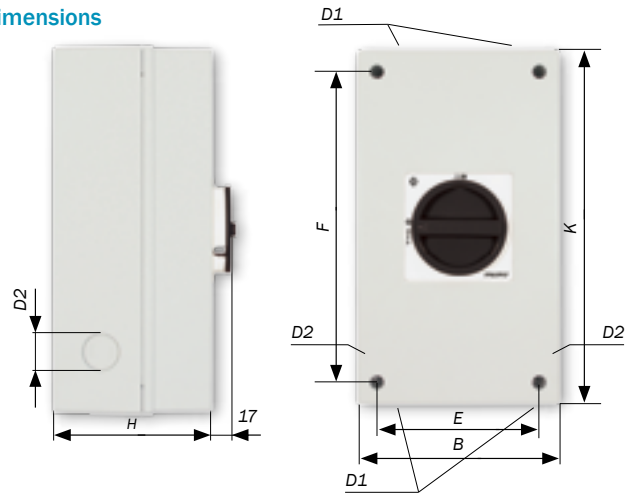

	KG20B/KG32B	KG41B
B	100	145
E	-	124
D1	4 x Ø 25	4 x Ø 25
D2	2 x Ø 25	2 x Ø 25
F	178	229
H	93	107
K	190	250

Mounting

- Insulated enclosure, protection IP66/67, Class II Insulation, knock-out entries, black handle and contrasting grey escutcheon plate, OFF-position lockable with padlocks, switch interlocked with lid to prevent opening in 'ON' position, optional Red/Yellow handle available for use as Main/Emergency Off DC Switch-Disconnector.

Connection Guide

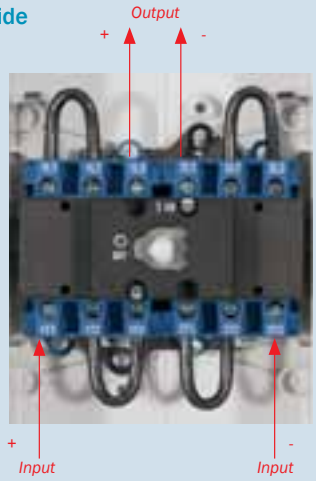

Connecting diagram	Tightening torque for terminal screws		Strip length
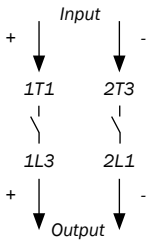	KG20B/ KG32B	1,25Nm	KG20B/ KG32B 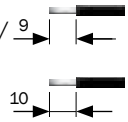
	KG41B	1,80Nm	KG41B

Maximum permissible wire gauge (use copper wire only)

Single core wire or stranded wire KG20B/KG32B:6mm² KG41B:16mm²
Flexible wire KG20B/KG32B:4mm² KG41B:10mm²

Dimensions

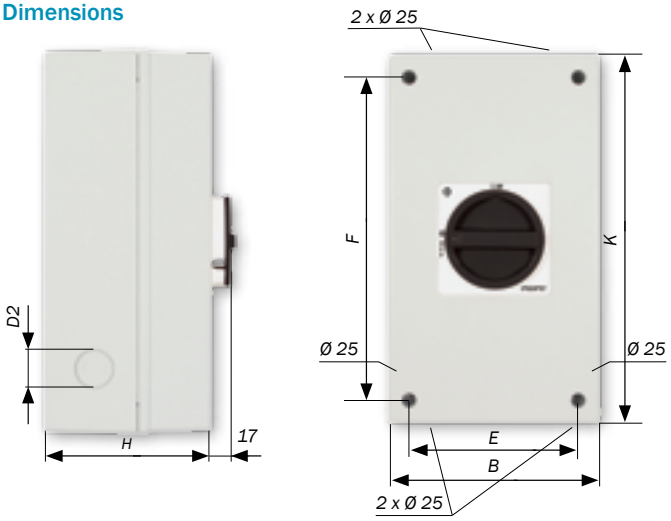

	KG32B/KG41B
B	145
E	124
F	229
H	107
K	250

Mounting

- Insulated enclosure, protection IP66/67, Class II insulation, knock-out entries, black handle and contrasting grey escutcheon plate, OFF-position lockable with padlocks, switch interlocked with lid to prevent opening in 'ON' position, optional Red/Yellow handle available for use as Main/Emergency Off DC Switch-Disconnector.

Connection Guide

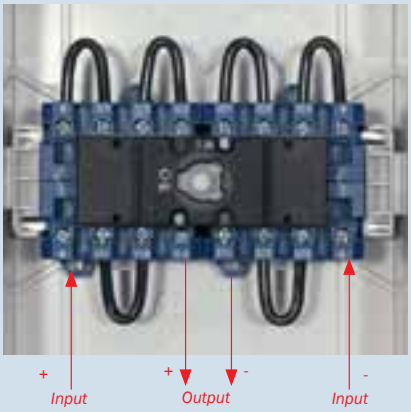

Connecting diagram	Tightening torque for terminal screws		Strip length	
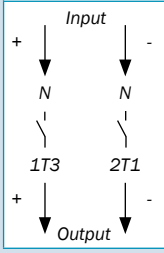	KG32B	1,25Nm	KG32B	9
	KG41B	1,80Nm	KG41B	10

Maximum permissible wire gauge (use copper wire only)

Single core wire or stranded wire	KG32B:6mm²	KG41B:16mm²
Flexible wire	KG32B:4mm²	KG41B:10mm²

DC Switch-Disconnectors for solar photovoltaic (PV) power supply system acc. to IEC 60364-7-712:2002.

General Data

- Switch-Disconnectors according to EN 60947-3 respectively VDE 0660 part 107
- Utilisation Category:
  DC-21B for Photovoltaic application
- Ambient Temperature:
  50°C during 24 hours with peaks up to 55°C
- Terminals:
  Finger-proof according to VDE 0660-514 and BGV A3, IP 20
- Insulation Voltage: 1000V
- 2 Pole, 8 contacts (2x4 in series)

Rated Value & Order Number

Operational voltage	Operational current	Order number
880V	40A	**KG41B T108/D-P003 KL11V**
920V	40A	**KG41B T108/D-P003 KL11V**
1000V	26A	**KG32B T108/D-P003 KL11V**
1000V	35A	**KG41B T108/D-P003 KL11V**

Data valid only if the pre-assembled jumpers have not been modified.

DC Switch-Disconnectors for solar photovoltaic (PV) power supply system acc. to IEC 60364-7-712:2002.

General Data

- Switch-Disconnectors according to EN 60947-3 respectively VDE 0660 part 107
- Utilisation Category:
  DC-21B for Photovoltaic application
- Ambient Temperature:
  50°C during 24 hours with peaks up to 55°C
- Terminals:
  Finger-proof according to VDE 0660-514 and BGV A3, IP 20
- Insulation Voltage: 1000V
- T106 – 2 Pole, 6 contacts (2x3 in series)
- T108 – 2 Pole, 8 contacts (2x4 in series)

Rated Value & Order Number

Operational voltage	Operational current	Order number
450V	60A	**KG80C T106/D-P003 STM**
500V	60A	**KG80C T106/D-P003 STM**
650V	60A	**KG80C T106/D-P003 STM**
800V	60A	**KG80C T108/D-P003 STM**

Data valid only if the pre-assembled jumpers have not been modified.

Dimensions

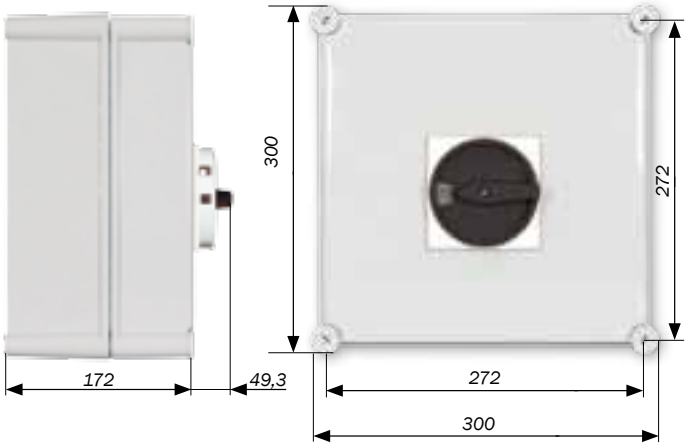

Mounting

- Insulated enclosure, protection IP66/67, Class II Insulation, black handle and contrasting grey escutcheon plate, OFF-position lockable with padlocks, switch interlocked with lid to prevent opening in 'ON' position, optional Red/Yellow handle available for use as Main/Emergency-Off DC Switch-Disconnector.

Connection Guide

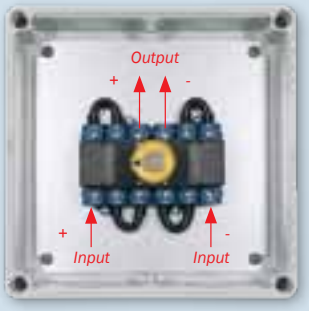

Contact development: 2 pole
6 contact per circuit
(2 x 3 in series)

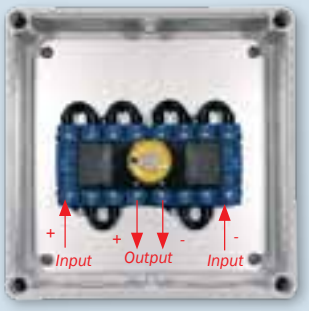

Contact development: 2 pole
8 contact per circuit
(2 x 4 in series)

Connecting diagram 6 contacts	Connecting diagram 8 contacts	Tightening torque for terminal screws	Strip length
Input + ↓ ↓ - 1T1 2T3 1L3 2L1 + ↓ ↓ - Output	Input + ↓ ↓ - N N 1T3 2T1 + ↓ ↓ - Output	KG80C 3,00Nm	KG80C 14

Maximum permissible wire gauge (use copper wire only)

Single core wire or stranded wire	KG80C:50mm²
Flexible wire	KG80C:35mm²

Dimensions

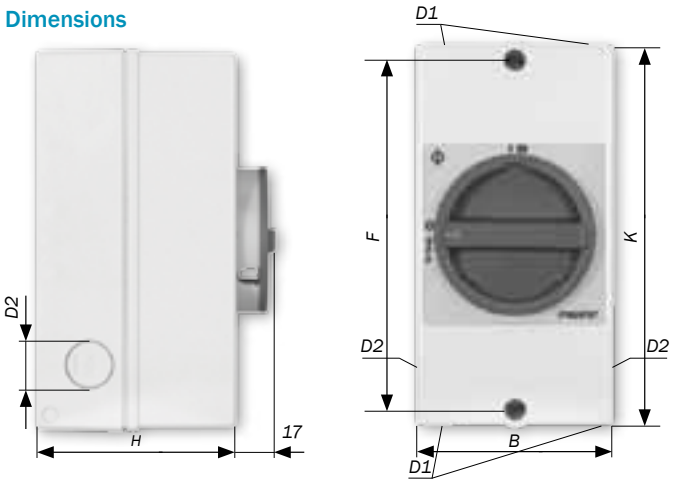

	KG20/KG32	KG41
B	85	100
D1	4 x Ø 20	4 x Ø 25
D2	2 x Ø 20	2 x Ø 25
F	150	178
H	82	93
K	160	190

Connection Guide

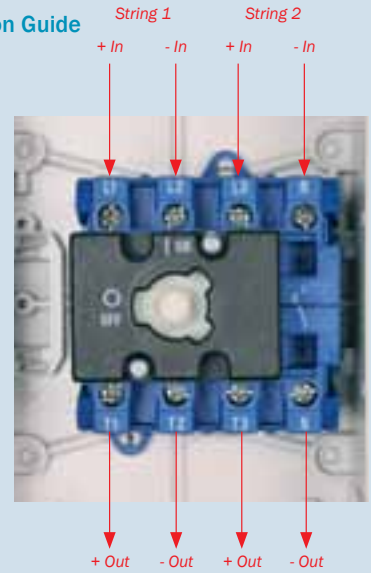

Connecting diagram	Tightening torque for terminal screws	Strip length
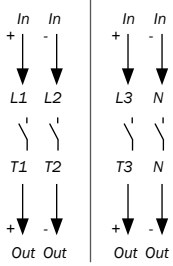	KG20/ KG32 1,25Nm KG41 1,80Nm	KG20/ KG32 9 KG41 10

Maximum permissible wire gauge (use copper wire only)

Single core wire or stranded wire	KG20/KG32:6mm²	KG41:16mm²
Flexible wire	KG20/KG32:4mm²	KG41:10mm²

DC Switch-Disconnectors for solar photovoltaic (PV) power supply system acc. to IEC 60364-7-712:2002.

General Data

- Switch-Disconnectors according to EN 60947-3 respectively VDE 0660 part 107
- Utilisation Category: DC-21B for Photovoltaic application
- Ambient Temperature: 50°C during 24 hours with peaks up to 55°C
- Terminals: Finger-proof according to VDE 0660-514 and BGV A3, IP 20
- 4 Pole, 2x2 contacts per string

Mounting

- Insulated enclosure, protection IP66/67, Class II Insulation, knock-out entries, black handle and contrasting grey escutcheon plate, OFF-position lockable with padlocks, switch interlocked with lid to prevent opening in 'ON' position, optional Red/Yellow handle available for use as Main/Emergency-Off DC Switch-Disconnector.

Rated Value & Order Number

Operational voltage	Operational current	Order number
220V	25A	**KG20 T104/GB-P103 KL51V**
220V	40A	**KG41 T104/GB-P103 KL11V**
280V	21A	**KG20 T104/GB-P103 KL51V**
280V	28A	**KG32 T104/GB-P103 KL51V**
340V	20A	**KG20 T104/GB-P103 KL51V**
340V	25A	**KG32 T104/GB-P103 KL51V**
400V	18A	**KG20 T104/GB-P103 KL51V**
400V	23A	**KG32 T104/GB-P103 KL51V**
460V	11A	**KG20 T104/GB-P103 KL51V**
460V	15A	**KG32 T104/GB-P103 KL51V**
500V	12A	**KG32 T104/GB-P103 KL51V**

Data valid only if the pre-assembled jumpers have not been modified.

DC Switch-Disconnectors for solar photovoltaic (PV) power supply system acc. to IEC 60364-7-712:2002.

General Data

- Switch-Disconnectors according to EN 60947-3 respectively VDE 0660 part 107
- Utilisation Category:
  DC21B for Photovoltaic application
- Ambient Temperature:
  50°C during 24 hours with peaks up to 55°C
- Terminals:
  Finger-proof according to VDE 0660-514 and BGV A3, IP 20
- 4 Pole, 2x3 contacts per string

Mounting

- Insulated enclosure, protection IP66/67, Class II Insulation, knock-out entries, black handle and contrasting grey escutcheon plate, OFF-position lockable with padlocks, switch interlocked with lid to prevent opening in 'ON' position, optional Red/Yellow handle available for use as Main/Emergency-Off DC Switch-Disconnector.

Rated Value & Order Number

Operational voltage	Operational current	Order number
330V	25A	**KG20B T106/GB-P103 KL11V**
330V	40A	**KG41B T106/GB-P103 KL11V**
420V	21A	**KG20B T106/GB-P103 KL11V**
420V	27A	**KG32B T106/GB-P103 KL11V**
420V	28A	**KG41B T106/GB-P103 KL11V**
510V	20A	**KG20B T106/GB-P103 KL11V**
510V	25A	**KG32B T106/GB-P103 KL11V**
600V	18A	**KG20B T106/GB-P103 KL11V**
600V	23A	**KG32B T106/GB-P103 KL11V**
690V	11A	**KG20B T106/GB-P103 KL11V**
690V	15A	**KG32B T106/GB-P103 KL11V**
750V	12A	**KG32B T106/GB-P103 KL11V**

Data valid only if the pre-assembled jumpers have not been modified.

Dimensions

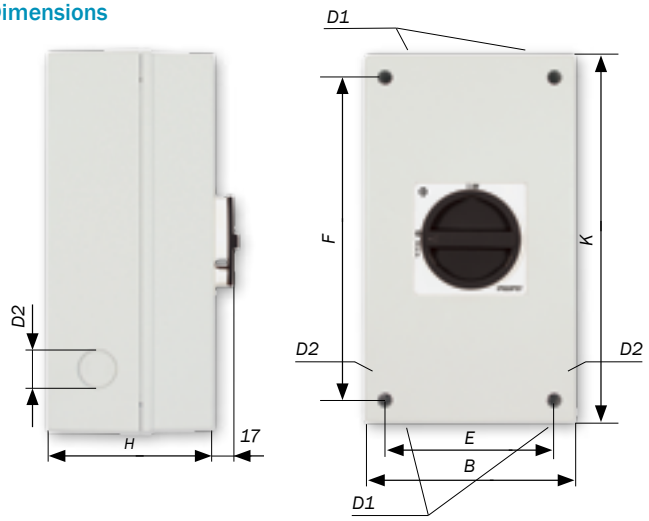

	KG20B/KG32B	KG41B
B	100	145
E	-	124
D1	4 x Ø 25	4 x Ø 25
D2	2 x Ø 25	2 x Ø 25
F	178	229
H	93	107
K	190	250

Connection Guide

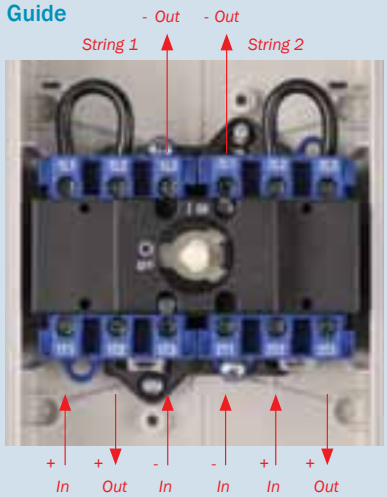

Connecting diagram	Tightening torque for terminal screws	Strip length
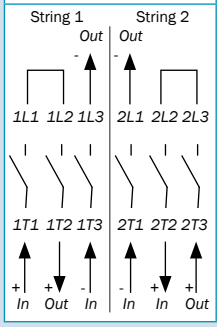	KG20B/ KG32B 1,25Nm KG41B 1,80Nm	KG20B/ KG32B 9 KG41B 10

Maximum permissible wire gauge (use copper wire only)

Single core wire or stranded wire	KG20B/KG32B:6mm²	KG41B:16mm²
Flexible wire	KG20B/KG32B:4mm²	KG41B:10mm²

Dimensions

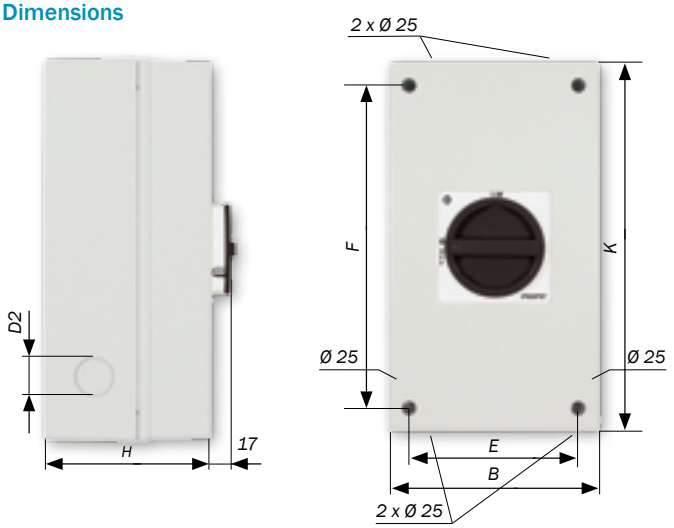

	KG20B/KG32B/KG41B
B	145
E	124
F	229
H	107
K	250

Connection Guide

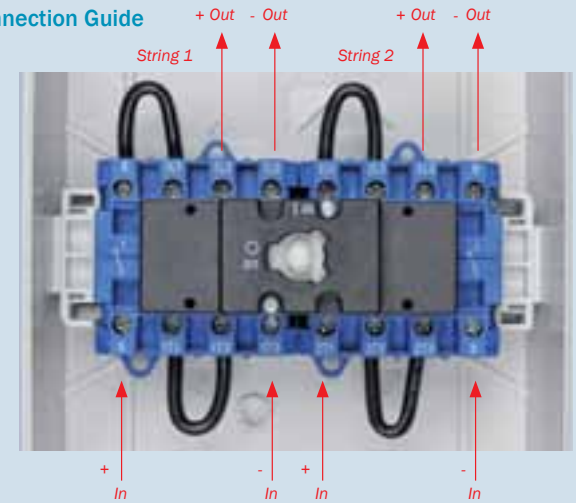

Connecting diagram	Tightening torque for terminal screws	Strip length
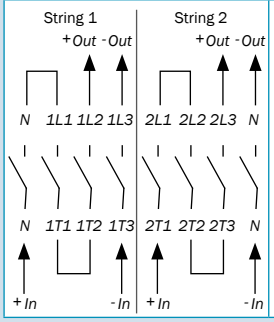	KG20B/ KG32B 1,25Nm KG41B 1,80Nm	KG20B/ KG32B 9 KG41B 10

Maximum permissible wire gauge (use copper wire only)

Single core wire or stranded wire	KG20B/KG32B:6mm²	KG41B:16mm²
Flexible wire	KG20B/KG32B:4mm²	KG41B:10mm²

DC Switch-Disconnectors for solar photovoltaic (PV) power supply system acc. to IEC 60364-7-712:2002.

General Data

- Switch-Disconnectors according to EN 60947-3 respectively VDE 0660 part 107
- Utilisation Category:
  DC-21B for Photovoltaic application
- Ambient Temperature:
  50°C during 24 hours with peaks up to 55°C
- Terminals:
  Finger-proof according to VDE 0660-514 and BGV A3, IP 20
- 4 Pole, 2x4 contacts per string

Mounting

- Insulated enclosure, protection IP66/67, Class II Insulation, knock-out entries, black handle and contrasting grey escutcheon plate, OFF-position lockable with padlocks, switch interlocked with lid to prevent opening in 'ON' position, optional Red/Yellow handle available for use as Main/Emergency-Off DC Switch-Disconnector.

Rated Value & Order Number

Operational voltage	Operational current	Order number
440V	25A	**KG20B T108/GB-P103 KL11V**
440V	40A	**KG41B T108/GB-P103 KL11V**
560V	21A	**KG20B T108/GB-P103 KL11V**
560V	26A	**KG32B T108/GB-P103 KL11V**
560V	28A	**KG41B T108/GB-P103 KL11V**
680V	20A	**KG20B T108/GB-P103 KL11V**
680V	25A	**KG32B T108/GB-P103 KL11V**
800V	18A	**KG20B T108/GB-P103 KL11V**
800V	23A	**KG32B T108/GB-P103 KL11V**
920V	11A	**KG20B T108/GB-P103 KL11V**
920V	15A	**KG32B T108/GB-P103 KL11V**
1000V	12A	**KG32B T108/GB-P103 KL11V**

Data valid only if the pre-assembled jumpers have not been modified.

Main/Emergency - Off AC Switch-Disconnectors for solar photovoltaic (PV) power supply system acc. to IEC 60947.

General Data

- Switch-Disconnectors according to EN 60947-3 respectively VDE 0660 part 107
- Ambient Temperature:
  35°C average during 24 hours with peaks up to 40°C
- Terminals:
  Finger-proof according to VDE 0660-514 and BGV A3, IP 20

Rated Value & Order Number

Operational current AC-21A	Insulation voltage Ui	Enclosed thermal rating I	Order number
25A	690V	25A	**KG20 T203/GBA270 *KS1V**
25A	690V	25A	**KG20 T203/GBA294 *KL†**
32A	690V	32A	**KG32 T203/GBA294 *KL†**
40A	690V	40A	**KG41 T203/GBA270 *KL1V†**

† Larger enclosure to match KG20/32 T104 DC enclosure

Dimensions

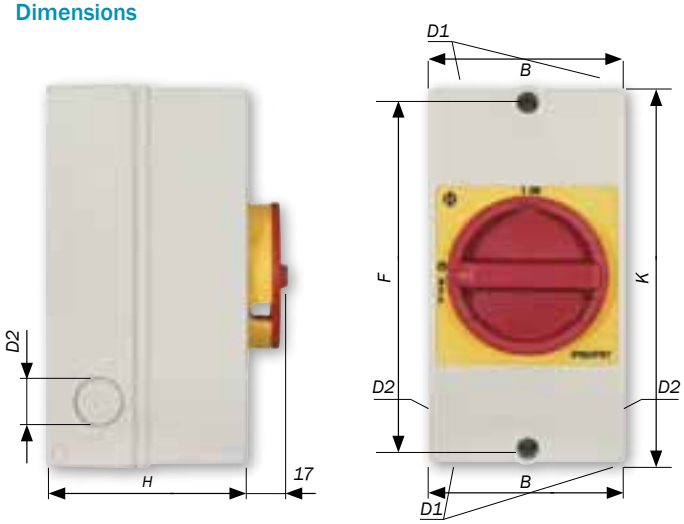

	KG20...KS	KG20/KG32...KL	KG41
B	85	85	100
D1	4 x Ø 20/25	4 x Ø 20	4 x Ø 25
D2	2 x Ø 20	2 x Ø 20	2 x Ø 25
F	110	150	178
H	90	82	93
K	120	160	190

Mounting

- Insulated enclosure, protection IP66/67, insulated, knock-out entries, red handle and contrasting yellow escutcheon plate, OFF-position lockable with padlocks, switch interlocked with lid to prevent opening in 'ON' position. Earth terminal included as standard. Optional Black/Grey handle available for use as Main Switch.

Connecting diagram	Tightening torque for terminal screws		Strip length
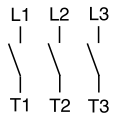	KG20/ KG32	1,25Nm	KG20/ KG32 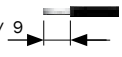
	KG41	1,80Nm	KG41

Maximum permissible wire gauge (use copper wire only)

Single core or stranded wire	KG20/KG32:6mm²	KG41:16mm²
Flexible wire	KG20/KG32:4mm²	KG41:10mm²

Dimensions

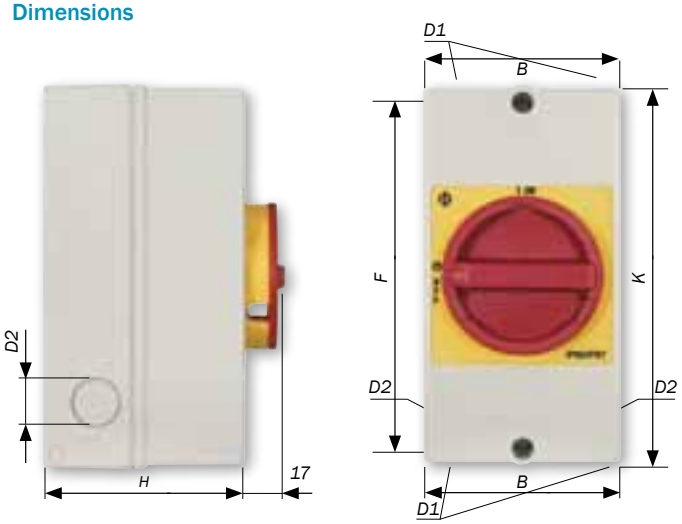

	KG20...KS	KG20/KG32...KL	KG41
B	85	85	100
D1	4 x Ø 20/25	4 x Ø 20	4 x Ø 25
D2	2 x Ø 20	2 x Ø 20	2 x Ø 25
F	110	150	178
H	90	82	93
K	120	160	190

Mounting

- Insulated enclosure, protection IP66/67, insulated, knock-out entries, red handle and contrasting yellow escutcheon plate, OFF-position lockable with padlocks, switch interlocked with lid to prevent opening in 'ON' position. Earth terminal included as standard. Optional Black/Grey handle available for use as Main Switch.

Connecting diagram	Tightening torque for terminal screws		Strip length	
L1 L2 L3 N T1 T2 T3 N	KG20/ KG32	1,25Nm	KG20/ KG32	9
	KG41	1,80Nm	KG41	10

Maximum permissible wire gauge (use copper wire only)

Single core or stranded wire	KG20/KG32:6mm²	KG41:16mm²
Flexible wire	KG20/KG32:4mm²	KG41:10mm²

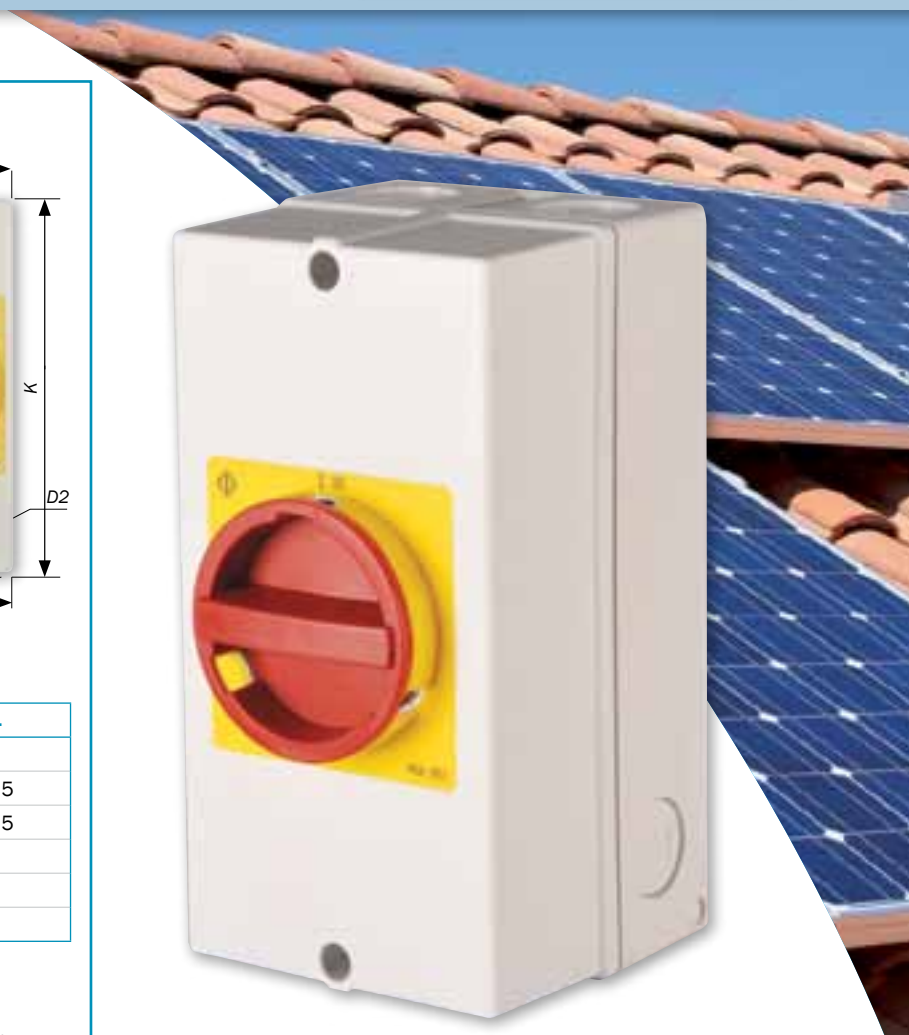

Main/Emergency - Off AC Switch-Disconnectors for solar photovoltaic (PV) power supply system acc. to IEC 60947.

General Data

- Switch-Disconnectors according to EN 60947-3 respectively VDE 0660 part 107
- Ambient Temperature:
  35°C average during 24 hours with peaks up to 40°C
- Terminals:
  Finger-proof according to VDE 0660-514 and BGV A3, IP 20
- 4 Pole (3 phase and switched neutral)

Rated Value & Order Number

Operational current AC-21A, Ie	Insulation voltage Ui	Enclosed thermal rating I	Order number
25A	690V	25A	**KG20 T204/GBA290 *KS1V**
25A	690V	25A	**KG20 T204/GBA486 KL51V** †
32A	690V	32A	**KG32 T204/GBA486 KL51V** †
40A	690V	40A	**KG41 T204/GBA290 *KL1V**

† Larger enclosure to match KG20/32 T104 DC enclosure

Single String

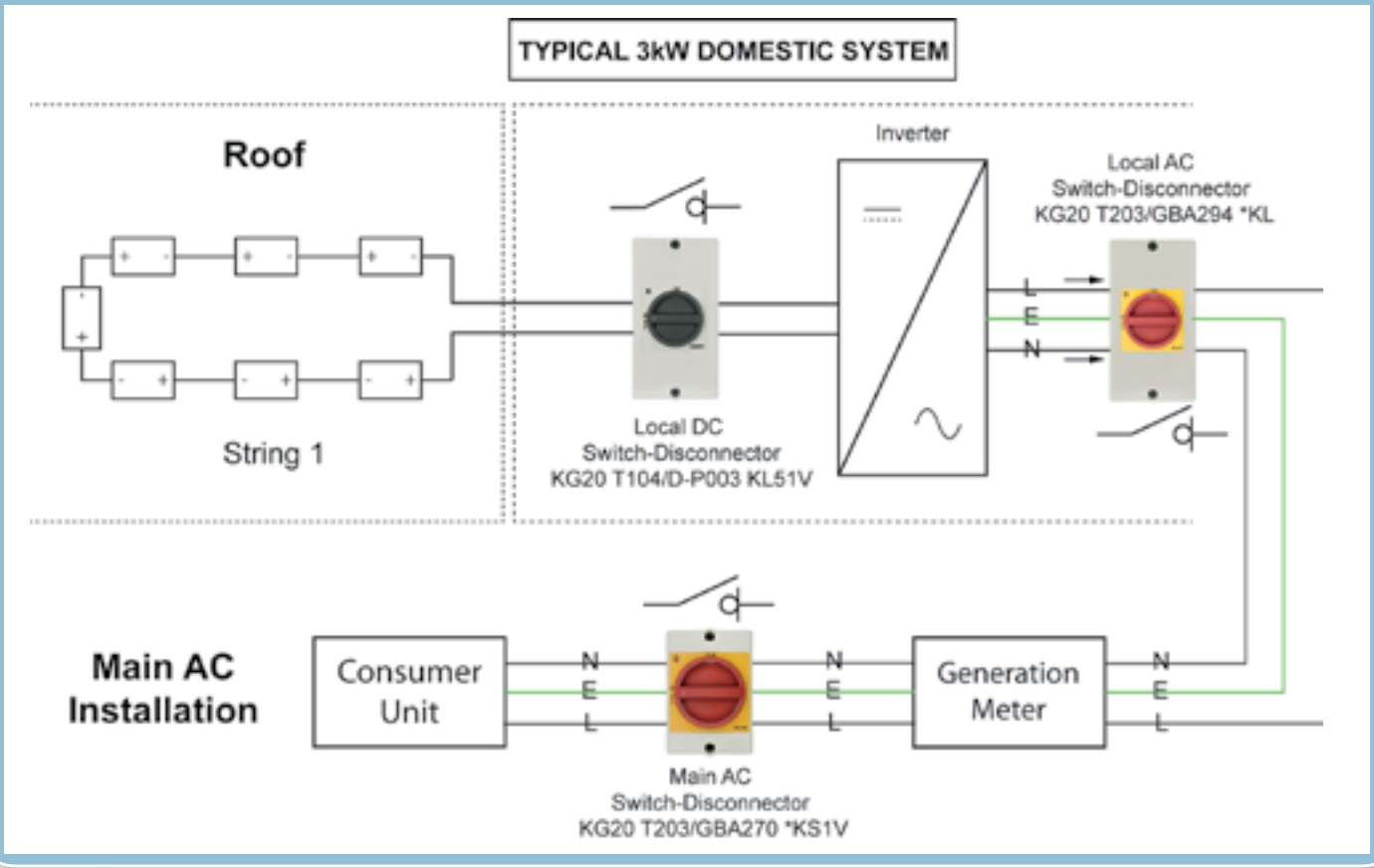

Two String

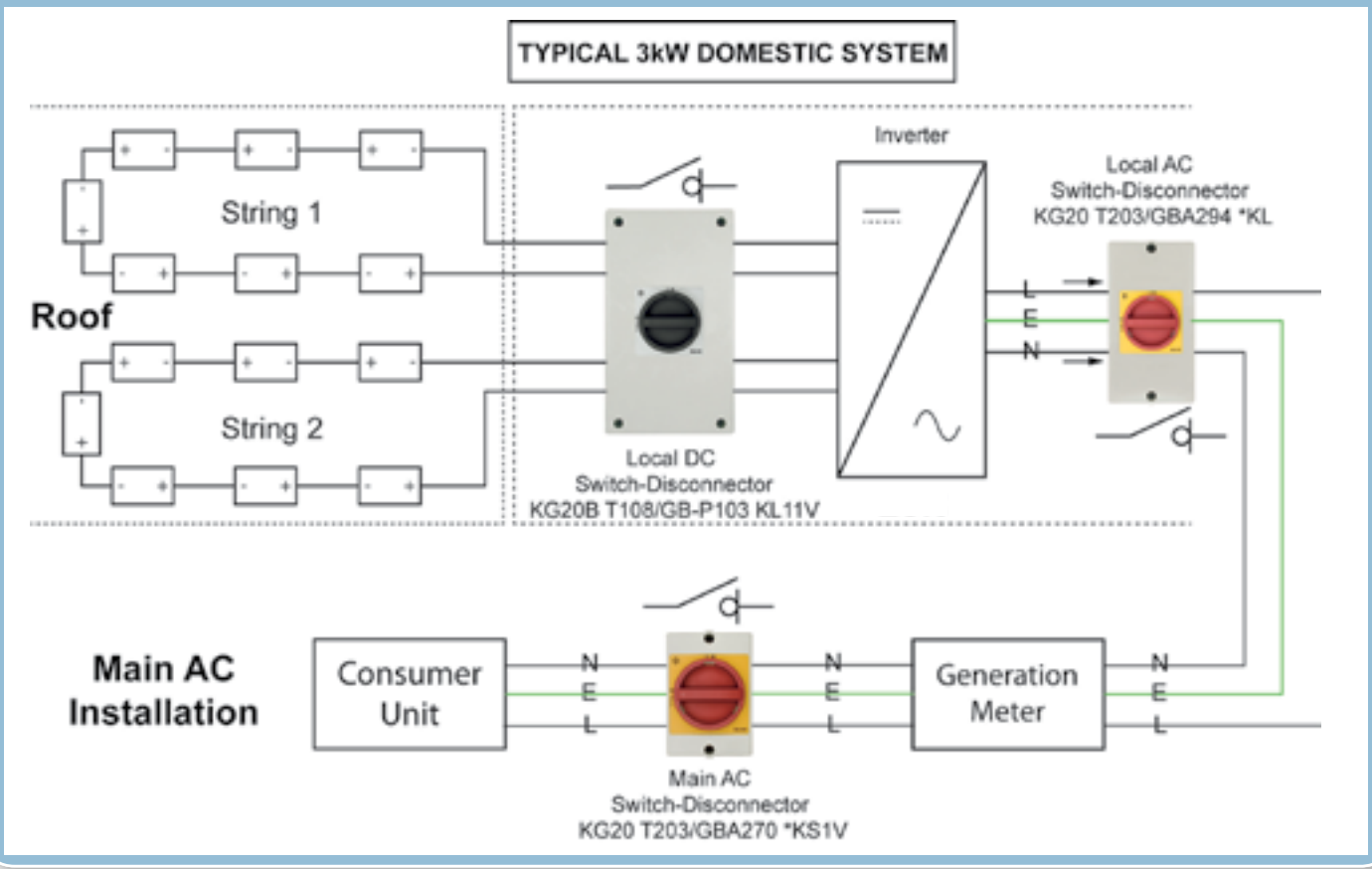

PV Disconnect Switches – Enclosed • DC-21B Rating Information @ 50°C & 60°C.

Ambient Temp	Max Thermal Rating	Rated Operating Voltage & Current								Order code
		440V	450V	500V	560V	680V	800V	920V	1000V	
50°C	25A	25A	25A	21A	21A	20A	18A	11A	-	KG20 T104/D-P003 KL51V
60°C	23A	23A	23A	21A	21A	20A	18A	11A	-	
50°C	28A	28A	28A	28A	28A	25A	23A	15A	12A	KG32 T104/D-P003 KL51V
60°C	23A	23A	23A	23A	23A	23A	23A	15A	12A	
50°C	40A	40A	40A	28A	28A	25A	23A	10A	-	KG41 T104/D-P003 KL11V
60°C	40A	40A	40A	28A	28A	25A	23A	10A	-	

Ambient Temp	Max Thermal Rating	Rated Operating Voltage & Current							Order code
		480V	500V	650V	660V	800V	840V	1000V	
50°C	25A	25A	25A	25A	25A	21A	21A	20A	KG20B T106/D-P003 KL11V
60°C	22A	22A	22A	22A	22A	21A	21A	20A	
50°C	27A	27A	27A	27A	27A	27A	27A	25A	KG32B T106/D-P003 KL11V
60°C	22A	22A	22A	22A	22A	22A	22A	22A	
50°C	40A	40A	40A	40A	40A	28A	28A	25A	KG41B T106/D-P003 KL11V
60°C	40A	40A	40A	40A	40A	28A	28A	25A	
50°C	60A	60A	60A	60A	60A	-	-	-	KG80C T106/D-P003 STM
60°C	60A	60A	60A	60A	60A	-	-	-	

Ambient Temp	Max Thermal Rating	Rated Operating Voltage & Current				Order code
		640V	880V	920V	1000V	
50°C	25A	25A	25A	25A	21A	KG20B T108/D-P003 KL11V
60°C	20A	20A	20A	20A	20A	
50°C	26A	26A	26A	26A	26A	KG32B T108/D-P003 KL11V
60°C	20A	20A	20A	20A	20A	
50°C	40A	40A	40A	40A	35A	KG41B T108/D-P003 KL11V
60°C	35A	35A	35A	35A	35A	
50°C	60A	60A	60A	-	-	KG80C T108/D-P003 STM
60°C	55A	55A	55A	-	-	

Rated insulation voltage: 1000V (all types)

The ratings given in the above tables are in accordance with the requirements of IEC/EN 60947-3, utilisation category DC-21B Ratings in accordance with utilisation category DC-21B are suitable for use in the selection of an isolator switch that is required to isolate a P.V. string input to a P.V. inverter.

Full Rating Data

PV Disconnect Switches for 2 Strings – Enclosed • DC-21B. Rating Information @ 50°C & 60°C

Ambient Temp	Max Thermal Rating	Rated Operating Voltage & Current						Order code
		220V	280V	340V	400V	460V	500V	
50°C	25A	25A	21A	20A	18A	11A	-	KG20 T104/GB-P103 KL51V
60°C	23A	23A	21A	20A	18A	11A	-	
50°C	28A	28A	28A	25A	23A	15A	12A	KG32 T104/GB-P103 KL51V
60°C	23A	23A	23A	23A	23A	15A	12A	
50°C	40A	40A	28A	25A	23A	10A	-	KG41 T104/GB-P103 KL11V
60°C	40A	40A	28A	25A	23A	10A	-	

Ambient Temp	Max Thermal Rating	Rated Operating Voltage & Current						Order code
		330V	420V	510V	600V	690V	750V	
50°C	25A	25A	21A	20A	18A	11A	-	KG20B T106/GB-P103 KL11V
60°C	23A	22A	21A	20A	18A	11A	-	
50°C	27A	27A	27A	25A	23A	15A	12A	KG32B T106/GB-P103 KL11V
60°C	22A	22A	22A	22A	22A	15A	12A	
50°C	40A	40A	28A	25A	23A	10A	-	KG41B T106/GB-P103 KL11V
60°C	40A	40A	28A	25A	23A	10A	-	

Ambient Temp	Max Thermal Rating	Rated Operating Voltage & Current						Order code
		440V	560V	680V	800V	920V	1000V	
50°C	25A	25A	21A	20A	18A	11A	-	KG20B T108/GB-P103 KL11V
60°C	20A	20A	20A	20A	18A	11A	-	
50°C	26A	26A	26A	25A	23A	15A	12A	KG32B T108/GB-P103 KL11V
60°C	20A	20A	20A	20A	20A	15A	12A	
50°C	40A	40A	28A	25A	23A	10A	-	KG41B T108/GB-P103 KL11V
60°C	35A	35A	28A	25A	23A	10A	-	

Rated insulation voltage: 1000V (all types)

The ratings given in the above tables are in accordance with the requirements of IEC/EN 60947-3, utilisation category DC-21B Ratings in accordance with utilisation category DC-21B are suitable for use in the selection of an isolator switch that is required to isolate a P.V. string input to a P.V. inverter.

Kraus & Naimer

Kraus & Naimer's Blue Line products are accepted and universally recognised for their quality and workmanship.

Kraus & Naimer Limited is part of the worldwide Kraus & Naimer Group which celebrated its 100 year anniversary in 2007.

In 1963, Kraus & Naimer Limited was established as the UK sales and marketing company for Kraus & Naimer switchgear. By the early 70's successful growth meant a move to its current purpose-built premises in Newbury, where it supplies over 3,000 customers with world-renowned, high quality Blue Line switchgear products.

A key to our success is the outstanding level of technical product support through our dedicated team of internal and external technical sales engineers. With many years experience, training and unbeatable product knowledge the team can find a suitable solution for most switch applications.

www.krausnaimer.co.uk

e: sales-uk@krausnaimer.com t: 01635 262626

Kraus & Naimer

BLUE LINE switchgear

since 1907

115 London Road
Newbury
Berkshire
RG14 2AH
UK

Website: www.krausnaimer.co.uk

Email: sales-uk@krausnaimer.com

Detailed information relating to application, rating, mounting and correct installation

For free expert advice and technical help call our team

01635 262626