Hi-MO X6 Max Explorer

LR7-54HTH

455~465M

- Suitable for Distribution Market
- Simple design embodies modern style
- Highest efficiency with the best energy generation performance
- Better product warranty, better service

15 15-year Warranty for Materials and Processing

25 25-year Warranty for Extra Linear Power Output

Complete System and Product Certifications

IEC 61215, IEC 61730, UL 61730

ISO9001:2015: ISO Quality Management System

ISO14001: 2015: ISO Environment Management System

ISO45001: 2018: Occupational Health and Safety

IEC62941: Guideline for module design qualification and type approval

LONGi

Hi-MO X6 Max Explorer

LR7-54HTH 455~465M

22.8%	0~3%	<1%	0.40%
MAX MODULE EFFICIENCY	POWER TOLERANCE	FIRST YEAR POWER DEGRADATION	YEAR 2-25 POWER DEGRADATION

Additional Value

25-Year Power Warranty

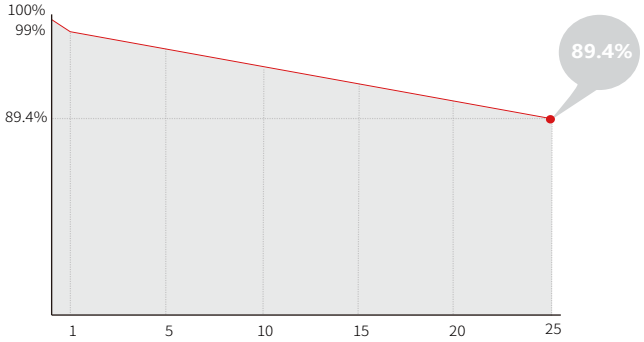

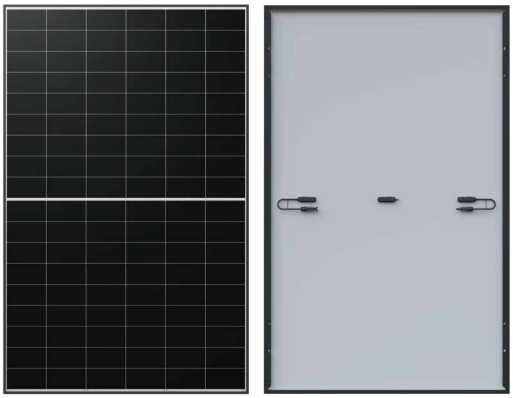

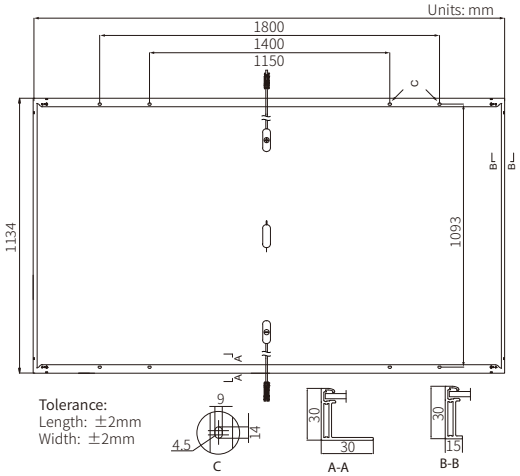

Mechanical Parameters

Cell Orientation	108 (6×18)
Junction Box	IP68
Output Cable	4mm², ±1200mm length can be customized
Glass	Single glass, 3.2mm coated tempered glass
Frame	Anodized aluminum alloy frame
Weight	21.6kg
Dimension	1800×1134×30mm
Packaging	36pcs per pallet / 216pcs per 20' GP / 864pcs per 40' HC

Electrical Characteristics

STC : AM1.5 1000W/m² 25°C NOCT : AM1.5 800W/m² 20°C 1m/s Test uncertainty for Pmax: ±3%

Module Type	LR7-54HTH-455M		LR7-54HTH-460M		LR7-54HTH-465M	
Testing Condition	STC	NOCT	STC	NOCT	STC	NOCT
Maximum Power (Pmax/W)	455	340.0	460	343.7	465	347.4
Open Circuit Voltage (Voc/V)	39.15	36.76	39.35	36.95	39.55	37.13
Short Circuit Current (Isc/A)	14.79	11.95	14.86	12.00	14.93	12.06
Voltage at Maximum Power (Vmp/V)	32.98	30.09	33.19	30.29	33.39	30.47
Current at Maximum Power (Imp/A)	13.80	11.30	13.86	11.35	13.93	11.41
Module Efficiency(%)	22.3		22.5		22.8	

Operating Parameters

Operational Temperature	-40°C ~ +85°C
Power Output Tolerance	0 ~ 3%
Maximum System Voltage	DC1500V (IEC/UL)
Maximum Series Fuse Rating	25A
Nominal Operating Cell Temperature	45±2°C
Protection Class	Class II
Fire Rating	IEC Class C

Mechanical Loading

Front Side Maximum Static Loading	5400Pa
Rear Side Maximum Static Loading	2400Pa
Hailstone Test	25mm Hailstone at the speed of 23m/s

Temperature Ratings (STC)

Temperature Coefficient of Isc	+0.050%/°C
Temperature Coefficient of Voc	-0.230%/°C
Temperature Coefficient of Pmax	-0.280%/°C

LONGi

Specifications included in this datasheet are subject to change without notice. LONGi reserves the right of final interpretation. (20240511 V2) DG