Connecting Strength

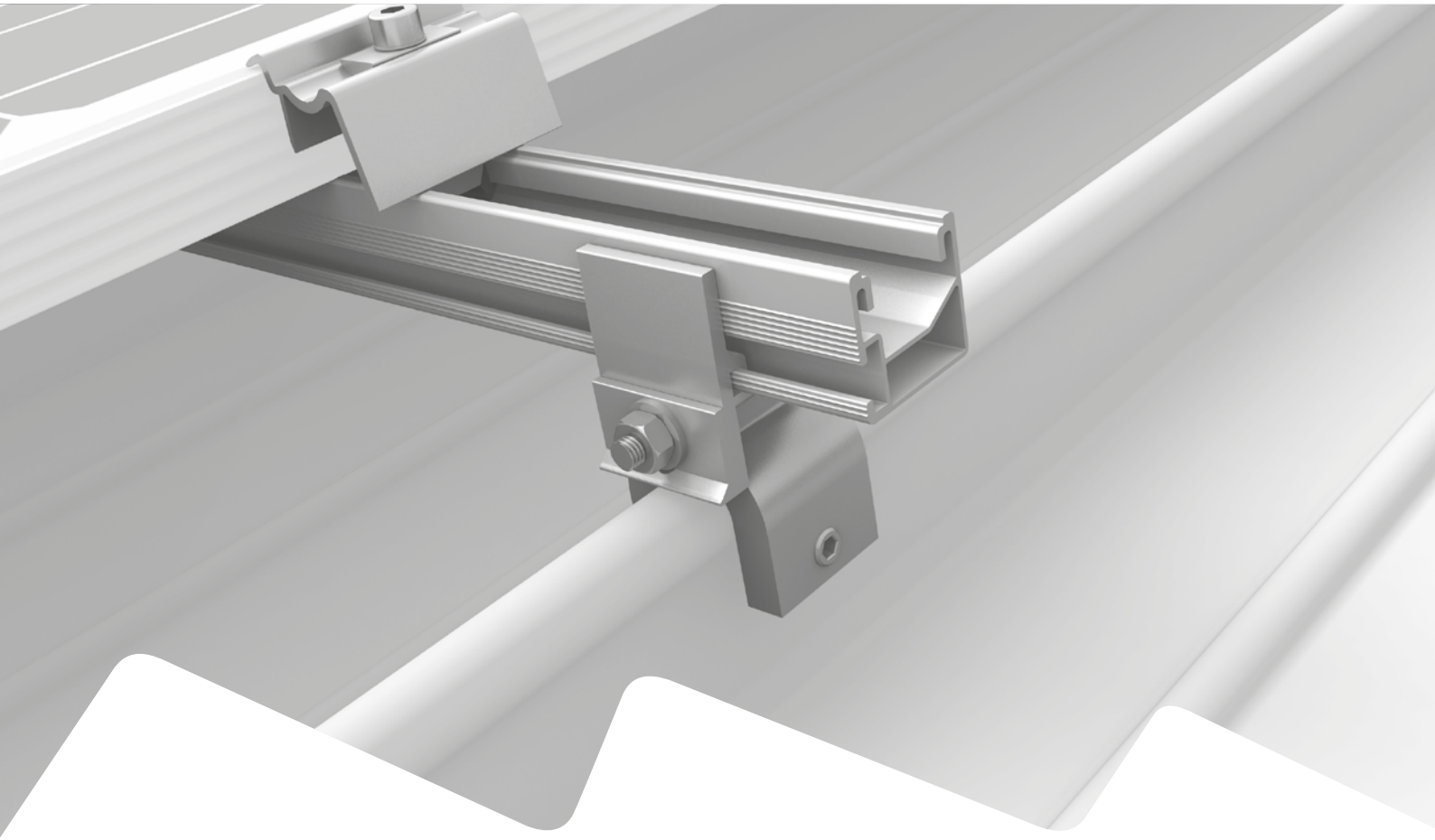

Assembly instructions

Standing seam clamps and clamps for metal roof systems

with SingleRail or SolidRail

Content

- **Tools overview** 3
- **General safety information** 4
- **The following guidelines apply** 5
  - Planning with K2 Base 5
  - Roof requirements 5
  - Static requirements 5
  - Important mounting instructions 5
- **Components** 6
- **Clamps: sheet metal seam and metal roofing systems** 8
  - Compatible with SingleRail 8
  - Compatible with SolidRail 9
  - Installation instructions for SingleRail 11
- **Assembly** 12
  - Basic assembly 12
  - Portrait: 1 layer 15
  - Landscape: 2 layers, clamping position long side 16
  - Landscape: 1 layer, clamping position short side 17
  - Thermal separations 18
- **Optional** 19
  - BlackCover 19
  - EndCap 19

Quality tested - several certifications

K2 Systems stands for secure connections, highest quality and precision. Our customers and business partners have known that for a long time. Independent institutes have tested, confirmed and certified our capabilities and components.

Please find our quality and product certificates under:
k2-systems.com

Tools overview

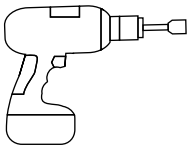



5 mm 6 mm 13 mm 15 mm



6 - 32 Nm
(4.5 - 22.2 lb-ft)



5 mm 6 mm 13 mm 15 mm

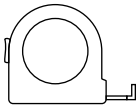

≥ 3.0 m



≥ 6.0 m

Digital Toolbox

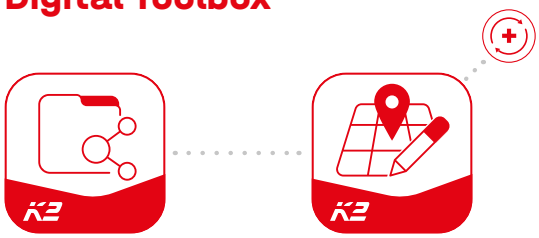

Do you already know our digital services? Use our K2 DocuApp now and record the first important data directly at the customer or project site.

Simply transfer the data to our online planning software K2 Base. Here you can plan your project easily, safely and quickly. You receive a detailed project report with assembly plan and static report.
The K2+ interface enables seamless project data transfer to the planning tools of well-known inverter manufacturers or yield planning tools.

Get started and register now:

docuapp.k2-systems.com

base.k2-systems.com

General safety information

Please note that our general mounting instructions must be followed at all times and can be viewed online at k2-systems.com

- The equipment may only be installed and operated by qualified and adequately trained installers.
- Prior to installation, ensure that the product complies with on-site static loading requirements. For roof-mounted systems, the roof load-bearing capacity must always be checked.
- National and local building regulations and environmental requirements must be adhered to.
- Compliance with health and safety regulations, accident prevention guidelines and applicable standards is required.
  - Protective equipment such as safety helmet, boots and gloves must be worn.
  - Roofing works must be in accordance with roofing regulations utilising fall protection safeguards when eaves height exceeds 3 m.
  - At least two people must be present for the duration of the installation work in order to provide rapid assistance in the event of an emergency.
- K2 mounting systems are continuously developed and improved and the installation process may thereby change at any time. Prior to installation consult our website at www.k2-systems.com/en/technical-information for up-to-date instructions. We can send you the latest version on request.
- The assembly instructions of the module manufacturer must be adhered to.
- Equipotential bonding/grounding/earthing between individual parts is to be performed according to country specific standards, as well as national laws and regulations.
- At least one copy of the assembly instructions should be available on site throughout the duration of the installation.
- Failure to adhere to our general safety and assembly instructions and not using all system components, K2 is not liable for any resulting defects or damages. We do not accept liability for any damage resulting in the use of competitor's parts. Warranty is excluded in such cases.
- K2 Systems GmbH reserves the right to exclude liability in case of disregard of our General Safety Instructions as well as in case of installation or mounting of components of a competitor.
- If all safety instructions are adhered to and the system is correctly installed, there is a product warranty entitlement of 12 years! We strongly recommend reviewing our terms of guarantee, which can be viewed at k2-systems.com/en/warranty-terms-and-conditions We will also send this information on request.
- Dismantling of the system is performed in reverse order to the assembly.
- K2 stainless steel components are available in different corrosion resistance classes. Each structure or component must be carefully checked for possible corrosion exposure.

The following guidelines apply

This System can be used without further testing by K2 systems in the following standard conditions. It is also suitable for higher requirements. However, if a value exceeds the standard conditions, please contact K2 Systems.

Planning with K2 Base

We recommend our free online software K2 Base for the planning. In five steps, you can plan the right assembly system and get an installation recommendation, a bill of materials and the structural analysis report. Simply register and start planning: base.k2-systems.com

Roof requirements

- Adequate roof cover holding force on the support structure or substructure.
- Roof incline: 5 - 75°

Static requirements

It is important to ensure that the roof cover and support structure can absorb the forces transmitted from the clamp to the seam.

Important mounting instructions

- The seam clamps/system roof clamps may impede thermally induced changes in sheet metal length under certain circumstances. A distance between the clamps and the cleats/ holding clips of the roof covering must be taken into account, in order to ensure the thermal expansion of the roof cover is unimpeded:
  - **Folded standing seam**
    ≥ 50 mm
  - **Round seam and metal roof systems**
    ≥ 175 mm (or a value specified by the roofing manufacturer)
- The installation company must initially check that the standing seam clamps are suitable for the intended purpose.
- If the roofing material is made of copper, standing seam clamps made of aluminium must only be used in combination with a stainless steel inlay in order to prevent electrochemical corrosion.
- Pre-position the standing seam clamps and slightly tighten the grub screw. Only tighten the standing seam clamps with the specified tightening torque after mounting the rails.
- For all clamp fixtures it is important to ensure that the first rail position is installed so that it runs transversely to the seam and, where applicable, with cross bracing.
- The SingleRail 36/50 RailConnector must always be positioned between two seam clamps; meaning, a cantilever extension at the rail edge outside the last seam clamp is not permitted.
- After a maximum of 6.6 m, the components must be thermally separated. For titanium zinc/aluminum sheets already after a maximum of 3.3 m!
- The general standards and regulations for lightning protection must be observed on site and, where appropriate, a specialist must be consulted in order to draw up a lightning protection concept (use a lightning protection clamp if necessary). Country-specific regulations must be observed.
- The tightening torque of all module clamps is 16 Nm.
- A minimum mounting distance of 50 mm from the end of the rail / rail joint to the module frame.
- Rail cut SingleRail/SolidRail ≥ 700 mm
- Observe the manufacturer's specifications for the clamping range of the module clamps and for mounting the modules (see the manufacturer's module data sheet)
- The mounting components are not climbing aids!
- The system must be checked by a specialist company after exceptional events, such as storms, heavy rain, earthquakes etc. If deformed or loose components or other damage is determined when checking the system, these must be replaced with new components.

Components

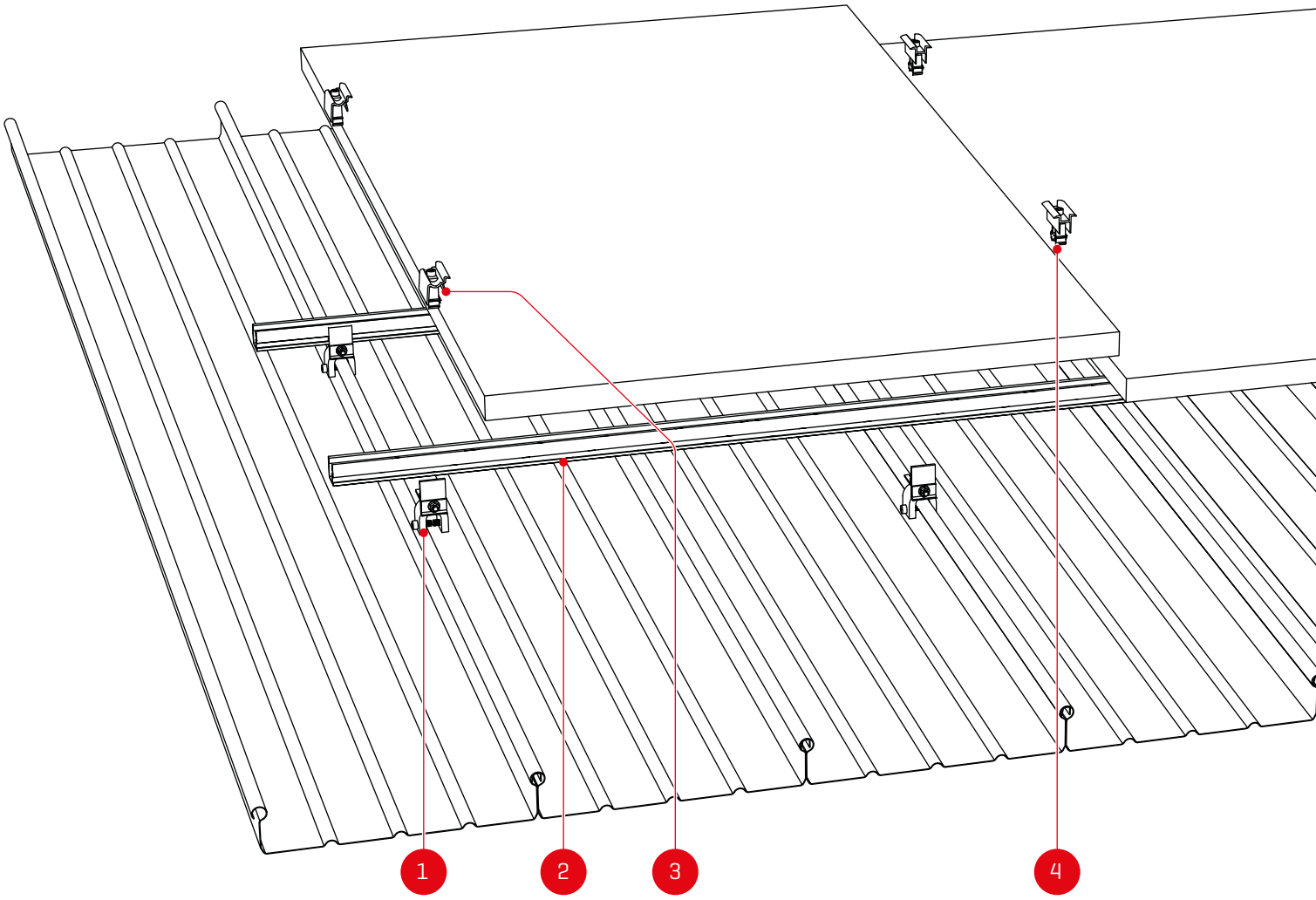

1 Item number system-specific
Standing seam clamps, see pag 8/9/10!

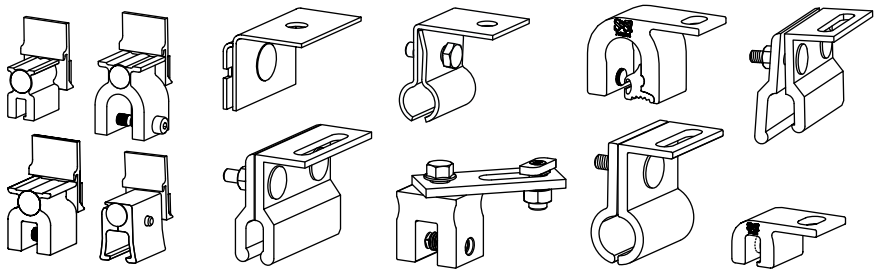

Item number system-specific
SolidRail connection:
T-bolt and locking nut



2 Item number system-specific
SingleRail or SolidRail

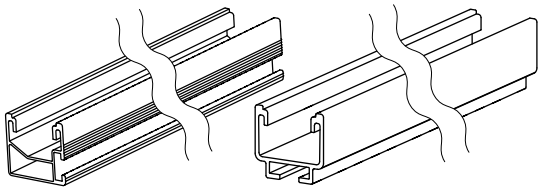

Matching rail connectors
2003605/2001976
SingleRail 36/50 RailConnector /
SingleRail 36/50 Connector Set

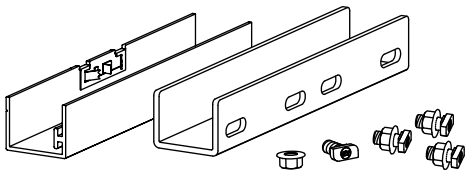

Item number system-specific
Kit connecteur de rail
SolidRail

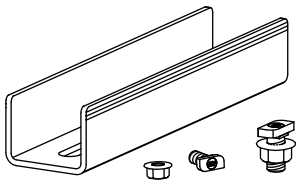

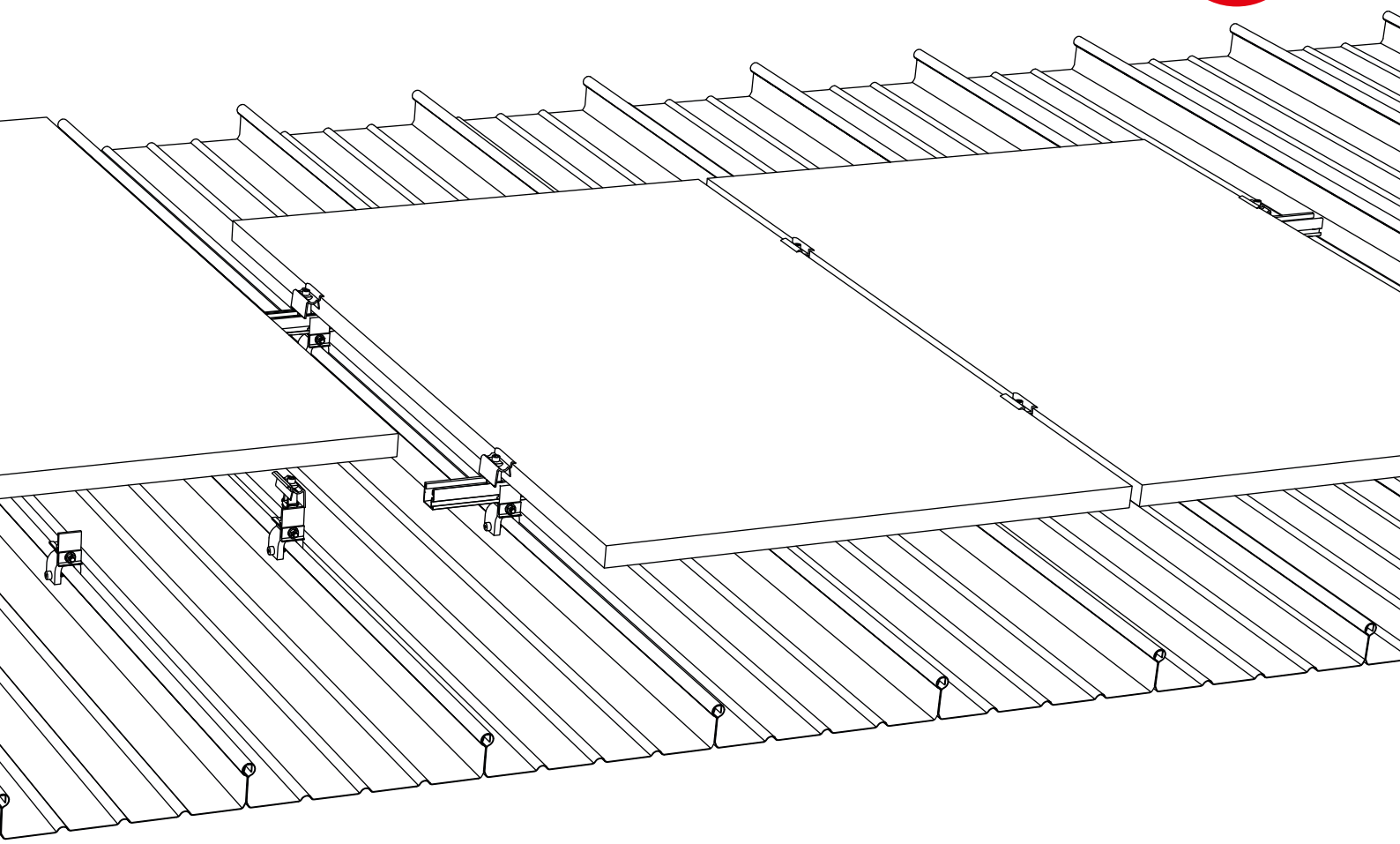

Optional

3 Item number system-specific
Module end clamps

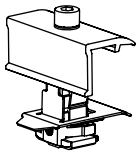

K2 Clamp EC
25 - 40



XS Clamp EC
30 / 33 / 35

2003145
Climber 36/50 set

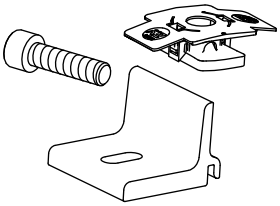

2002544
Adapter plate SolidRail

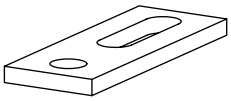

2001640
Stainless steel inlay for copper roofs

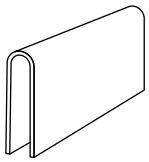

4 Item number system-specific
Module middle clamps

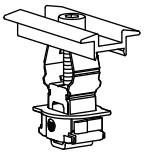

K2 Clamp MC
25 - 40



XS Clamp MC
30 / 33-35

1004767/2004911
EndCap SingleRail 36/50



2003523/2002907
BlackCover SingleRail 36/50

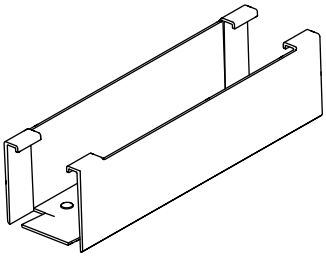

Clamps: sheet metal seam and metal roofing systems

Compatible with SingleRail

Standing Seam Clamp CF:x SingleRail 2003024

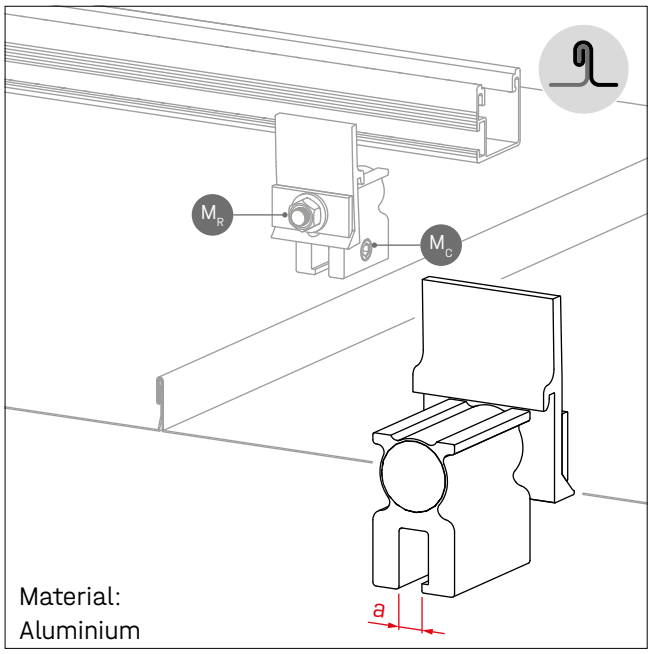

Seam type	Double standing seam
Sheet thickness	0.4 - 1.0 mm

M_C = 18 Nm; excl. galvanised steel panel > 0.7 mm = 18 - 20 Nm
M_R = 15 Nm · a = 7.0 mm

Snap Seam Clamp CF:x SingleRail 2003083

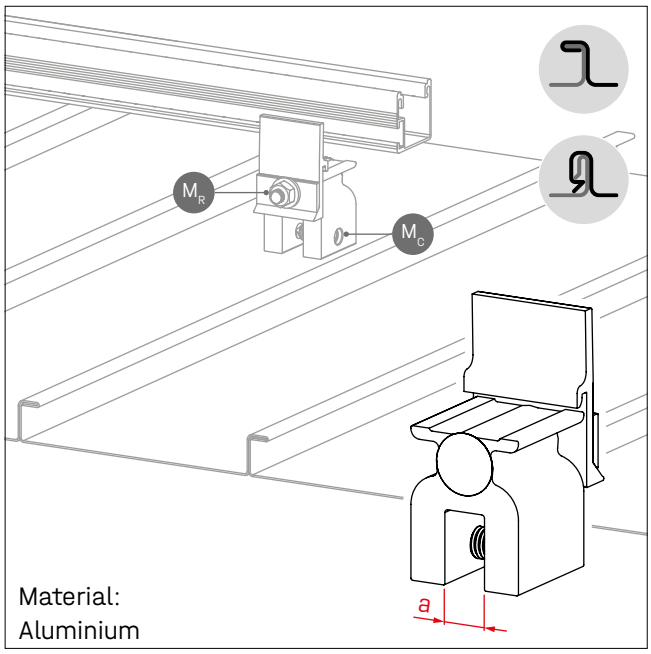

Seam type	Angeled and snaplock standing seam
Sheet thickness	0.4 - 1.0 mm (Steel panel ≤ 0.7 mm)

M_C = 18 Nm; excl. galvanised steel panel > 0.7 mm = 18 - 20 Nm
M_R = 15 Nm · a = 14.0 mm

Round Seam Clamp CF:x SingleRail 2002859

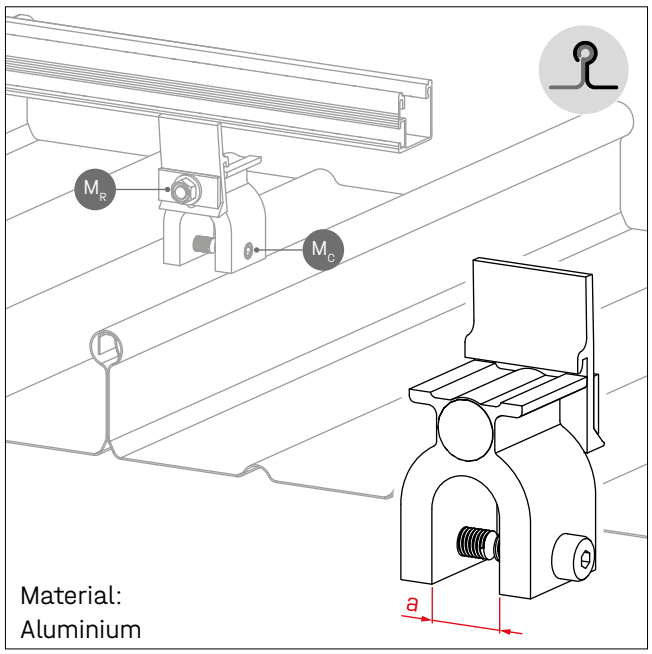

Seam type	Round standing seam (e.g. Bemo, Kalzip, Aluform, Rib-Roof Evolution)
Sheet thickness	0.6 - 1.2 mm

M_C = 18 Nm · M_R = 15 Nm · a = 25.0 mm

SeamClamp CF:x SingleRail 2005182

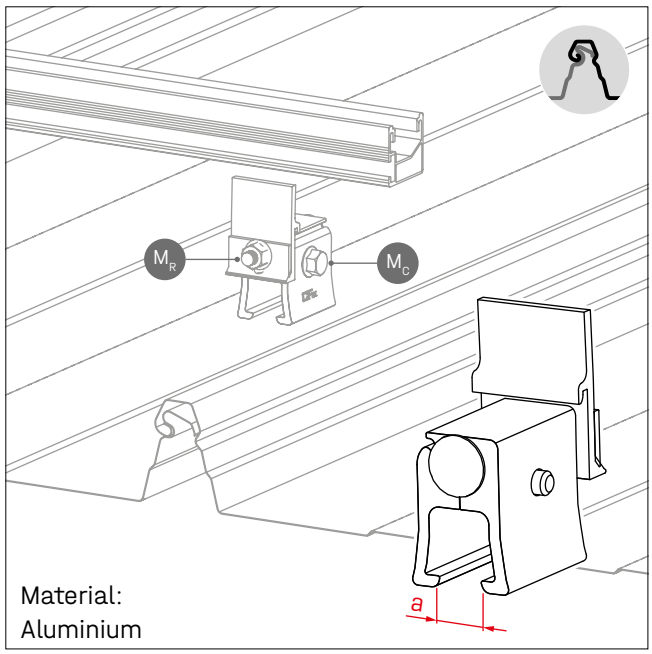

Seam type	Domitec, Lysaght Klip-Lok 406, Safintra Saflok 410, Safintra Saflok 700
Sheet thickness	0.75 - 1.0 mm

M_C = 20 Nm · M_R = 15 Nm · a = 15.0 mm

Compatible with SolidRail

Double standing seam clamp SolidRail 2001712

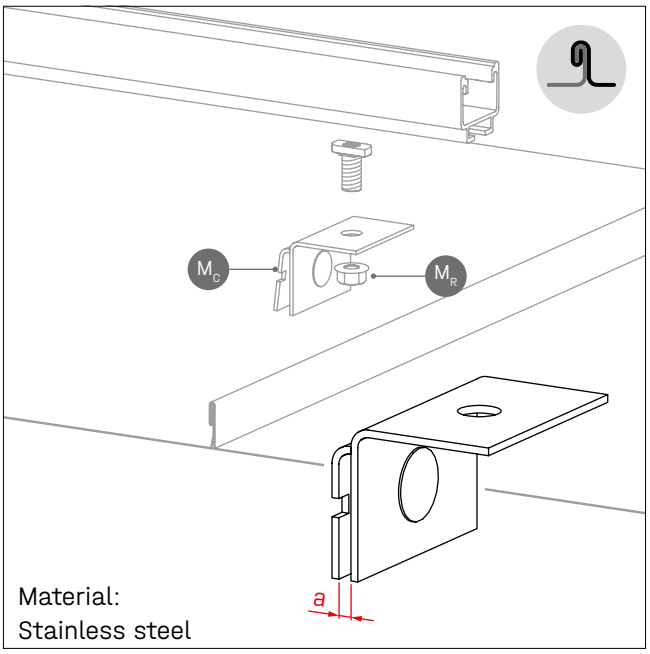

Seam type	Standing seam (min. 25 mm height)
Sheet thickness	0.7 mm
Clamping range	3.5 mm

M_C = 20 Nm · M_R = 32 Nm · a = 3.5 mm

Snap Seam Clamp CF:x SolidRail 2003082

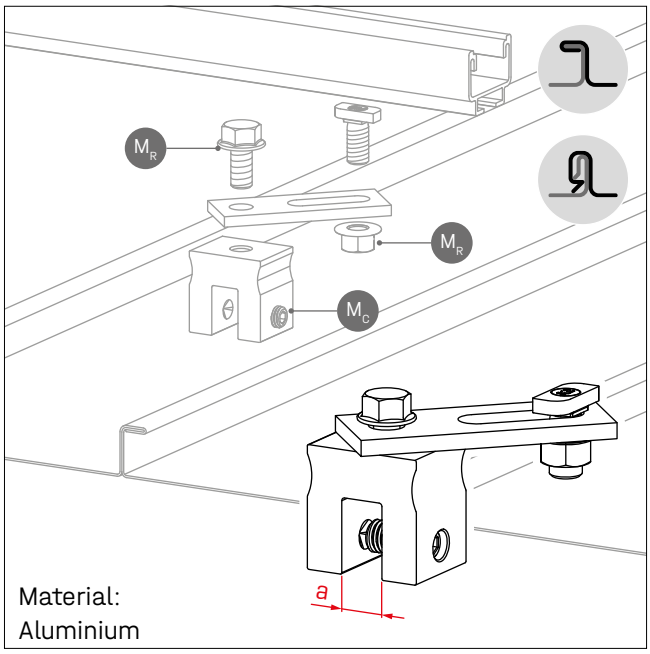

Seam type	Angeled and snaplock standing seam
Sheet thickness	0.4 - 1.0 mm (Steel panel ≤ 0.7 mm)

M_C = 18 Nm; excl. alvanised steel panel > 0.7 mm = 18 - 20 Nm)
M_R = 32 Nm · a = 14.0 mm

Round SeamClamp; SolidRail 2001853

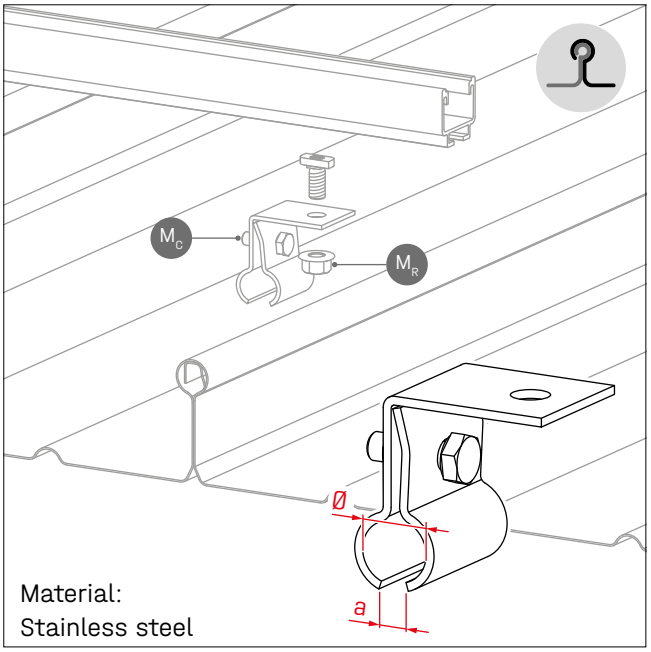

Seam type	Round standing seam
Sheet thickness	≥ 0.7 mm

M_C = 20 Nm · M_R = 32 Nm · a = 10.5 mm · Ø 19.0 mm

Round Seam Clamp S-5! SolidRail 1000888

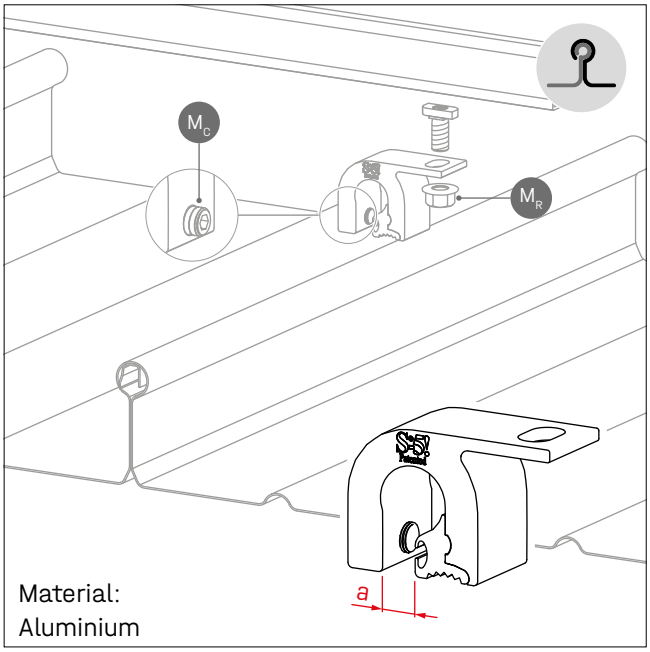

Seam type	Round standing seam
Sheet thickness	0.6 - 1.2 mm; Ø seam profile ≤ 23 mm

M_C = 15 - 17 Nm; excl. galvanised steel panel > 0.7 mm = 18 - 20 Nm
M_R = 32 Nm · a = 11.5 mm

Compatible with SolidRail

Standing SeamClamp S-5! SolidRail 1001052

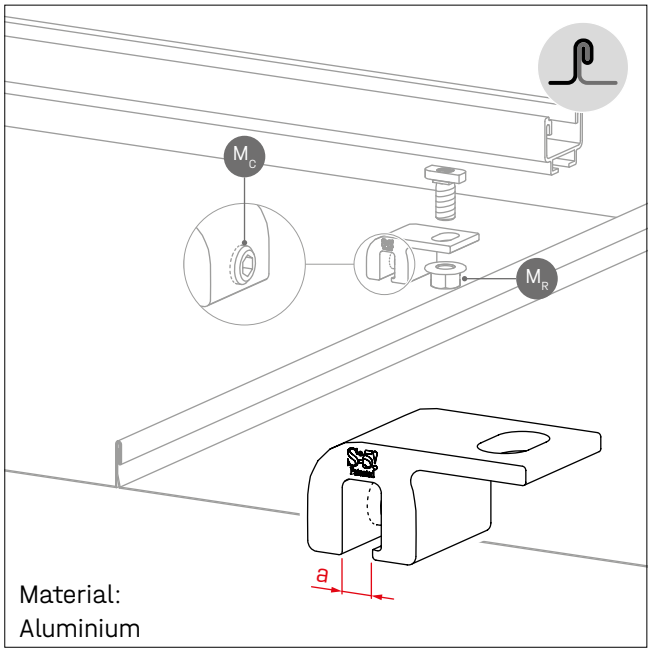

Seam type	Double standing seam
Sheet thickness	0.4 - 1.0 mm

M_C = 15 - 17 Nm; excl. galvanised steel panel > 0.7 mm = 18 - 20 Nm
M_R = 32 Nm · a = 7.0 mm

Metal roof system clamp Zambelli RibRoof465 2002118

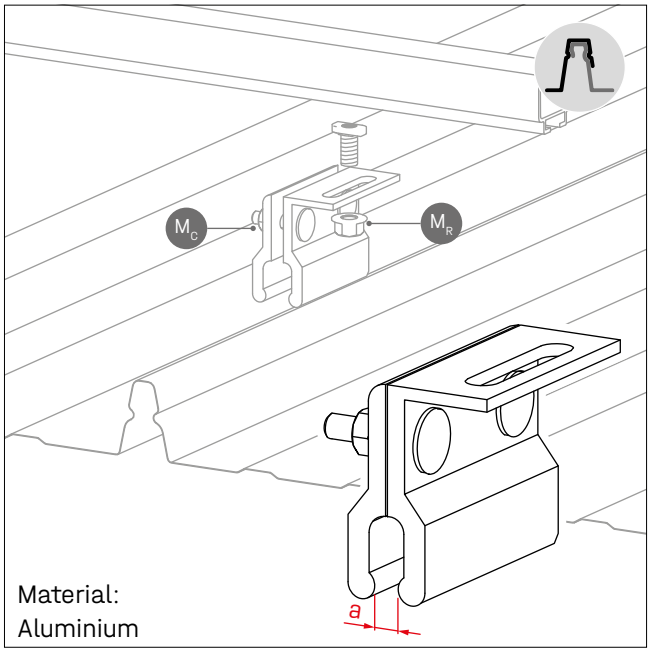

Seam type	Rib-Roof 465

M_C = 20 Nm · M_R = 32 Nm · a = 12.0 mm

Always mount on the overlap rib! A minimum distance of 50 mm plus length expansion (approx. 100 - 200 mm) to the retaining brackets must be maintained to ensure the length expansion of the profiled sheets.

Metal roof system clamp RibRoofSpeed500 2002225

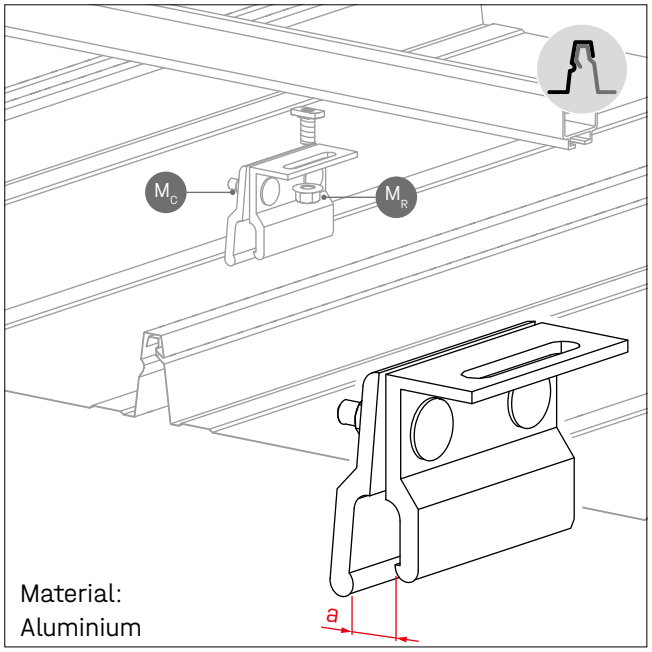

Seam type	Rib-Roof Speed 500 *

M_C = 20 Nm · M_R = 32 Nm · a = 17.0 mm

Metal roof system clamp RibRoofEvolution 2002226

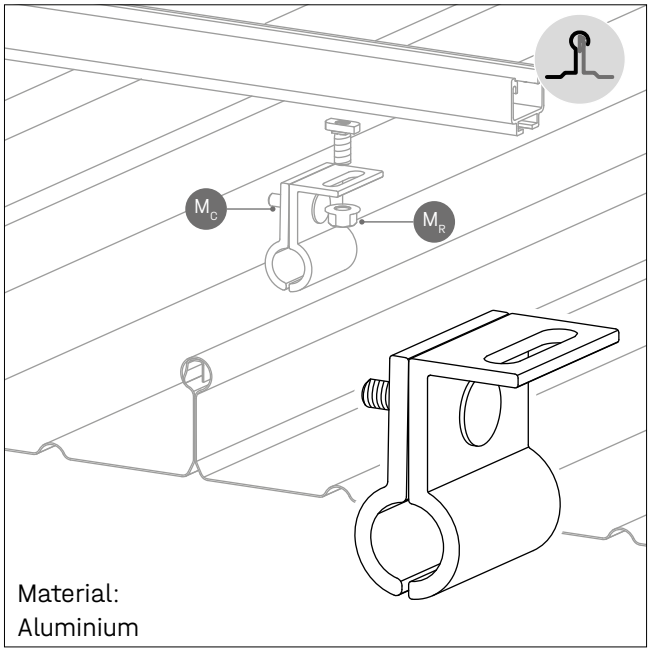

Seam type	Rib-Roof Evolution

M_C = 20 Nm · M_R = 32 Nm · Ø 23.0 mm

* From delivery year 2005; older roofs on request

Installation instructions for SingleRail

A

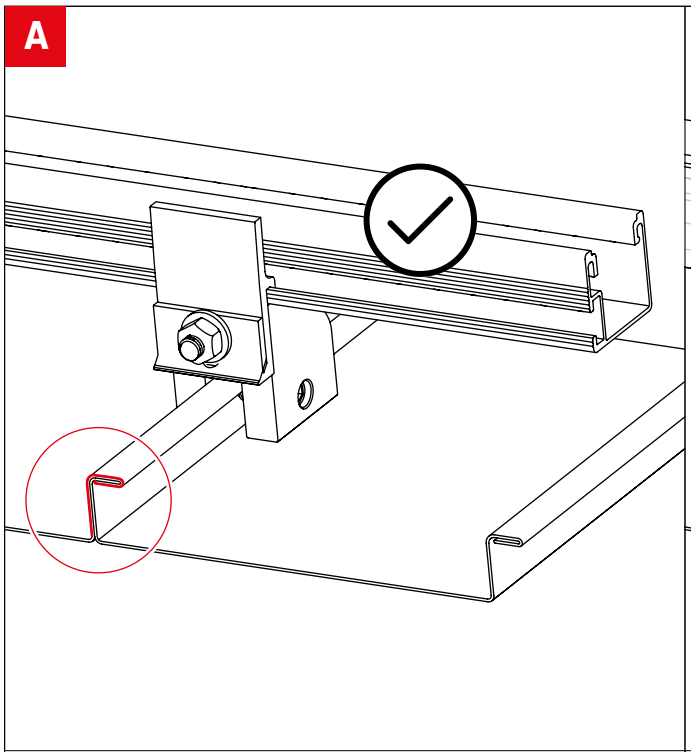

! Climber conversion required – Step B

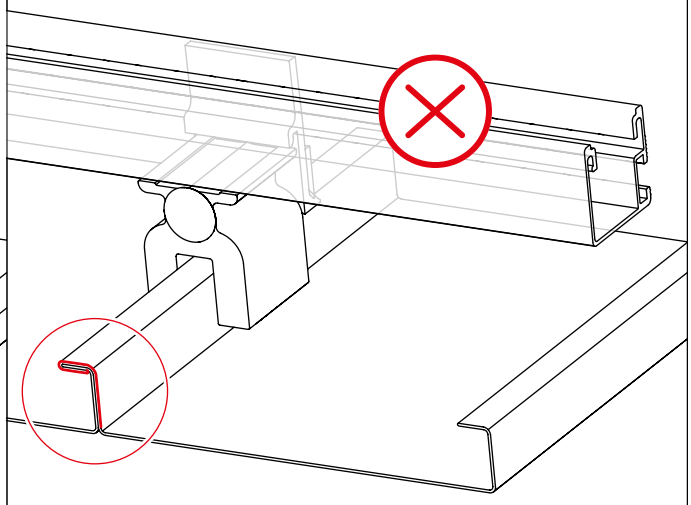

Seam type	Product number
Standing Seam Clamp CF:x SingleRail	2003024
Snap Seam Clamp CF:x SingleRail	2003083

B

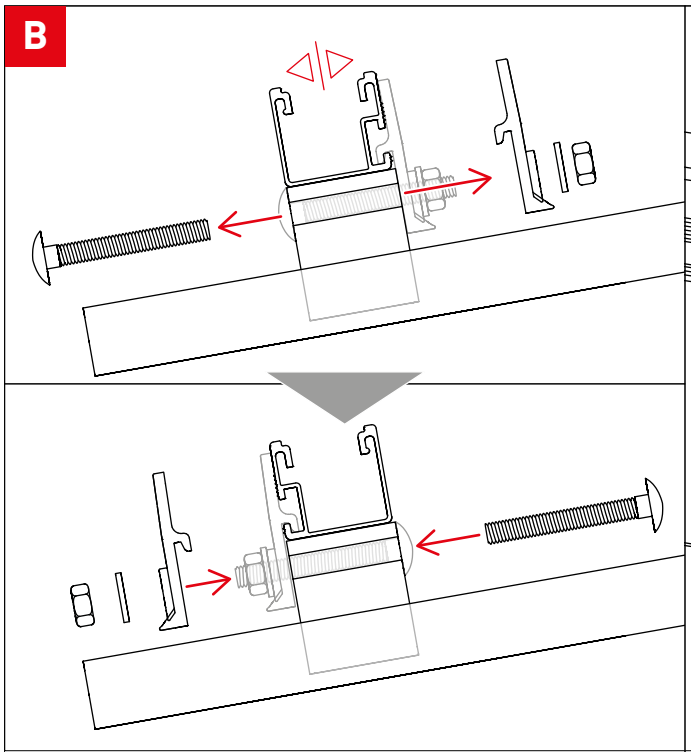

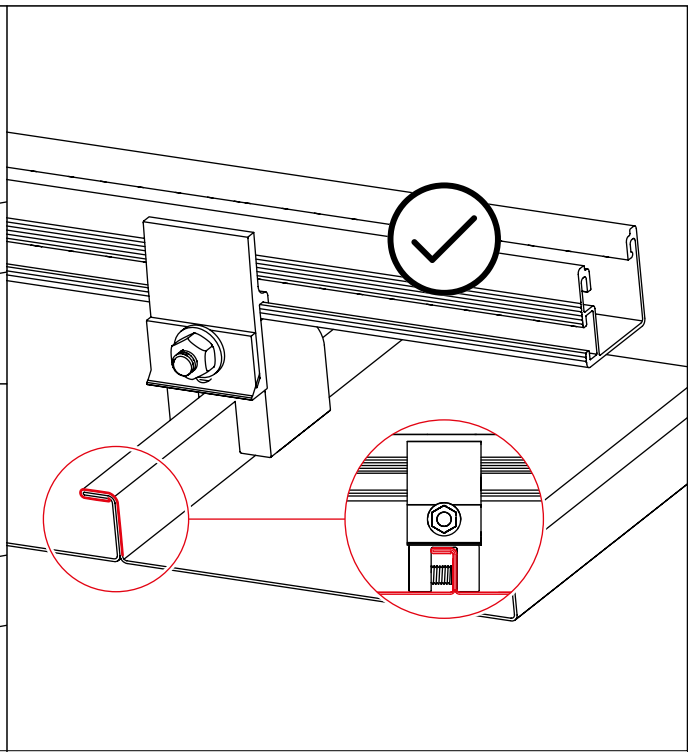

Assembly

Basic assembly

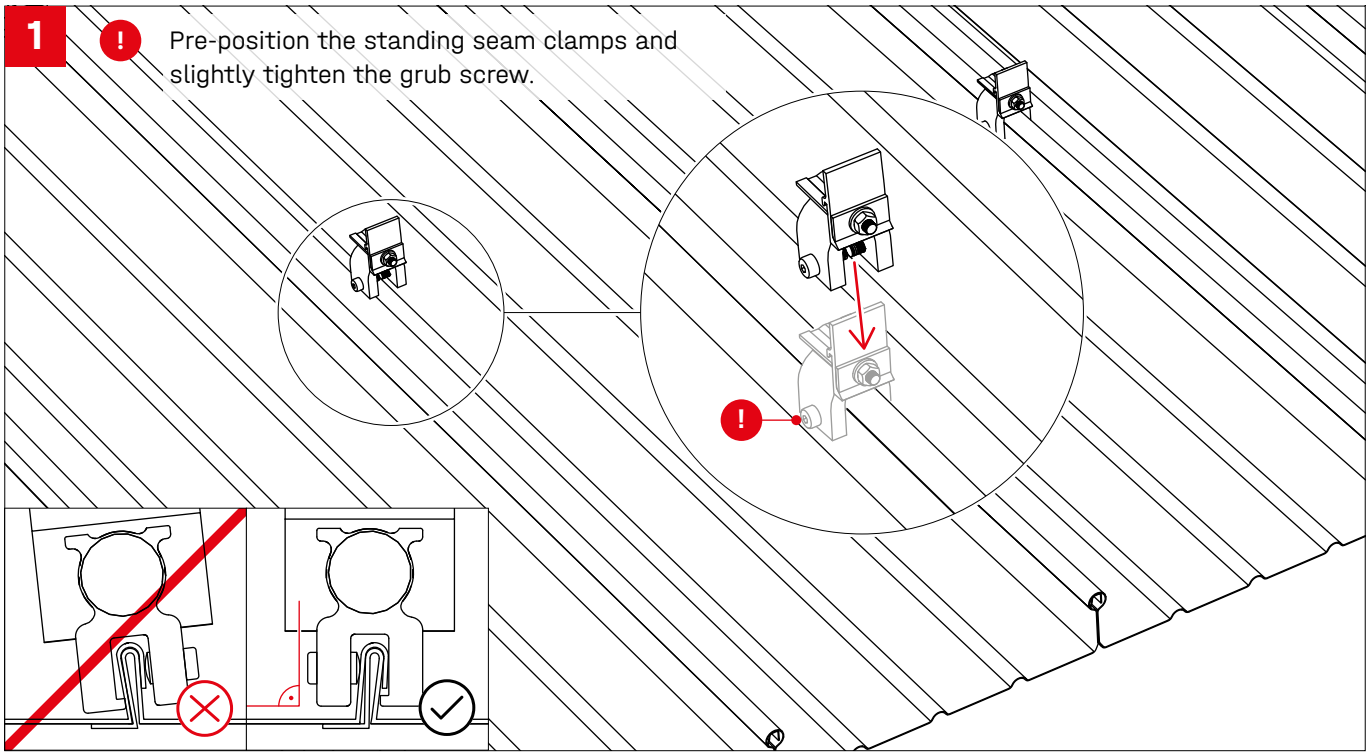

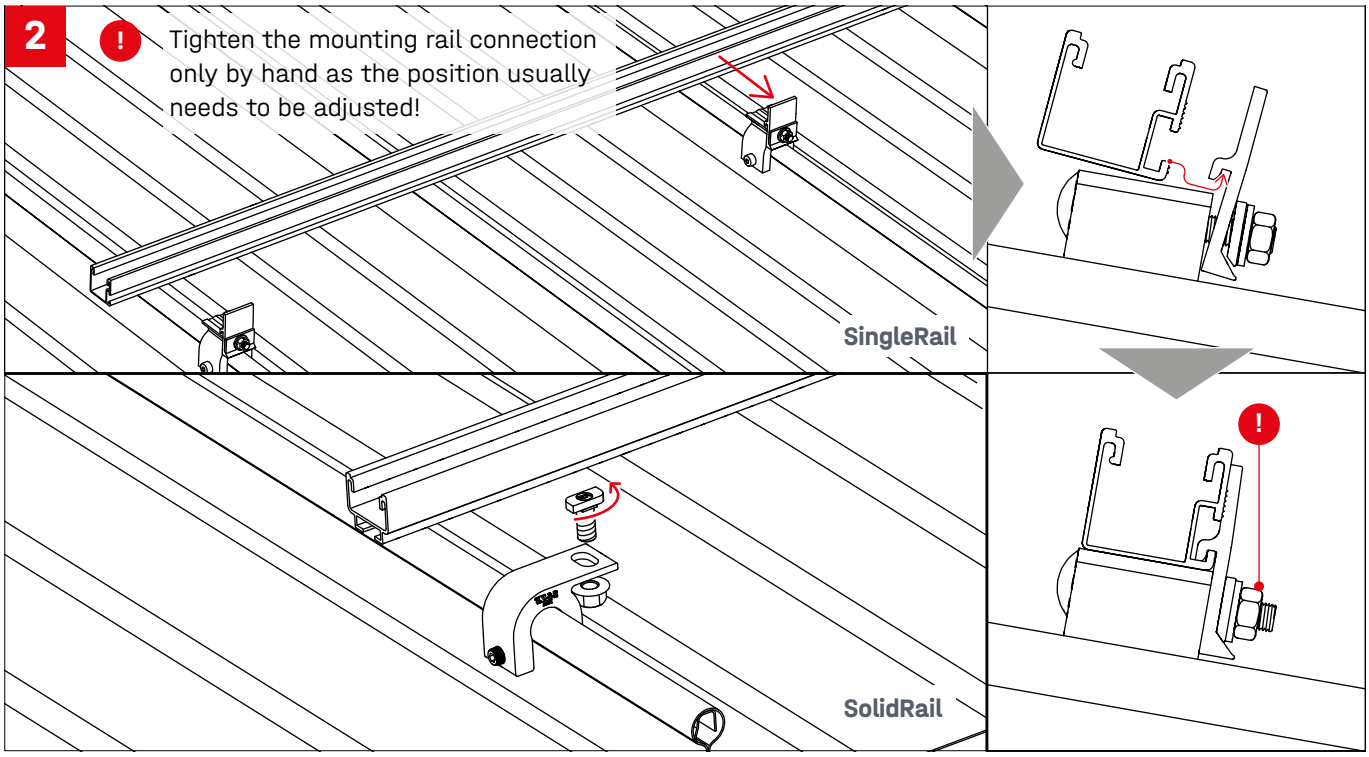

3a SingleRail

! Tightening torques [M_C , M_R]
see page 8!

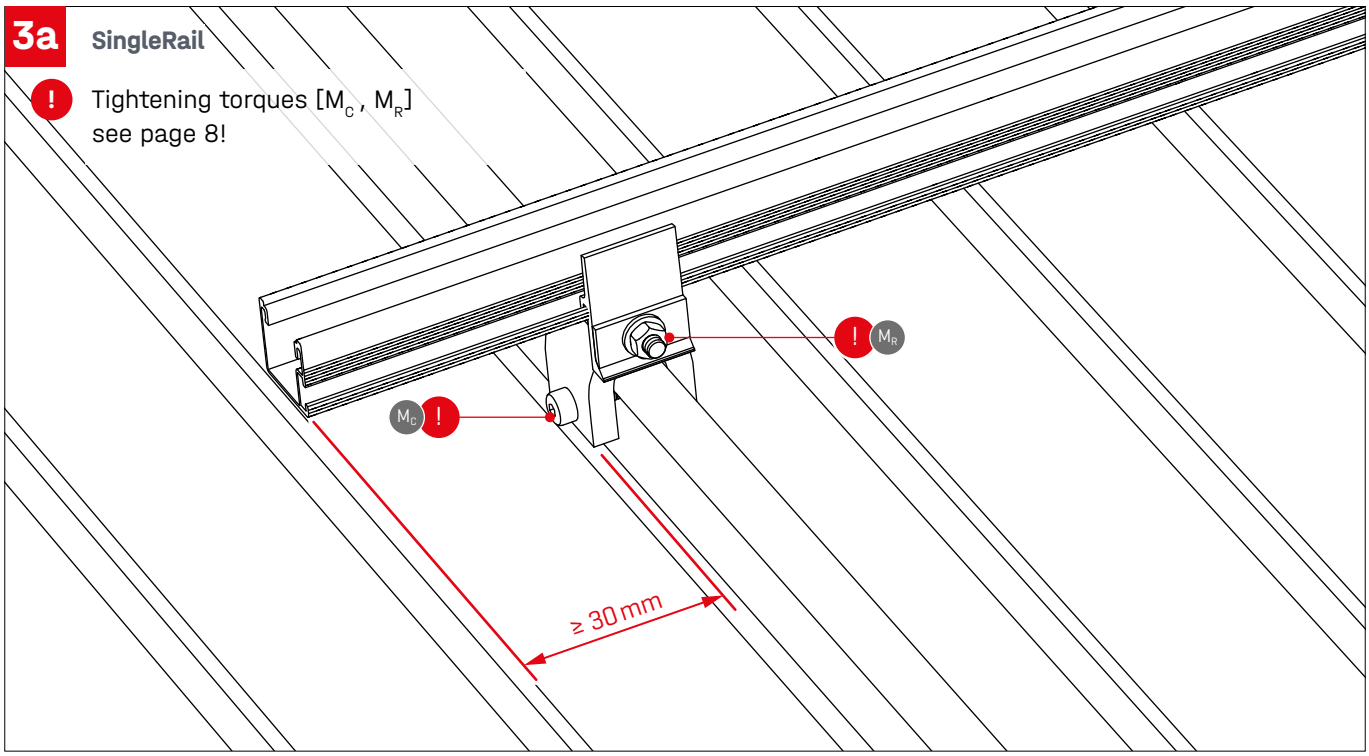

3b SolidRail

! Tightening torques [M_C , M_R]
see page 9/10!

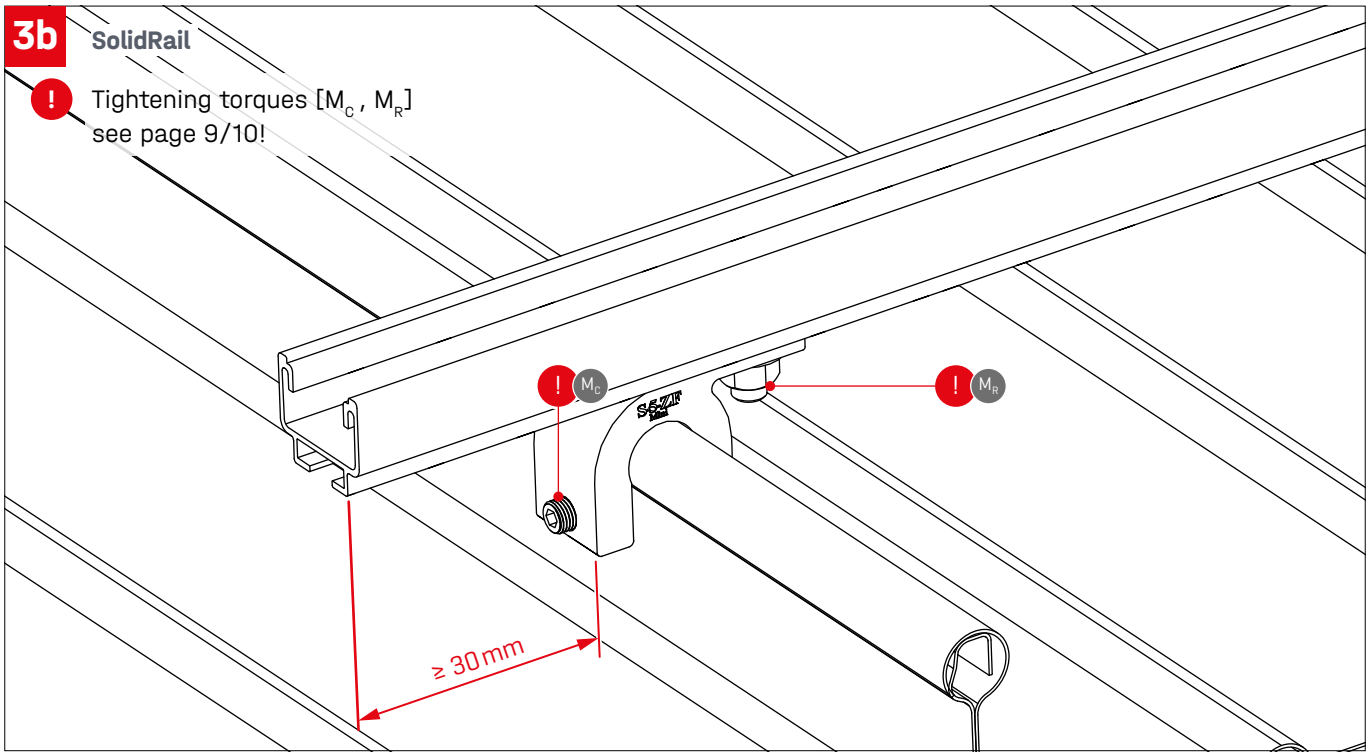

4a SingleRail 36/50 RailConnector

! No module clamp may be used in the area of the connector's spring.

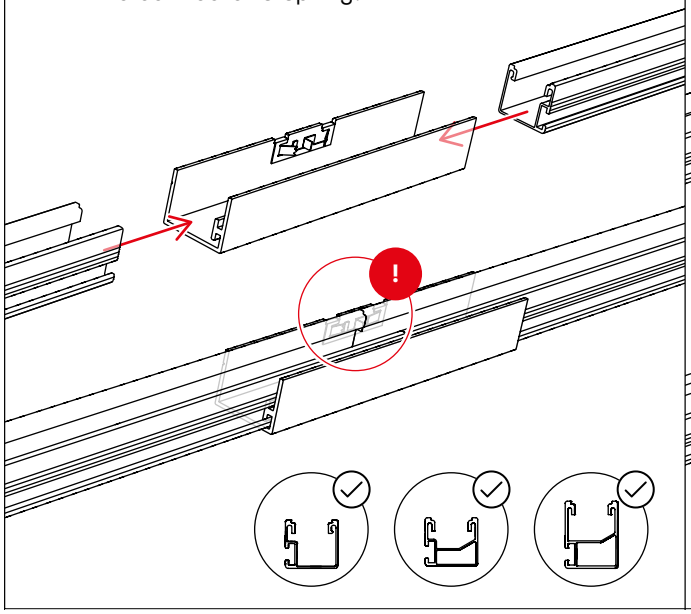

SingleRail 36/50 Connector Set

! 16 Nm

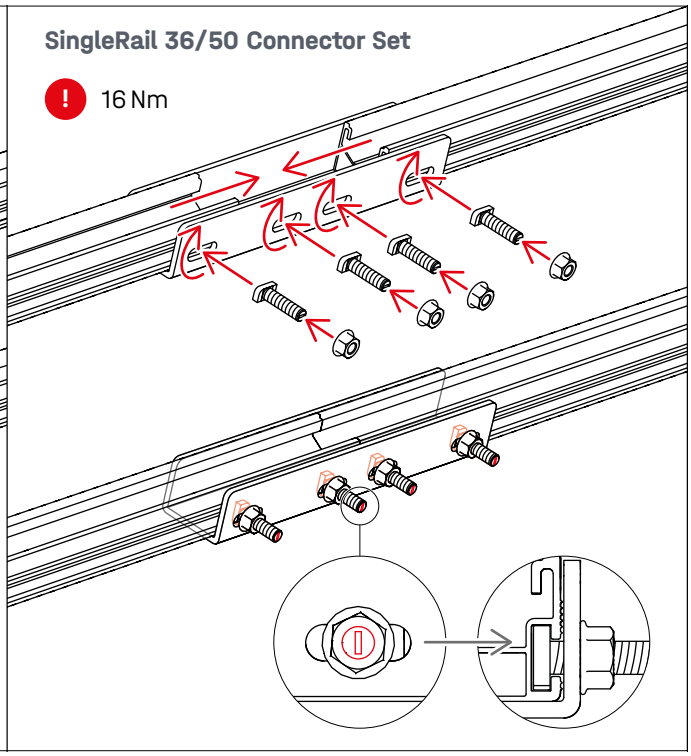

4b SolidRail Rail Connector Set

! 35 Nm

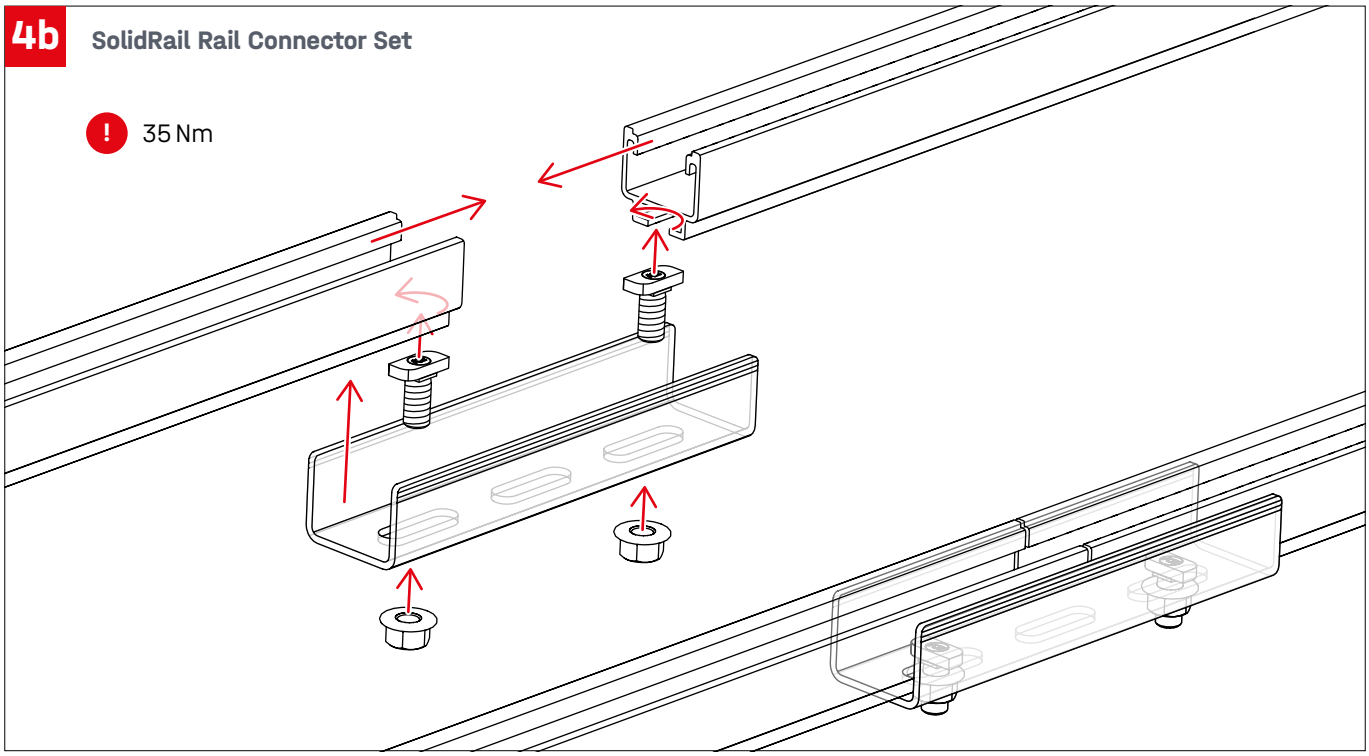

Portrait: 1 layer

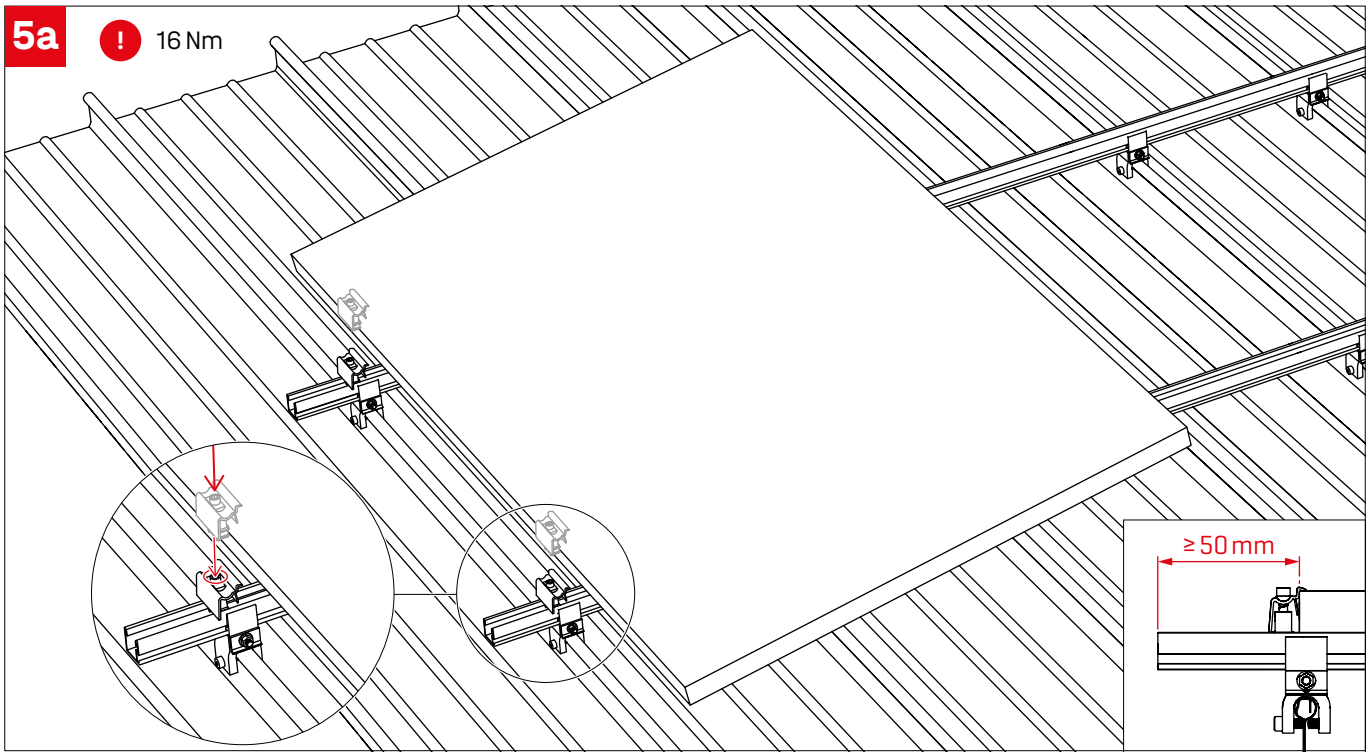

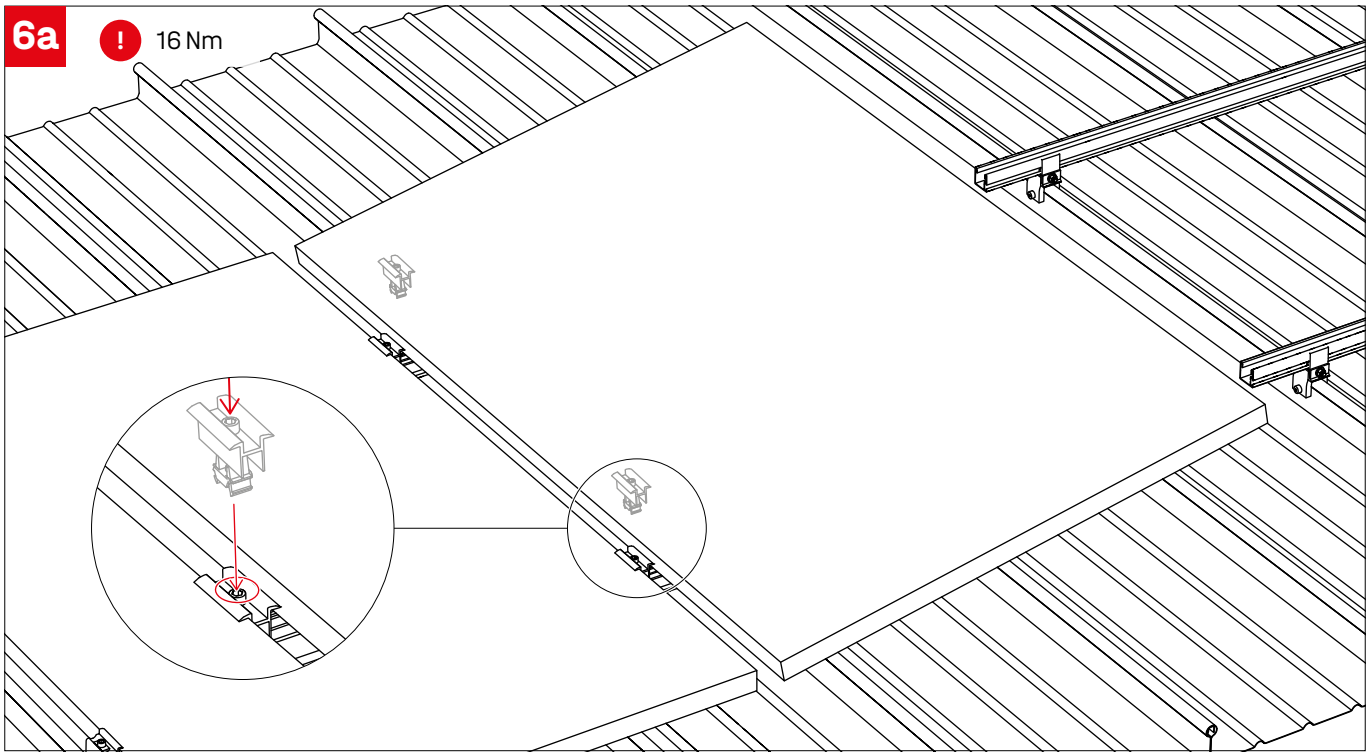

Landscape: 2 layers, clamping position long side

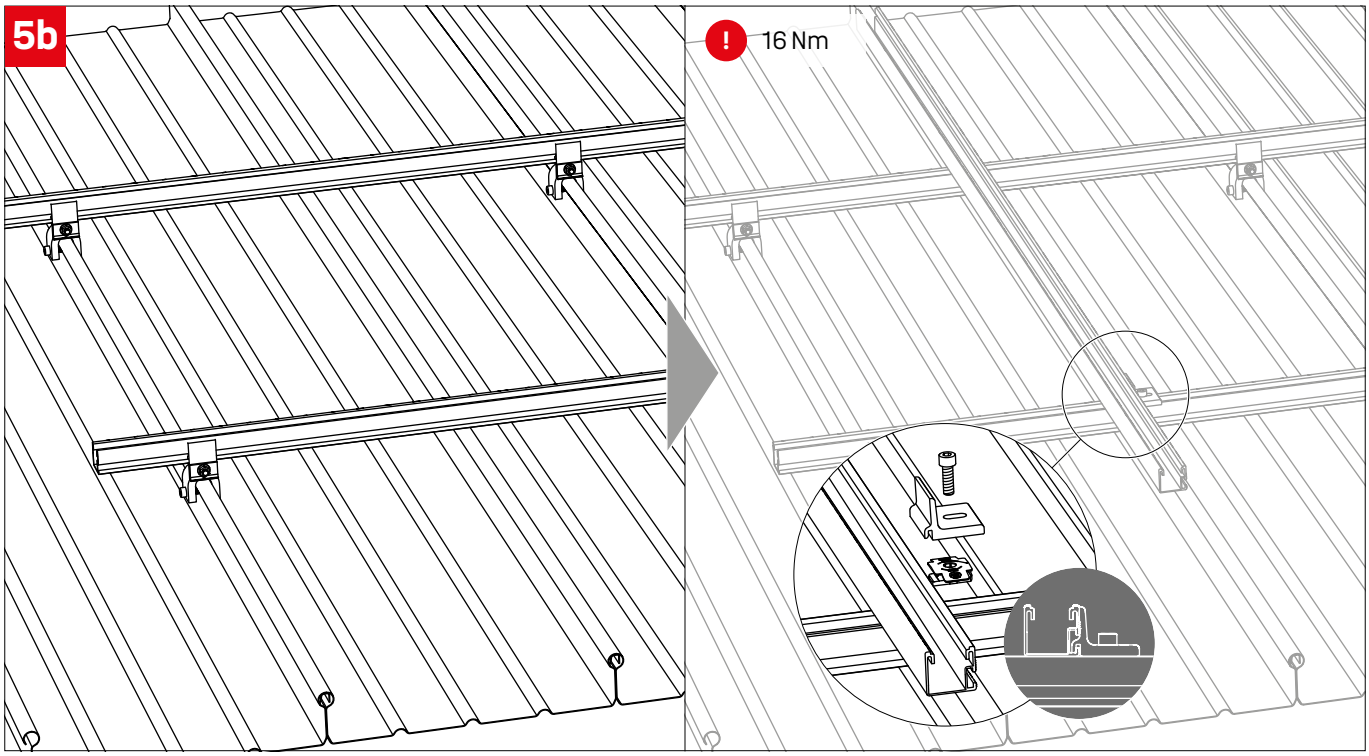

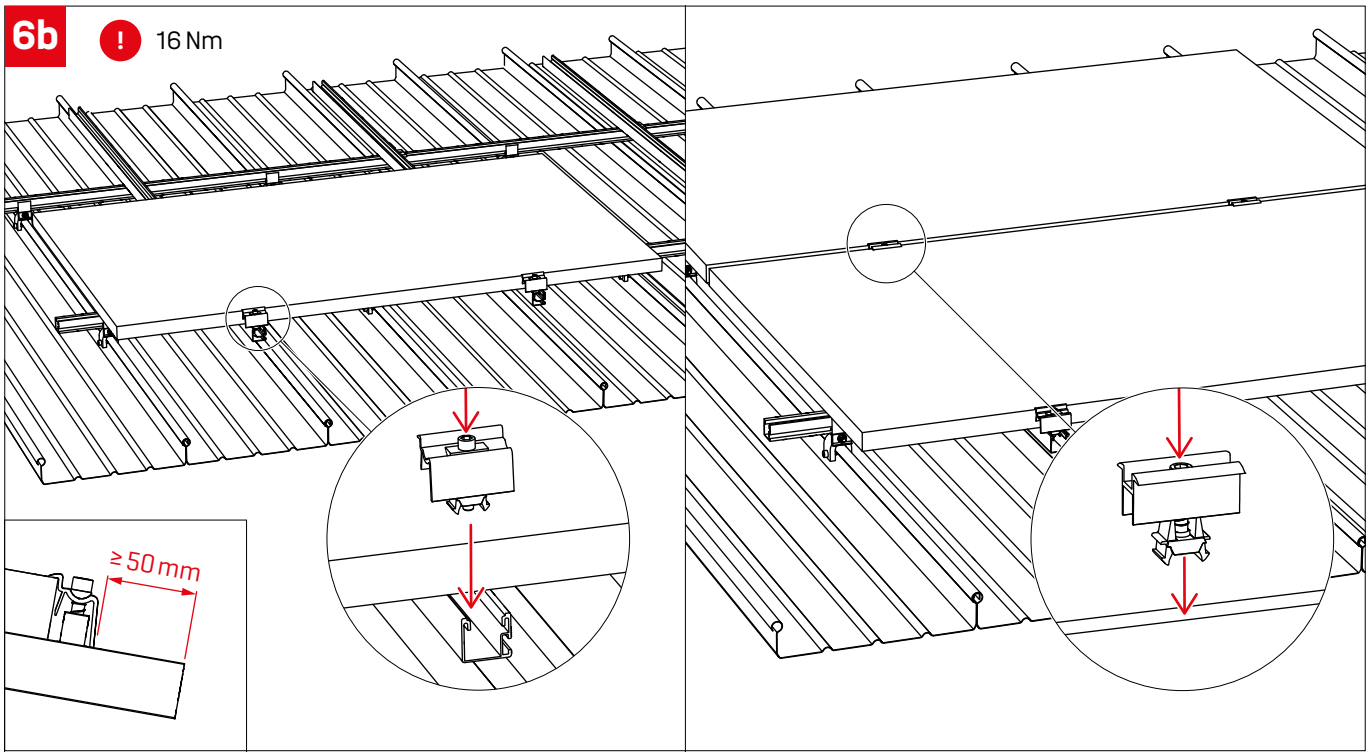

Landscape: 1 layer, clamping position short side

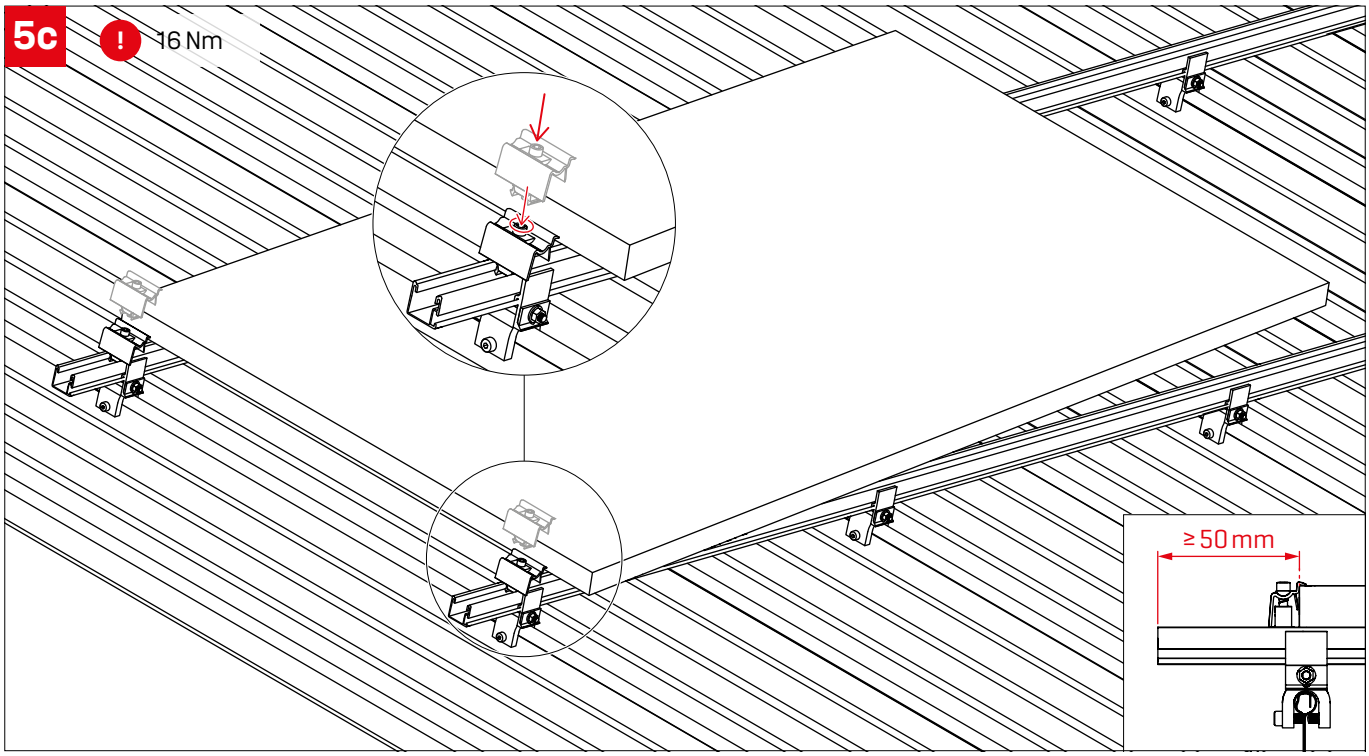

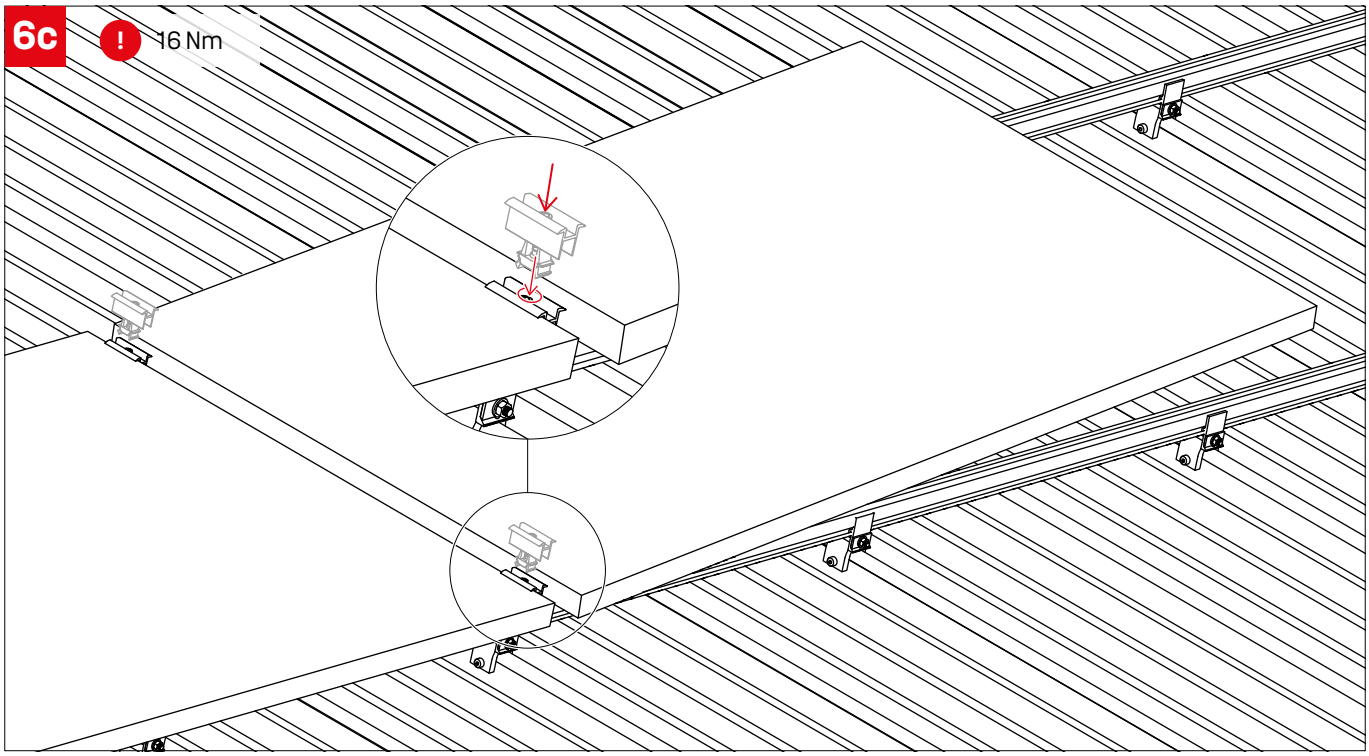

Thermal separations

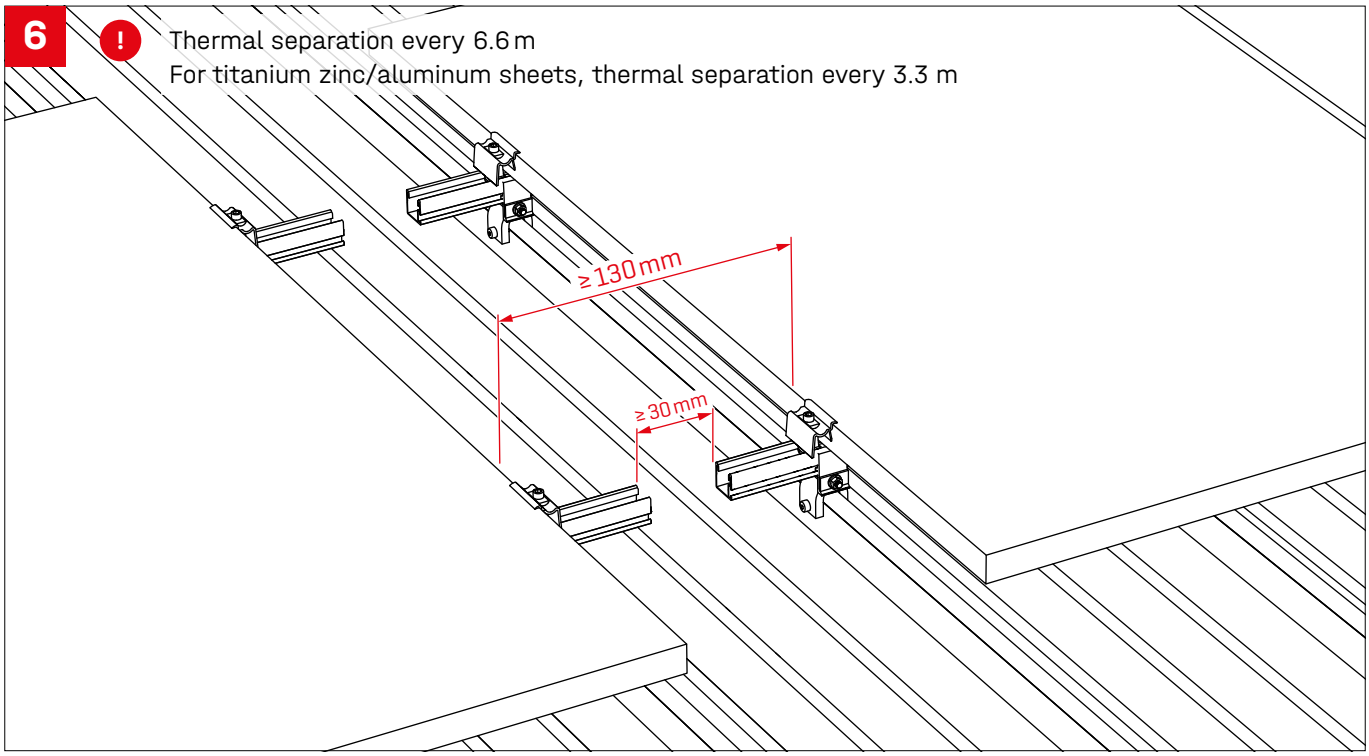

Optional

BlackCover

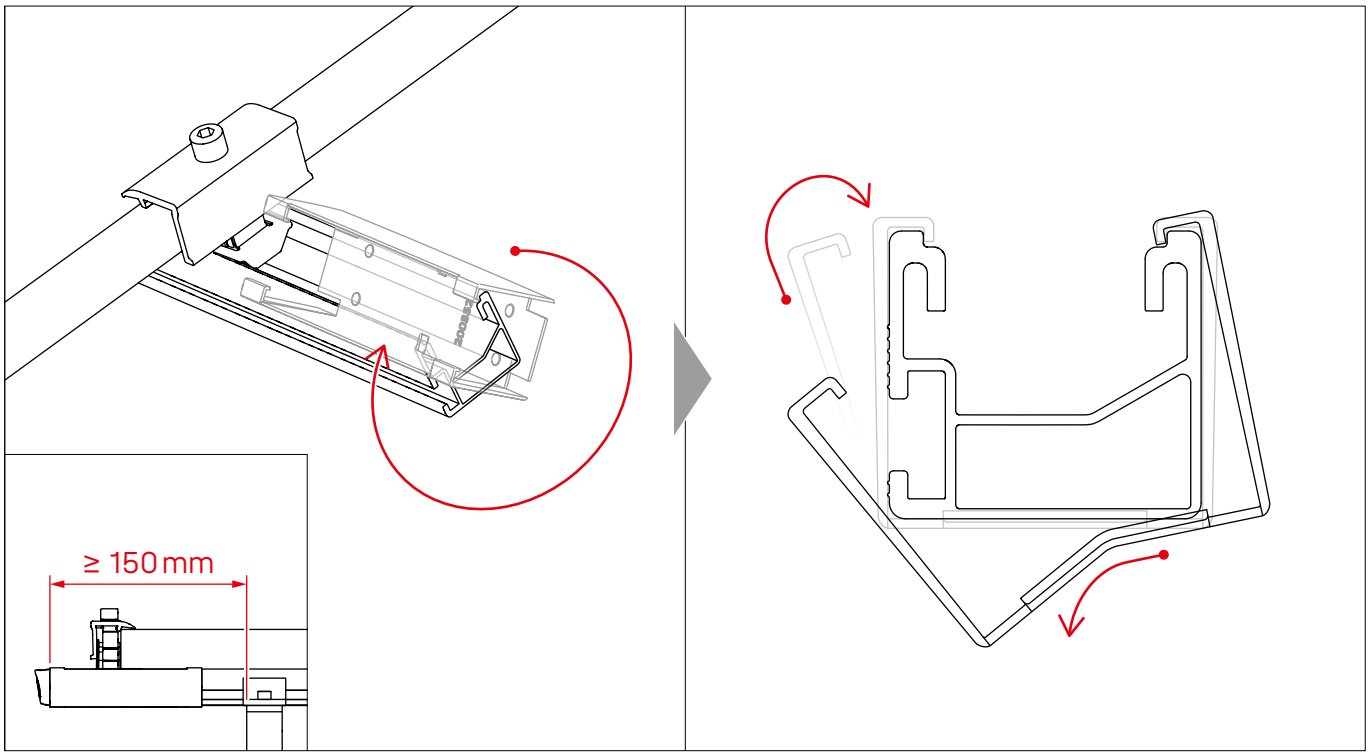

EndCap

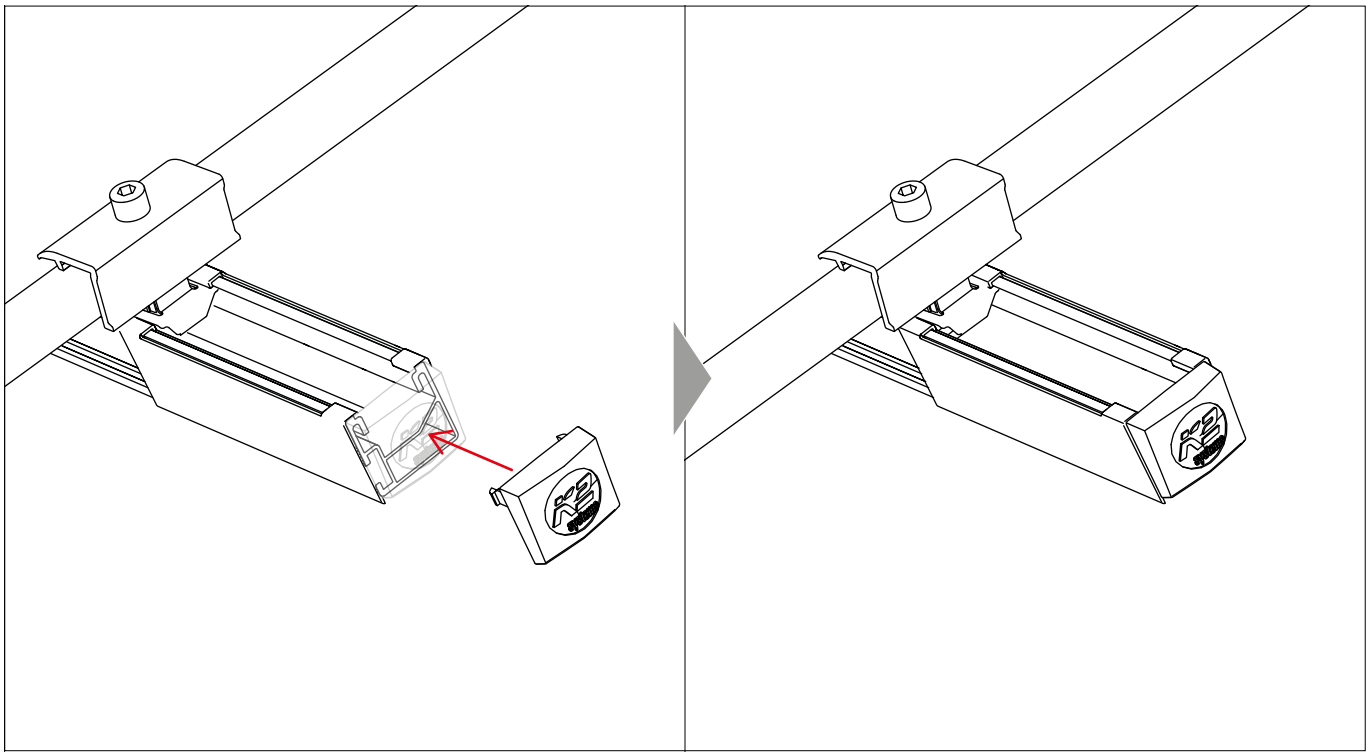

Connecting Strength

Thank you for choosing a K2 mounting system.

Mounting ystems from K2 Systems are quick and easy to install. We hope these instructions have helped. Please contact us with any questions or suggestions for improvement. Our contact data:

- **k2-systems.com/en/contact**
- **Service Hotline: +49 7159 42059-0**

Our General Terms of Business apply. Please refer: k2-systems.com

K2 Systems GmbH
Haldenstraße 1 · 71272 Renningen · Germany
+49 (0) 7159 - 42059 - 0 · info@k2-systems.com · k2-systems.com

Standing Seam Clamps Assembly DE V5 | 0726 · Subject to change
· Product illustrations are exemplary and may differ from the original.