IQ8 Series Microinverters

The high-powered, smart grid-ready IQ8 Series Microinverters are designed to match the latest generation high-output PV modules. The IQ8 Series Microinverter has the highest energy production and reliability standards in the industry, and with rapid shutdown functionality, it meets the highest safety standards.



Enphase 25 year warranty

CE

Key specifications	IQ8MC-72-M-INT	IQ8AC-72-M-INT	IQ8HC-72-M-INT
Max. AC output power	330 W	366 W	384 W
Nominal grid voltage	230 V		
Nominal frequency	50 Hz		
European weighted efficiency	96.7 %	96.6 %	96.8 %
Min./Max. voltage	18/60 V		
Min./Max. MPP voltage	25/45 V	28/45 V	29.5/45 V
Max. short-circuit DC input current	25 A		
Ambient air temperature range	–40°C to 65°C (–40°F to 149°F)		

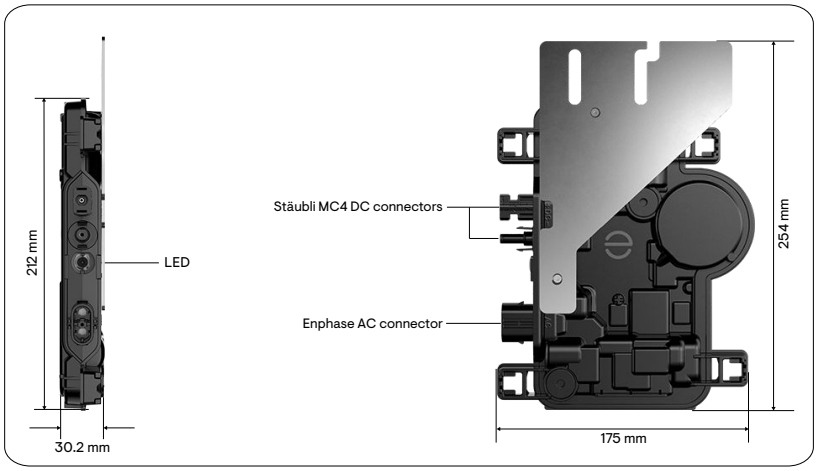

Easy

- Lightweight and compact with integrated Stäubli MC4 connectors for easy installation
- Fast installation with simple AC cabling
- Faster firmware upgrades enabled by the new integrated circuit technology

Reliable

- More than 1 million power-on hours of reliability testing
- Patented Burst Mode technology provides increased energy production
- Low-voltage DC and rapid shutdown for the ultimate fire safety
- Industry-leading warranty of up to 25 years[1]

Compatible

- Compatible with existing IQ7 systems, allowing seamless expansion of your solar capacity as energy requirements grow[2]

[1] A 25-year warranty is valid, provided an internet-connected IQ Gateway is installed.
[2] For details, see the "Compatibility with IQ7 Series Microinverters" section.

© 2026 Enphase Energy. All rights reserved. Enphase, the e and CC logos, IQ, and certain other marks listed at https://enphase.com/trademark-usage-guidelines are trademarks of Enphase Energy, Inc. in the U.S. and other countries. Data subject to change.

Input data (DC)	Parameters	Units	IQ8MC-72-M-INT	IQ8AC-72-M-INT	IQ8HC-72-M-INT
Typical module compatibility	—	—	54-cell/108-half-cell, 60-cell/120-half-cell, 66-cell/132-half-cell, 72-cell/144-half-cell. No enforced DC/AC ratio and maximum input power. Modules can be paired as long as the maximum input voltage is not exceeded and the maximum input current of the inverter is respected at the lowest and highest temperatures. See the compatibility calculator at https://enphase.com/en-gb/installers/microinverters/calculator.		
Min./Max. voltage	Udcmin/ Udcmax	V	18/60		
Startup input voltage	Udcstart	V	22		
Rated input voltage	Udc,r	V	35.0	36.5	37.0
Min./Max. MPP voltage	Umppmin/ Umppmax	V	25/45	28/45	29.5/45
Min./Max. operating voltage	Uopmin/ Uopmax	V	18/58		
Max. input current	Idcmax	A	14		
Max. short-circuit DC input current	Iscmax	A	25 Maximum short-circuit current for modules (Isc) allowed to be paired with IQ8 Series Microinverters: 20 A (calculated with 1.25 safety factor as per IEC 62548).		
Max. input power[3]	Pdcmax	W	480	530	560

Output data (AC)	Parameters	Units	IQ8MC-72-M-INT	IQ8AC-72-M-INT	IQ8HC-72-M-INT
Max. AC output power	Pac,max	W	330	366	384
Max. apparent power	Sac,max	VA	325	360	380
Rated power	Pac,r	W	325	360	380
Nominal grid voltage	Uacnom	V	230		
Min./Max. grid voltage	Uacmin/ Uacmax	V	184/276		
Max. output current	Iacmax	A	1.43	1.59	1.67
Nominal frequency	fnom	Hz	50		
Min./Max. frequency	fmin/fmax	Hz	45/55		
Max. units per single/Multi-phase 20 A circuit	16 A/ Iacmax	—	11 (L+N)/33 (3L+N)	10 (L+N)/30 (3L+N)	9 (L+N)/27 (3L+N) For IQ Cable with 2.5 sq.mm stranded conductors and using a 1.25 safety factor, 16 A per phase is calculated as the maximum current according to IEC 60364. Safety factors applied may vary based on local regulations or best practices, as well as upon the characteristics of the OCPD.
Max. units per single/ Multi-phase IQ Cable section	—	—	8 (L+N)/18 (3L+N) Centre feeding is the best practice. These design limits should ensure voltage rise and line conductor resistance on the IQ Cable are maintained within acceptable limits. In locations with a risk of high grid voltage at the point of connection, it may be necessary to decrease the maximum number of microinverters on the IQ Cable section by as much as 50%.		
Protective class (all ports)	—	—	II		
Total harmonic distortion	—	%	<5		
Power factor setting	—	—	1.0		

[3] Pairing PV modules with wattage above the limit may result in additional clipping losses. See the compatibility calculator at https://enphase.com/en-gb/installers/microinverters/calculator.

Output data (AC)	Parameters	Units	IQ8MC-72-M-INT	IQ8AC-72-M-INT	IQ8HC-72-M-INT
Power factor range	cos phi	—	0.8 leading ... 0.8 lagging		
Inverter maximum efficiency	ηmax	%	97.5	97.3	97.4
European weighted efficiency	ηEU	%	96.7	96.6	96.8
Inverter topology	—	—	Isolated (HF transformer)		
Night-time power loss	—	mW	50		

Mechanical data	IQ8MC-72-M-INT	IQ8AC-72-M-INT	IQ8HC-72-M-INT
Ambient air temperature range	–40°C to 65°C (–40°F to 149°F)		
Relative humidity range	4% to 100% (condensing)		
Overvoltage class AC port	III		
Number of input DC connectors (pairs) per single MPP tracker	1		
AC connector type	IQ Cabling (refer to the IQ Cable and accessories data sheet)		
DC connector type	Stäubli MC4		
Dimensions (H × W × D)	212 mm (8.3") × 175 mm (6.9") × 30.2 mm (1.2") (without mounting brackets)		
Weight (with mounting plate)	1.1 kg (2.4 lb)		
Cooling	Natural convection—no fans		
Enclosure	Class II double-insulated, corrosion-resistant polymeric enclosure		
IP rating	Outdoor – IP67		
Altitude	<2600 m (8530 ft)		
Calorific value	37.5 MJ/unit		

Standards	IQ8MC-72-M-INT	IQ8AC-72-M-INT	IQ8HC-72-M-INT
Grid compliance	G98, G99, G100		
Safety	EN IEC 62109-1, EN IEC 62109-2		
EMC	EN IEC 61000-3-2, 61000-3-3, 61000-6-2, 61000-6-3, EN IEC 50065-1, 50065-2-2, EN 55011[4]		
Product labelling	CE		
Advanced grid functions[5]	Power export limiting (PEL), phase imbalance management (PIM), loss of phase detection (LOP), power factor control Q (U), cos phi (P)		
Microinverter communication	Power line communication (PLC) 110–120 kHz (Class B), narrowband 200 Hz		

Compatibility with IQ7 Series Microinverters

- IQ8 Series Microinverters can be added to existing IQ7 systems on the same IQ Gateway/IQ Combiner/IQ System Controller only in the following configurations: (i) Solar Only or (ii) Solar Plus Battery (IQ Battery 3T/10T or IQ Battery 5P) grid-tied or Solar Plus Battery (IQ Battery 5P) with backup with IQ System Controller 3 INT.
- IQ7 Series Microinverters cannot be added to a site with existing IQ8 Series Microinverters on the same gateway.
- Mixed system of IQ7 and IQ8 will not support the IQ8-specific Sunlight Jump Start feature.
- The peak power output of the IQ7, IQ8 Microinverter arrays must not exceed 150% of the IQ Battery's total rated power output. If the microinverter array exceeds this ratio, PV shedding must be implemented to shed excess PV when the system transitions to off-grid mode.

[4] At STC within the MPP range.
[5] Some of these functions require IQ Gateway Metered with current transformers and/or IQ Relay installed.

IQ8 Series Microinverters rated power vs PCU temperature

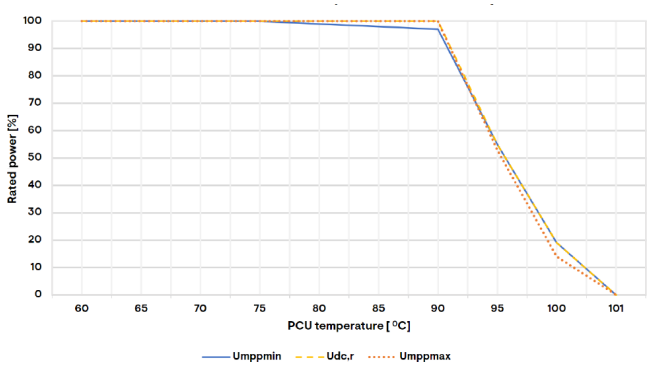

IQ8 Series Microinverters efficiency curve

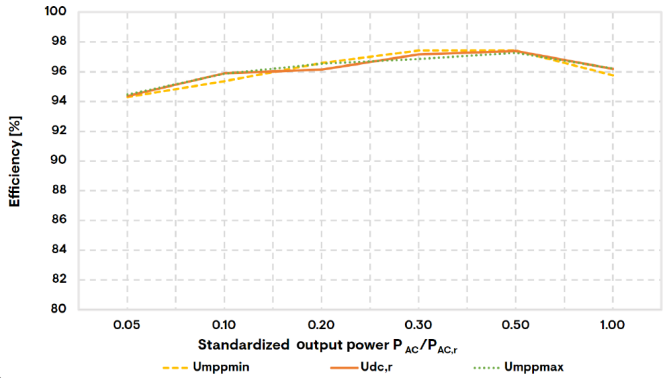

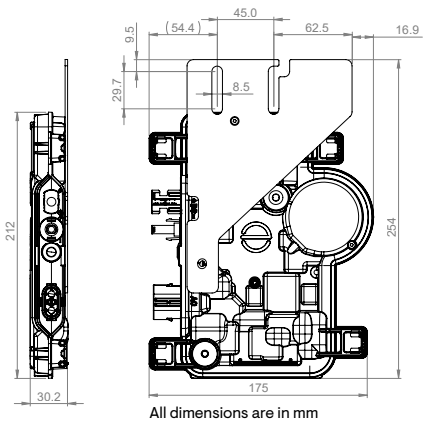

All dimensions are in mm

IQ8 Series Microinverters

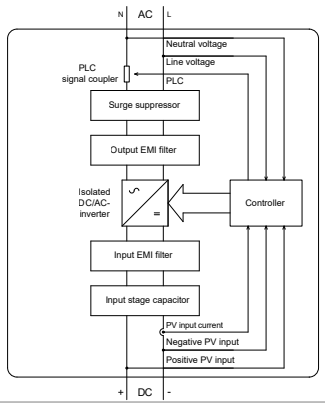

Assembled in China, India, or U.S.
Manufacturer: Enphase Energy Inc. 47281 Bayside Pkwy, Fremont, CA 94538, United States of America, Tel: +1 (707) 763-4784
Importer: Enphase Energy NL B.V., Het Zuiderkruis 65, 5215MV, ‘s-Hertogenbosch, The Netherlands, Tel: +31 73 3035859

Components of the Enphase Energy System



IQ Battery

All-in-one AC-coupled storage solution that integrates seamlessly with your solar energy system, providing reliable backup power and intelligent energy management for maximum performance and energy savings.



IQ Gateway

The IQ Gateway is a device that performs energy management, provides internet connectivity, and integrates with the IQ Series Microinverters to provide complete control and insights into the Enphase Energy System.[6]



IQ Cabling

Install microinverters quickly and safely with IQ Cabling. With multi-phase IQ Cabling, the installed capacity is automatically distributed evenly across all three phases.

[6] A 25-year warranty is valid, provided an internet-connected IQ Gateway is installed.

Revision history

Revision	Date	Description
DSH-00198-5.0	March 2026	• Updated the introduction. • Updated information on backward compatibility with IQ7/IQ8 Series Microinverters.
DSH-00198-4.0	February 2025	Updated information on backward compatibility with IQ7 Series Microinverters.
DSH-00198-3.0	May 2024	Added the row “Maximum AC output power” in the “Output Data (AC)” section, updated the maximum apparent power values, and made editorial updates.
DSH-00198-2.0	September 2023	Initial release.
DSH-00198-1.0	August 2023	Preliminary release.