IQ Battery 5P with FlexPhase

The IQ Battery 5P with FlexPhase is an all-in-one AC-coupled system that is powerful, reliable, simple, and safe. The battery can be used flexibly in both single-phase and three-phase applications. It has a total usable energy capacity of 5.0 kWh and includes six embedded IQ8T-BAT Microinverters providing up to 3.84 kVA continuous power in single-phase configuration and up to 1.28 kVA continuous power per phase in three-phase configuration.

Enphase 15 year limited warranty

Key specifications	Single-phase	Three-phase
Rated (continuous) output power[1]	3.84 kVA	3.84 kVA (1.28 kVA per phase)
Rated output current	16.7 A	16.7 A (5.56 A per phase)
Nominal AC voltage	230 V_{L-N}	230 V_{L-N}, 400 V_{L-L}
Nominal frequency	50 Hz	
Usable capacity	5.0 kWh	
Ambient operating temperature range	-20°C to 55°C	
Chemistry	Lithium iron phosphate (LFP)	
Mounting	Wall-mount/pedestal-mount	

Dimensions in mm

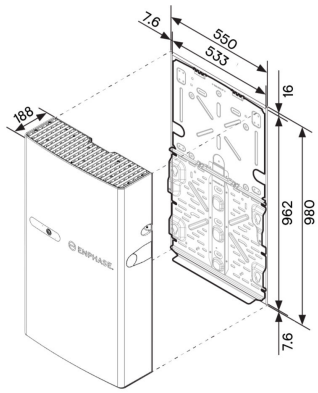

Wall-mounted

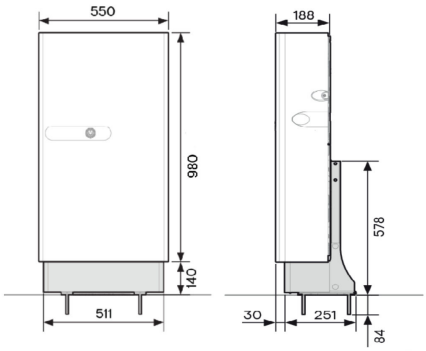

Floor-mounted with pedestal

Powerful

- Provides continuous power of up to 3.84 kVA (single-phase) or up to 1.28 kVA per phase (three-phase)
- Includes six IQ8T-BAT Microinverters for reliable performance

Reliable

- 15-year limited warranty
- Passive cooling—no moving parts
- Uses wired control communication
- Remote software and firmware updates

Simple

- AC-coupled system for fast installation and commissioning
- Supports Self-Consumption, Full Backup, time-of-use (TOU) modes, and is VPP Ready.
- Monitor and control via the Enphase App
- Field replaceable components

Safe

- Evaluated to UL 9540A, the highest industry standard for battery safety
- Lithium iron Phosphate (LFP) chemistry for safety and longevity

[1] Multiple models are available. Refer to the following page for model-specific ratings.

© 2026 Enphase Energy. All rights reserved. Enphase, the e and CC logos, IQ, and certain other marks listed at https://enphase.com/trademark-usage-guidelines are trademarks of Enphase Energy, Inc. in the U.S. and other countries. Data subject to change.

Product details	IQ Battery 5P with FlexPhase
Order code	IQBATTERY-5P-3P-INT
Description	The IQ Battery 5P with FlexPhase is an AC-coupled battery (convertible between single-phase and three-phase)[2] with integrated IQ8T-BAT Microinverters and a battery management system (BMS) with battery controller

Limited warranty	
Limited warranty	>60% capacity, up to 15 years or 6000 cycles[3]

Output	Units	Default single-phase	Default three-phase
Rated (continuous) output apparent power	kVA	3.84[4]	3.84 (1.28 per phase)
Rated output current	A	16.7[4]	16.7 (5.56 per phase)
Peak output current (3 seconds, 10 seconds)	A	33.4[4], 26.7[4]	33.4 (11.3 per phase), 26.7 (8.9 A per phase)
Nominal AC voltage	V_{L-N} V_{L-L}	230 –	230 400
Nominal AC voltage range	V_{L-N} V_{L-L}	213–253 –	213–253 366–457
Nominal frequency	Hz	50	
Nominal frequency range	Hz	47–53	
Power factor, grid-tied	–	0.8 leading ... 0.8 lagging	
Power factor, backup	–	1.0 leading ... 1.0 lagging	
AC round-trip efficiency	–	90%	
Operating modes	–	Supports Self-Consumption, Full Backup[5], AI Optimisation[6], and is VPP Ready[7]	

Output	Unit	Single-phase			
Model name[8]	–	IQBATTERY-5P-3P-INT-X.XX-1P			
X.XX[8]	–	1.65	2.50	3.00	3.68
Rated (continuous) output apparent power	kVA	1.65	2.50	3.00	3.68
Rated output current	A	7.17	10.87	13.04	16
Peak output current (10 seconds)[9]	A	11.5	17.4	20.9	25.6
Peak output current (3 seconds)[9]	A	14.3	21.7	26.1	32
Nominal AC voltage	V_{L-N}	230			
Nominal AC voltage range	V_{L-N}	211–264			

Output	Unit	Three-phase
Model name[10]	–	IQBATTERY-5P-3P-INT-X.XX-3P

[2] Factory default configuration is set to single-phase. To switch to a three-phase configuration, refer to the instructions provided in the quick installation guide (QIG).
[3] Whichever occurs first. Restrictions apply. The full text of the warranty is available at https://enphase.com/installers/resources/warranty.
[4] Albania, Austria, Bulgaria, Switzerland, the Czech Republic, Denmark, Estonia, Finland, France, Greece, Lithuania, Latvia, Norway, Poland, Romania, Serbia, Sweden, Slovenia, and Slovakia have default rated (continuous) output apparent power is 3.68 kVA, rated output current is 16A, peak output current for 3 seconds is 32 A, and peak output current for 10 seconds is 25.6 A.
[5] IQ System Controller 3 INT is required for backup operation.
[6] Available in Germany, Belgium, Denmark, and France
[7] Supports internet connectivity and remote control by third-party VPP operators via API.
[8] In single-phase the model names would be IQBATTERY-5P-3P-INT-1.65-1P, IQBATTERY-5P-3P-INT-2.50-1P, IQBATTERY-5P-3P-INT-3.00-1P, and IQBATTERY-5P-3P-INT-3.68-1P.
[9] During the backup operation.
[10] The model names in three-phase are IQBATTERY-5P-3P-INT-1.84-3P, IQBATTERY-5P-3P-INT-2.50-3P, IQBATTERY-5P-3P-INT-3.00-3P, and IQBATTERY-5P-3P-INT-3.68-3P.

Output	Unit	Three-phase			
X.XX[10]	—	1.84	2.50	3.00	3.68
Rated (continuous) output apparent power	kVA	1.84	2.50	3.00	3.68
Rated (continuous) output apparent power per phase	kVA	0.61	0.83	1.0	1.23
Rated output current per phase	A	2.67	3.62	4.35	5.33
Peak output current per phase (10 seconds)[9]	A	4.27	5.8	6.97	8.53
Peak output current per phase (3 seconds)[9]	A	5.33	7.23	8.7	10.67
Nominal AC voltage	V_{L-L}	400			
Nominal AC voltage range	V_{L-L}	366 –457			

Battery module	Unit	
Usable capacity[11]	kWh	5.0
DC round-trip efficiency[12]	%	96
Nominal DC voltage/Operating DC voltage range	V	76.8/60–87
Ambient operating temperature (charging)[13]	°C	-20 to 50
Ambient operating temperature (discharging)[14]	°C	-20 to 55
Chemistry	—	Lithium iron phosphate (LFP)

Mechanical and electrical data	Unit	
Dimensions (H × W × D)	mm	980 × 550 × 188
Lifting weight	kg	69.5
Total installed weight	kg	83
IP rating - IQ Battery	—	IP55
IP rating - IQ8T-BAT Microinverter	—	IP67
Cooling	—	Natural convection
Altitude	m	Up to 2500
Mounting	—	Wall-mount (included) or pedestal-mount (sold separately)
Installation location	—	Indoor/Outdoor

Operation and Interfaces	
Communication	Wired control communication (Enphase recommended control cables)
Monitoring	Enphase Installer Platform, Enphase App, and API integration

[11] The battery's usable capacity supports loads and turns PV on (when off-grid), in normal daily operation. The usable capacity includes a safety-critical limit of 2% that safeguards the customer's asset in case of a long-duration grid outage. An additional 3% capacity is maintained for battery electronic sustenance during the night. Refer to https://link.enphase.com/iq-battery-usable-capacity-tech-brief for more information.
[12] At the beginning of life.
[13] A reduction in charging power occurs at temperatures below 15°C and above 45°C.
[14] A reduction in discharging power occurs at temperatures below 5°C and above 50°C.

Standards	
Grid compliance (with IQ Relay)	VDE-AR-N 4105:2018, NA/EEA-NE7 - CH2020, TOR Erzeuger Typ A V1.2 2022, 50549-1:2019, Synergrid C10/11,
Grid standard (without IQ Relay)	G98, G98 NI, G99, G99 NI, G100-2
EMC	EN 55011:2016+A11:2020, EN 55032, EN 61000-6 EMC, EN 61000-6-2, EN 61000-6-3, EN 61000-3, EN 61000-3-2, EN 61000-3-3, EN 61000-3-11, EN 61000-3-12, IEC 61326-1, EN 50065-1, EN 50065-2-2
Safety	UN 38.3, EN IEC 62109-1 & 2, EN 62040-1, EN 62909-1:2017, IEC 62619 2022, IEC/EN 62116
EC Declaration of Conformity[15]	Battery Regulation (EU) 2023/1542, Electro Magnetic Compatibility (EMC) Directive 2014/30/EU, Low Voltage Directive (LVD) 2014/35/EU, Directive (EU) 2024/232 + 2015/863/EU + 2011/65/EU on Restriction of Hazardous Substances (RoHS)
Product labelling	CE

What's in the box (Order code: IQBATTERY-5P-3P-INT)	
IQ Battery 5P with FlexPhase	Base battery unit of IQ Battery 5P with FlexPhase with six integrated IQ8T-BAT Microinverters
ID cover and conduit cover	IQ Battery ID cover along with four conduit covers, two each for the left and right sides of the unit
Bottom mounting bracket and top protective shield	Bottom mounting bracket for mounting the battery unit on the wall and one top protective shield
M5 locking screws	Two M5 locking screws for securing the battery unit on the bottom mounting bracket
M4 grounding screws	Two M4 grounding screws for securing the top protective shield on the bottom mounting bracket
M5 ID cover grounding screws	Two M5 ID cover grounding screws for fixing the ID cover to the battery base unit
Cable ties	Six cable ties for securing field cables to the unit
Control (CTRL) connector	One pre-installed and one spare CTRL connector without the resistor for CTRL wiring
Control (CTRL) connector with resistor	One pre-installed and one spare CTRL connector with the resistor for CTRL wiring
Quick install guide (QIG)	IQ Battery 5P with FlexPhase installation instructions
Control (CTRL) drain connector	One pre-installed and one spare CTRL drain connector for CTRL wiring
Drill template	One drill template for marking drilling locations on the mounting surface

Accessories and replacement parts	
IQBATTERY-5P-3P-INT-RMA	IQ Battery 5P with FlexPhase unit for field replacement
B305-CX-0550-O	IQ Battery 5P cover only (includes one ID cover)
B305-CP-0140-O	IQ Battery 5P conduit plates only (includes four conduit covers, two each for the left and right sides of the unit)
B05-WB-0543-O	IQ Battery 5P wall bracket only (includes one wall bracket and one top shield)
B05-PM-0550-O	IQ Battery 5P Pedestal Mount

[15] Full text of the EU Declaration of Conformity (DoC) is available at https://enphase.com/de-de/download/iq-battery-5p-flexphase-eu-konformitatserklarung.

Accessories and replacement parts	
IQBATTERY-HNDL-5	One set of IQ Battery 5P Lifting Handles (includes one left-side and one right-side lifting handle)
B305-ACFB-200-O	IQ Battery 5P AC filter board only (includes AC filter board PCBAs)
B305-BMSIA-0490-O	IQ Battery 5P BMS board only (includes one BMS board PCBA of INT)
B305-IICS-0524-O	IQ Battery 5P in-house control switch only. Includes one in-house control switch preinstalled on the IQ Battery 5P wiring cover (INT)
B305-CANBI-042-O	IQ Battery 5P control communications board only (includes one control communications PCBA)
IQ8T-BAT-RMA	Enphase IQ8T-BAT Microinverter for IQ Battery 5P with FlexPhase for field replacement
B305-TBL-077-O	IQ Battery 5P Line terminal block
B305-TBN-077-O	IQ Battery 5P Neutral terminal block
B305-TBG-077-O	IQ Battery 5P Ground terminal block
B305-FUSE-0005-O	IQ Battery 5P fuse
B305-TBJ-085-O	IQ Battery 5P jumper
B305-PATCH-078-O	Replacement labels for the IQ Battery 5P with FlexPhase power rating

Compatibility	
IQ Gateway Metered	ENV-S-WM-230
IQ Relay (single-phase and three-phase)	Q-RELAY-1P-INT and Q-RELAY-3P-INT
Communications Kit 2 INT (for grid-tied operation)	COMMS-KIT-INT-02
IQ System Controller 3 INT (for backup operation)	SC100G-M230ROW, SC100G-M230-3P[16]
IQ Combiner 2 EU 3P	X-IQ-EURO-230-3P-4-2
Enphase-Belcom control cable	CTRL-BL-EU-01
Solar inverters	IQ Series Microinverters, third-party PV string inverters[17]

Note for third-party products
Any third-party manufacturer or importer of product(s) used to install or commission Enphase product(s) shall comply with the applicable EU Directive(s) and requirements in the European Economic Area (EEA). It is the responsibility of the installer to confirm that all such products are labelled correctly and have the required compliant supporting documentation.
Manufacturer: Enphase Energy Inc., 47281 Bayside Pkwy., Fremont, CA, 94538, United States of America, PH: +1 (707) 763-4784
Importer: Enphase Energy NL B.V., Het Zuiderkruis 65, 5215MV, 's-Hertogenbosch, The Netherlands, PH: +31 73 3035859
Assembled in China.

[16] Only for UK.
[17] Refer to the system planning guide for more information on using third-party PV string inverters with IQ System Controller 3 INT in grid-tied systems.

Components of the Enphase Energy System

IQ System Controller 3 INT

The system controller is an integrated enclosure containing all components necessary for backup operation in case of grid outage.

IQ Microinverters

IQ Series Microinverters pack more power into less space than other rooftop solar systems and make rooftop solar more productive, reliable, smart, and safe.

IQ Gateway and Communications Kit 2 INT

The IQ Gateway with current transformers provides complete control and insight into the Enphase Energy System.

The Communications Kit 2 INT enables wired communication between the battery and the gateway for grid-tied operation.

IQ Combiner 2 EU 3P

A pre-wired plug-and-play solution with
IQ Gateway Metered, three-phase IQ Relays, Communications Kit 2, circuit breakers, and residual current device.

IQ EV Charger 2

The IQ EV Charger 2 is a smart, reliable, and economical EV charger with AI-powered home energy management via the Enphase App. It integrates into your home's energy system offering seamless indoor/outdoor charging, advanced safety features, and a 5-year warranty for peace of mind.

IQ Battery 5P with FlexPhase accessories

The lifting handles are reusable and ease the installation process.

The pedestal enables floor mounting of the battery.

Revision history

Revision	Date	Description
DSH-00477-7.0	May 2026	Added model information for Belgium and Greece.
DSH-00477-6.0	November 2025	Added the Norway region to the non-availability list of IQBATTERY-5P-3P-INT-3.84-1P.
DSH-00477-5.0	September 2025	• Updated Specifications table. • Added IQ EV Charger 2 and IQ Combiner 2 EU 3P details to the “Components of the Enphase Energy System” section.
DSH-00477-4.0	August 2025	Consolidated the data sheet for EMEA region.
DSH-00477-3.0	January 2025	Added the Luxembourg region. Removed the preliminary tag.
DSH-00477-2.0	October 2024	Added footnotes and editorial updates.
DSH-00477-1.0	June 2024	Initial release.