Connecting Strength

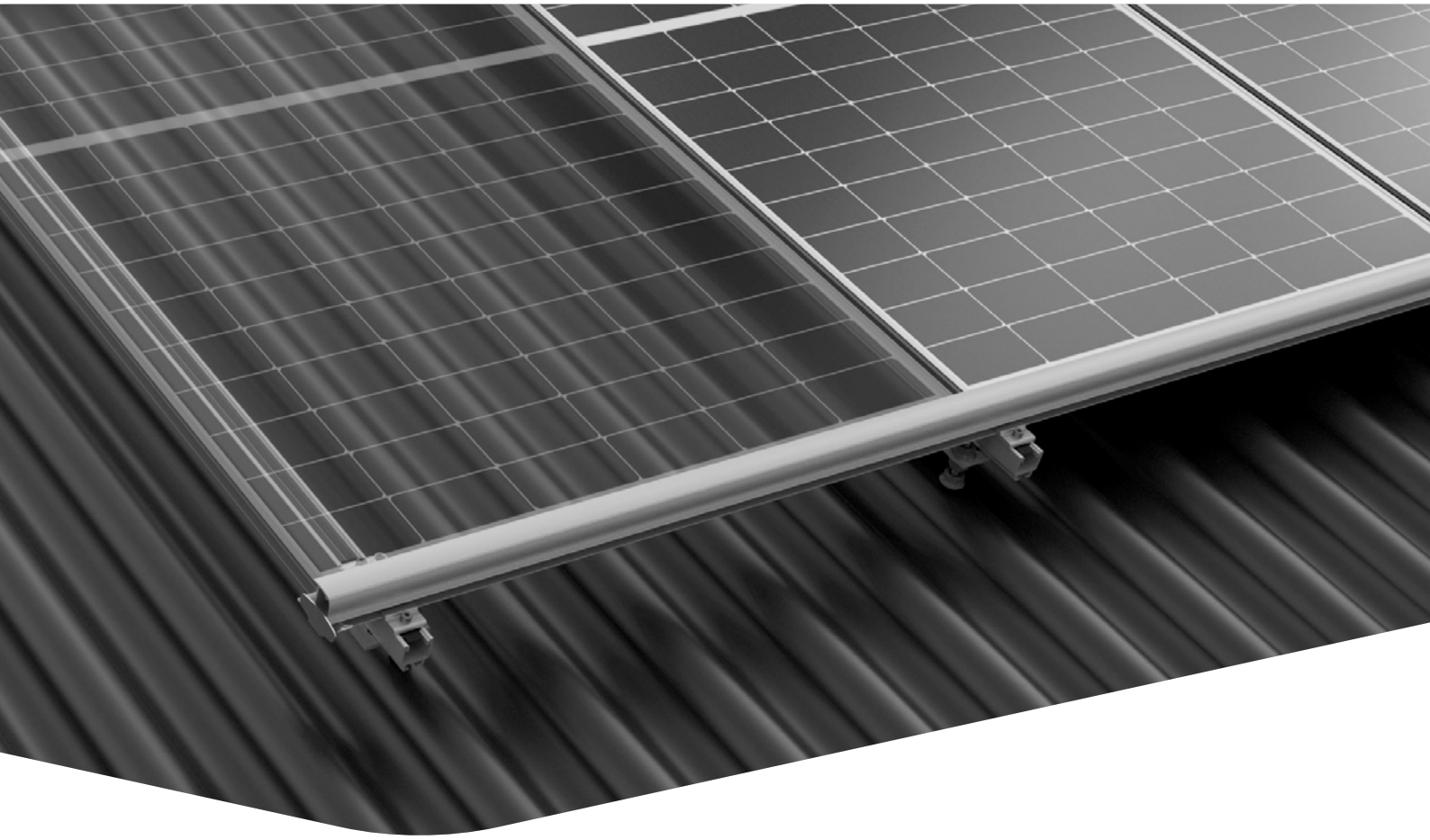

Assembly instructions

InsertionRail System

with hanger bolts / solar fasteners

Content

- **Tool overview** 3
- **General safety information** 4
- **The following guidelines apply** 5
  - Planning with K2 Base 5
  - Roof requirements 5
  - Important mounting instructions 5
- **Components** 6
  - Hanger bolts with SingleRail 6
  - Hanger bolts with SolidRail 8
  - Solar fasteners with SolidRail 10
- **Fastener** 12
  - Overview 12
  - Hanger bolts 13
  - Solar fastener 14
- **Assembly fasteners** 15
  - Module block 15
  - Pre-drilling 15
  - Fasten screws 17
  - Attach adapter plate 18
  - Mount SingleRail/SolidRail to fasteners 19
  - Connect SingleRail/SolidRail 19
- **Assembly InsertionRail** 20
  - CrossConnector T 20
  - CrossConnector 23
  - Rail connection with RailConnector 25
  - FixStop 26
  - Side guarding with EndStop part 1 27
  - Insert modules 27
  - Placement ModuleSafety 28
  - Side guarding with EndStop part 2 28
- **Equipotential bonding / module frame earthing** 29
  - TerraGrif PL 29
  - TerraGrif K2U17 29
- **Optional** 30
  - InsertionRail Cover 30
  - Cable management with Cable Manager 30
  - EndCap 31

Tested quality - multiple certifications

K2 Systems stands for secure connections, top quality and maximum precision. Our customers and business partners have known this for a long time. Independent bodies have tested, verified and certified our competencies and components.

You can find our quality and product certificates at
k2-systems.com/en/technical-information

Tool overview

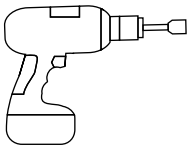



5/6 mm



7/9 mm

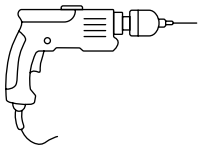



5.5 - 15 mm



6 - 35 Nm
(4.5 - 22.2 lb-ft)



4/6 mm



13/15/16/17 mm



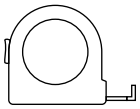

≥ 3.0 m



≥ 6.0 m

General safety information

Please note that our general mounting instructions must be followed at all times and can be viewed online at k2-systems.com

- The equipment may only be installed and operated by qualified and adequately trained installers.
- Prior to installation, ensure that the product complies with on-site static loading requirements. For roof-mounted systems, the roof load-bearing capacity must always be checked.
- National and local building regulations and environmental requirements must be adhered to.
- Compliance with health and safety regulations, accident prevention guidelines and applicable standards is required.
  - Protective equipment such as safety helmet, boots and gloves must be worn.
  - Roofing works must be in accordance with roofing regulations utilising fall protection safeguards when eaves height exceeds 3 m.
  - At least two people must be present for the duration of the installation work in order to provide rapid assistance in the event of an emergency.
- K2 mounting systems are continuously developed and improved and the installation process may thereby change at any time. Prior to installation consult our website at www.k2-systems.com/en/technical-information for up-to-date instructions. We can send you the latest version on request.
- The assembly instructions of the module manufacturer must be adhered to.
- Equipotential bonding/grounding/earthing between individual parts is to be performed according to country specific standards, as well as national laws and regulations.
- At least one copy of the assembly instructions should be available on site throughout the duration of the installation.
- Failure to adhere to our general safety and assembly instructions and not using all system components, K2 is not liable for any resulting defects or damages. We do not accept liability for any damage resulting in the use of competitor's parts. Warranty is excluded in such cases.
- K2 Systems GmbH reserves the right to exclude liability in case of disregard of our General Safety Instructions as well as in case of installation or mounting of components of a competitor.
- If all safety instructions are adhered to and the system is correctly installed, there is a product warranty entitlement of 12 years! We strongly recommend reviewing our terms of guarantee, which can be viewed at k2-systems.com/en/warranty- terms-and-conditions
  We will also send this information on request.
- Dismantling of the system is performed in reverse order to the assembly.
- K2 stainless steel components are available in different corrosion resistance classes. Each structure or component must be carefully checked for possible corrosion exposure.

The following guidelines apply

This System can be used without further testing by K2 systems in the following standard conditions. It is also suitable for higher requirements. However, if a value exceeds the standard conditions, please contact K2 Systems.

Planning with K2 Base

We recommend our free online software K2 Base for the planning. In five steps you can plan the right assembly system and get an installation recommendation, a bill of materials and the structural analysis report. Simply register and start planning: base.k2-systems.com

Roof requirements

- It is essential to check that the roof structure has sufficient residual load capacity and that the pressure capacity of the roof insulation (where present) is not exceeded.

- Roof pitch of: 5 - 75°

Important mounting instructions

- On-site general standards and regulations for lightning protection must be observed and consultation with a specialist to create a lightning protection concept is recommended (use lightning protection clamp if necessary).
- The earthing must be undertaken by the customer and must be carried out according to the respective country-specific regulations.
- After 13.6 m (vertical) and 21.0 m (horizontal) a thermal separation must be installed.
- Observe the manufacturer's instructions for installing the modules.
- Rail cut SingleRail/SolidRail ≥ 700 mm
- The SingleRail 36/50 RailConnector must always be positioned between two hanger bolts; meaning, a cantilever extension at the rail edge outside the last hanger bolt is not permitted.

Hanger bolt/solar fastener

- The hanger bolts are suitable for fastening to fibre cement profiles.
- The solar fasteners are suitable for fastening to steel/aluminium roof sheeting profiles and fibre cement profiles.
- It is also possible to install on slate roofing using metal roof plates.
- Please observe the specified screw-in depth of the solar fasteners for wooden substructures. These can be found in our Base report under the heading Results. The specified load-bearing capacity values can only be achieved if the specified screw-in depth of the solar fasteners is observed.
- Do not step on hanger bolts or solar fasteners as these are not climbing assists.
- The processing instructions and the applicable specifications from screw manufacturers' European Technical Assessment (ETA) must be observed.
- When using hanger bolts and solar fasteners, it is essential to ensure that they are installed correctly and professionally, particularly to guarantee the roof is watertight. Installation must only be carried out by qualified specialists. K2 Systems accepts no liability for damage resulting from improper installation.

InsertionRail System

- Each cut-to-size rail section (InsertionRail) must have at least 2 fastening points (vertical rails).
- Rail cut (InsertionRail) ≥ 1100 mm
- Min. 50 mm projection from the end of the rail (InsertionRail) to the outer edge of the Cross-Connector.
- 5 mm horizontal distance between the modules (ModuleSafety).

Components

Hanger bolts with SingleRail

on corrugated fibre cement

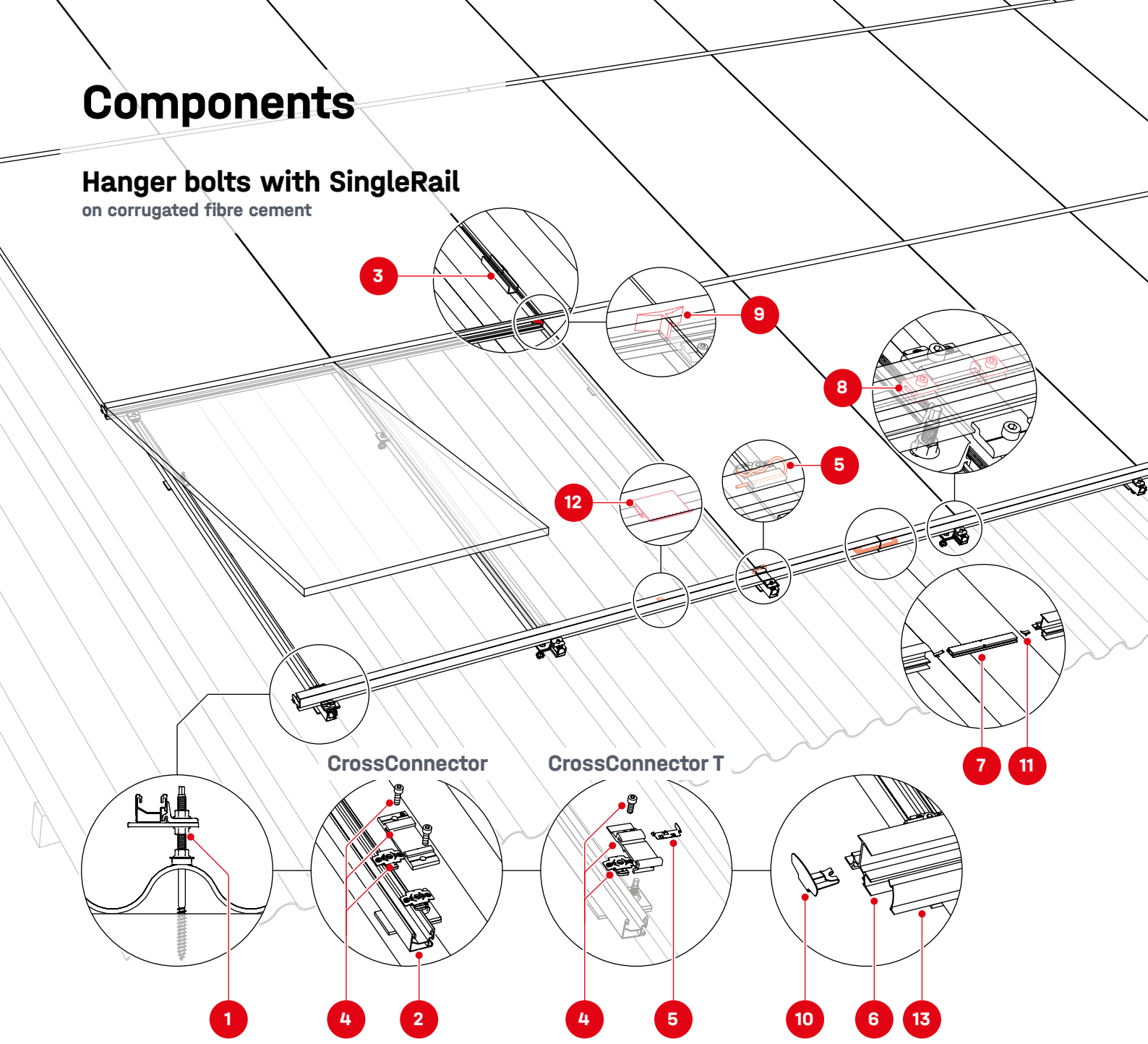

Components hanger bolts with SingleRail

1 Item number system-specific
Hanger bolt
M10/M12
for SingleRail

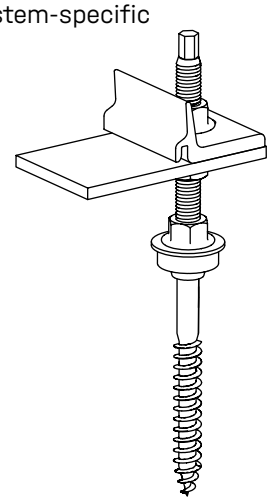

2 Item number system-specific
SingleRail 36, 50 or 36 Light

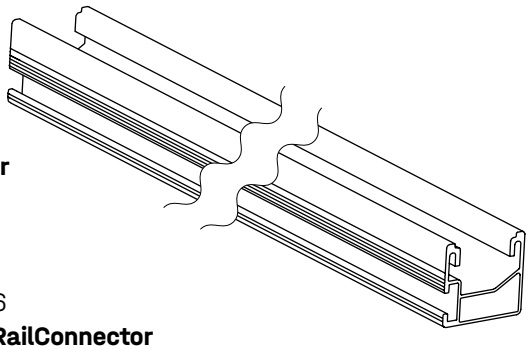

3 2003605/2001976
SingleRail 36/50 RailConnector

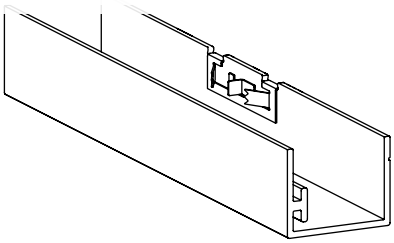

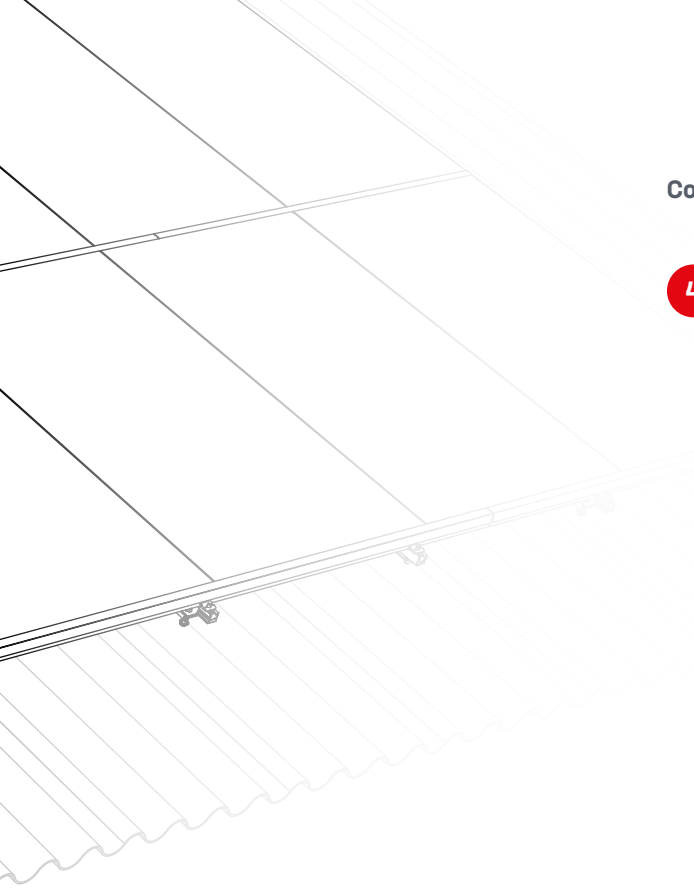

4 2004812/2004813
CrossConnector-T Set silver/black

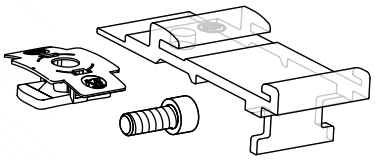

5 2004916
CrossConnector Clip



2004374/2004375
CrossConnector Set silver/black

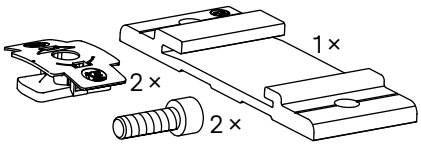

2001196
Spring plug



6 Item number system-specific
InsertionRail 2.0 silver/black

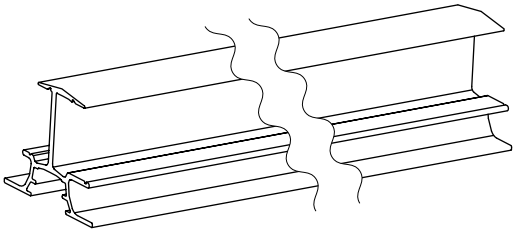

7 2004355/2004322
RailConnector silver/black

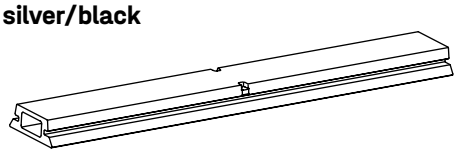

8 2004370
FixStop 2.0



9 2004290
ModuleSafety

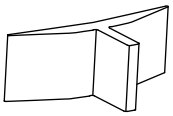

10 2004693/2004692
EndStop S silver/black



Optional

11 2004102
TerraGrif PL



12 2000056
TerraGrif K2U17



13 Item number system-specific
InsertionRail 2.0 Cover silver/black

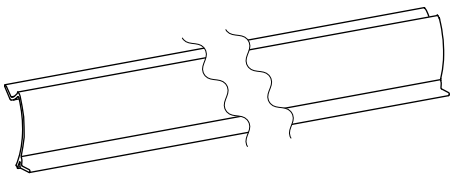

Item number system-specific
EndCap



2005041
Alpha PV-Clip



Components

Hanger bolts with SolidRail

on corrugated fibre cement

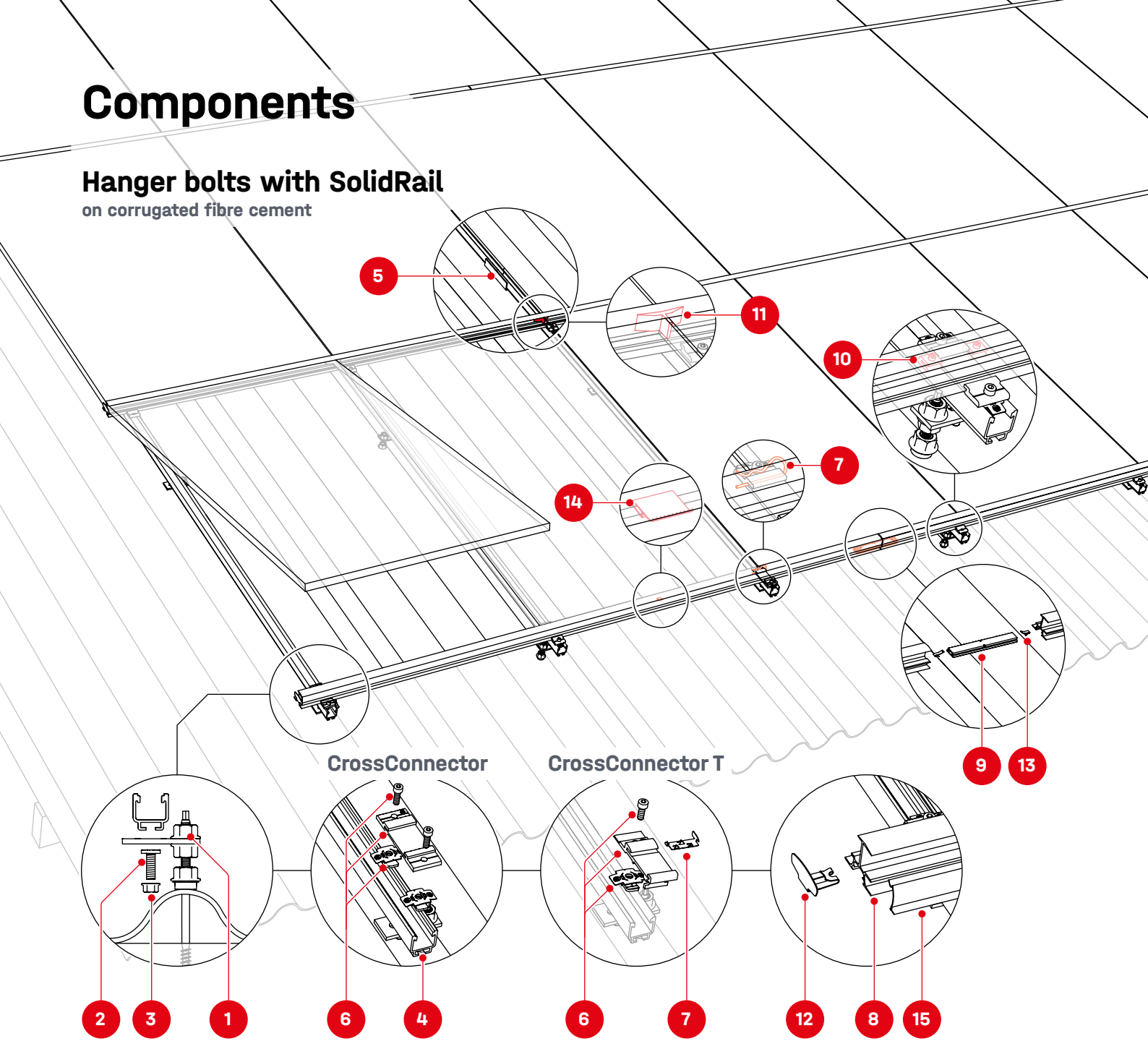

Components hanger bolts with SolidRail

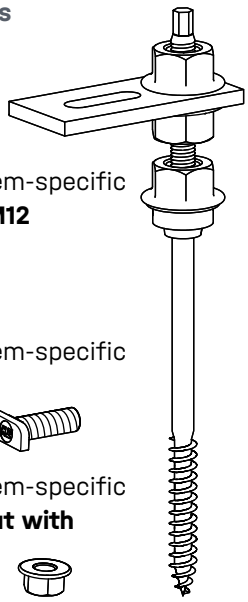

1 Item number system-specific
Hanger bolt M10/M12 for SolidRail

2 Item number system-specific
T-Bolt M10/M12

3 Item number system-specific
Hexagon Flange nut with serration M10/M12

4 Item number system-specific
SolidRail

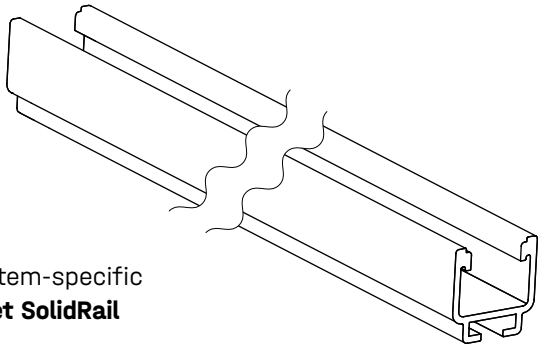

5 Item number system-specific
Rail connector Set SolidRail

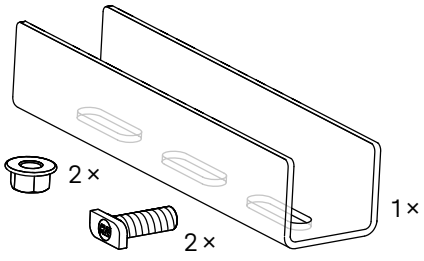

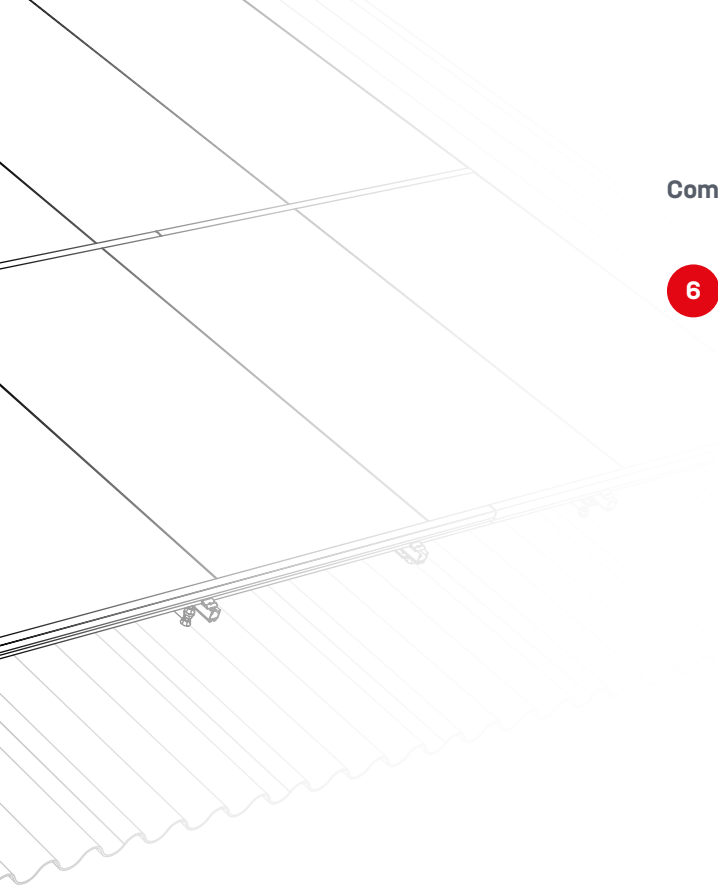

6 2004812/2004813
CrossConnector-T Set silver/black

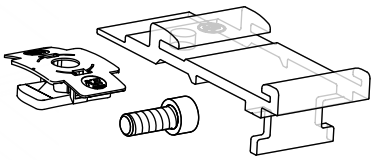

7 2004916
CrossConnector Clip



2004374/2004375
CrossConnector Set silver/black

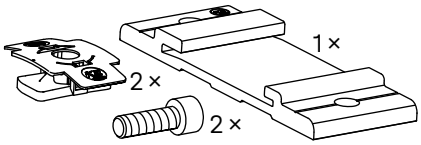

2001196
Spring plug



8 Item number system-specific
InsertionRail 2.0 silver/black

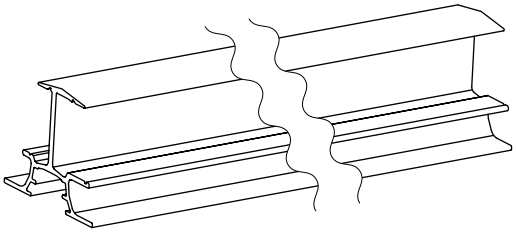

9 2004355/2004322
RailConnector silver/black

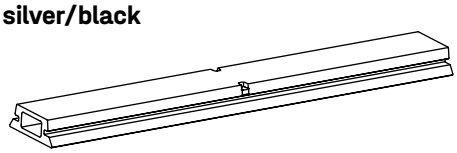

10 2004370
FixStop 2.0



11 2004290
ModuleSafety

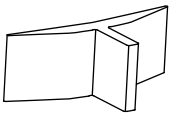

12 2004693/2004692
EndStop S silver/black



Optional

14 2004102
TerraGrif PL

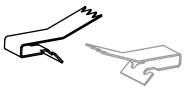

15 2000056
TerraGrif K2U17



16 Item number system-specific
InsertionRail 2.0 Cover silver/black

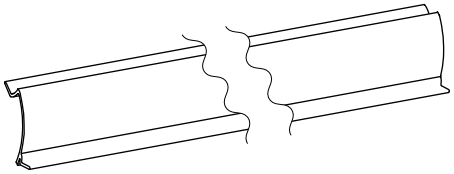

Item number system-specific
EndCap



2005041
Alpha PV-Clip



Components

Solar fasteners with SolidRail

on trapezoidal sheet metal, sandwich panels, corrugated sheet metal and corrugated fibre cement

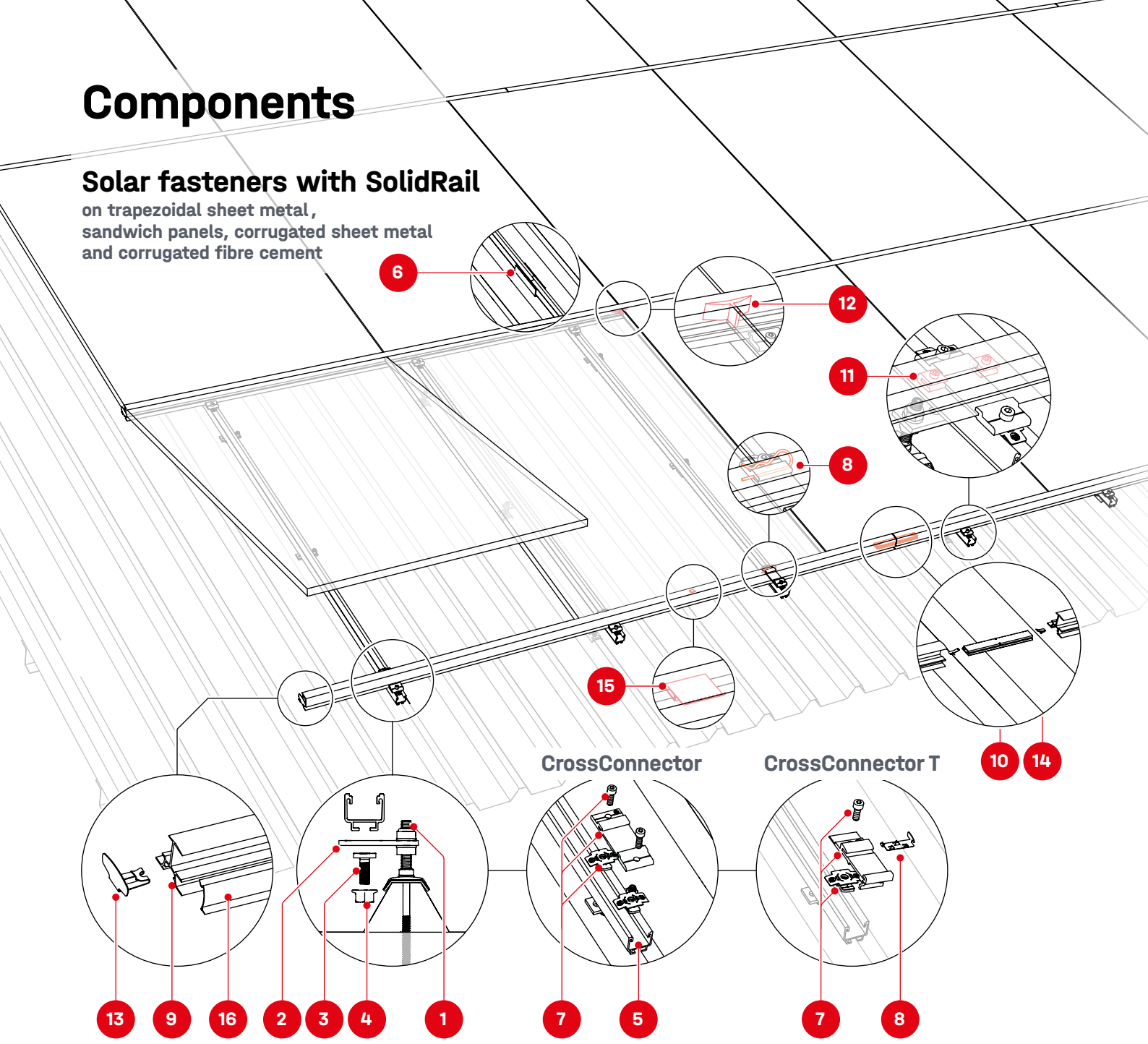

Components solar fasteners with SolidRail

1 Item number system-specific
Solar fasteners M10 for SolidRail
Calotte also available for corrugated sheet metal

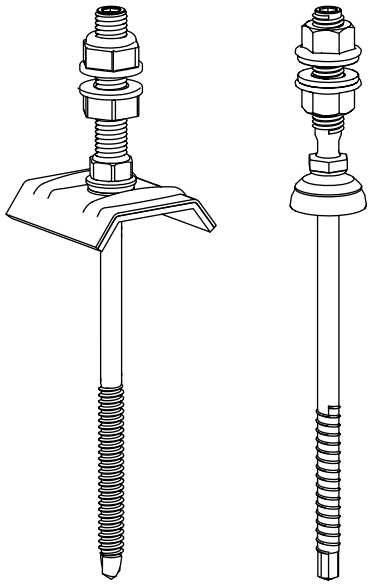

2 2002544
Adapter plate M10

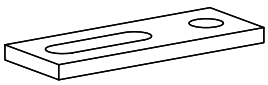

3 1000571
T-Bolt M10



4 1000042
Hexagon Flange nut with serration M10



5 Item number system-specific
SolidRail

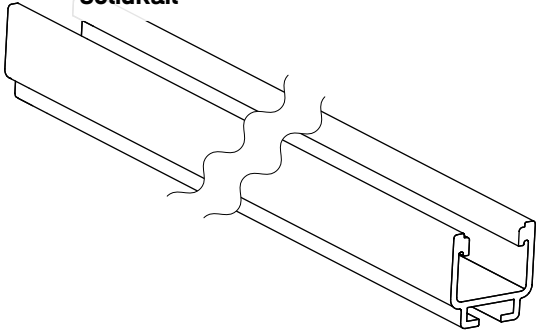

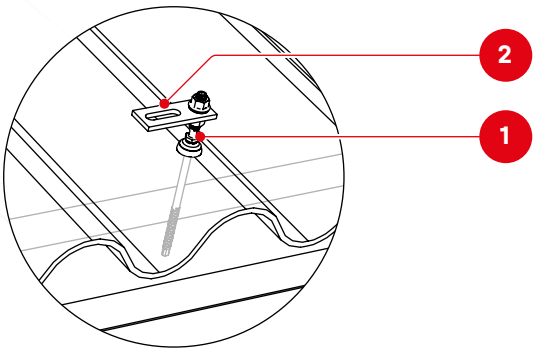

6 Item number system-specific
Rail connector Set SolidRail

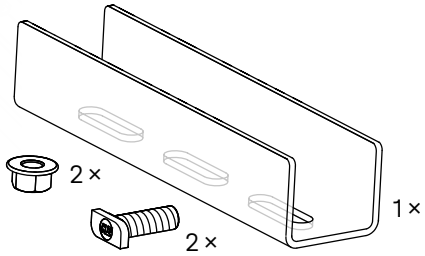

7 2004812/2004813
CrossConnector-T Set silver/black

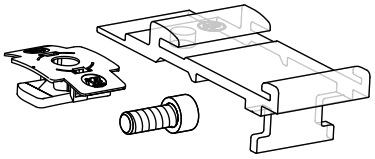

2004374/2004375
CrossConnector Set silver/black

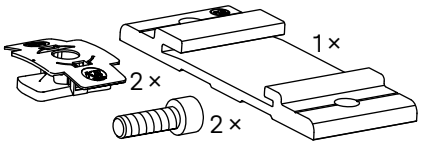

8 2004916
CrossConnector Clip



2001196
Spring plug



9 Item number system-specific
InsertionRail 2.0 silver/black

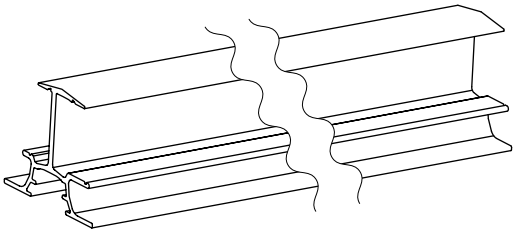

10 2004355/2004322
RailConnector silver/black

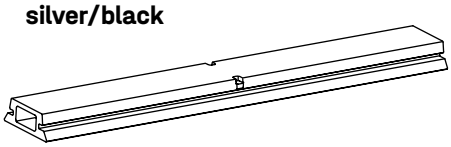

11 2004370
FixStop 2.0



12 2004290
ModuleSafety

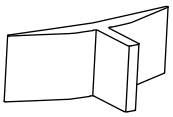

13 2004693/2004692
EndStop S silver/black



Optional

14 2004102
TerraGrif PL



15 2000056
TerraGrif K2U17



16 Item number system-specific
InsertionRail 2.0 Cover silver/black

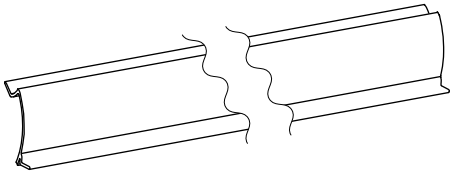

Item number system-specific
EndCap



2005041
Alpha PV-Clip



Fastener

Overview

Fastener	Roof covering	Illustration	Substructure		
			Timber		
			Total length [mm] / Product number		
			M10	M12	
Hanger bolt SingleRail with fibre cement seal	Corrugated fibre cement 	①	**180 /** 2003272	**200 /** 2003275	
			200 / 2003273	**250 /** 2003276	
			250 / 2003274	**300 /** 2003277	
Hanger bolt SolidRail with fibre cement seal	Corrugated fibre cement 	②	**180 /** 2000120	**200 /** 2000123	
			200 / 2000121	**250 /** 2000124	
			250 / 2000122	**300 /** 2000125	

			Timber		Steel	
			Screw length [mm] / Product no.		Screw length [mm] / Product no.	
			M10 × 50	M10 × 70	M10 × 50	M10 × 70
Solar fastener with calotte (trapezoidal/ corrugated)	Trapezoidal sheet metal, sandwich panels, corrugated sheet metal 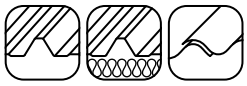	③ ④	**80 /** 1002228	**80 /** 1004286	**85 /** 2003018	**85 /** 2003032
			100 / 1001770	**100 /** 1006125	**115 /** 2003019	**115 /** 2003033
			130 / 1001511	**200 /** 1005906	**155 /** 2003020	**155 /** 2003034
			150 / 1000807		**195 /** 2003021	**195 /** 2003035
			180 / 1001627			
			200 / 1002749			
Solar fastener with fibre-cement seal	Corrugated fibre cement 	⑤ ⑥	**80 /** 1002130	**130 /** 1006058	**85 /** 2003013	**85 /** 2003028
			100 / 1003029	**150 /** 1005263	**115 /** 2003012	**115 /** 2003029
			130 / 1001759	**200 /** 1001420	**155 /** 2003016	**155 /** 2003030
			150 / 1002001		**195 /** 2003017	**195 /** 2003031
			180 / 1002533			

Hanger bolts

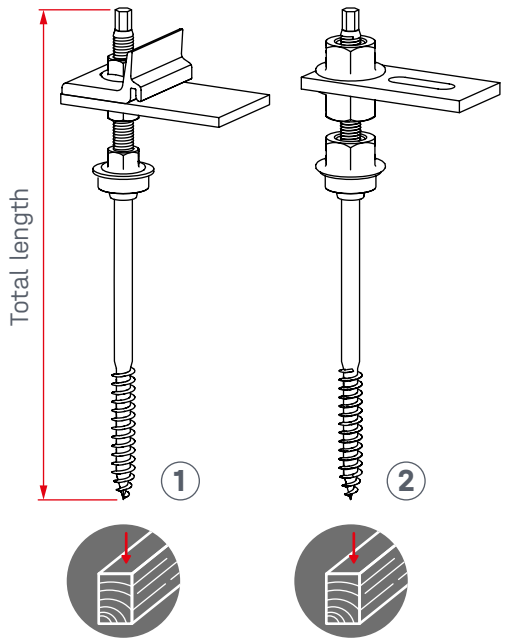

Solar fasteners

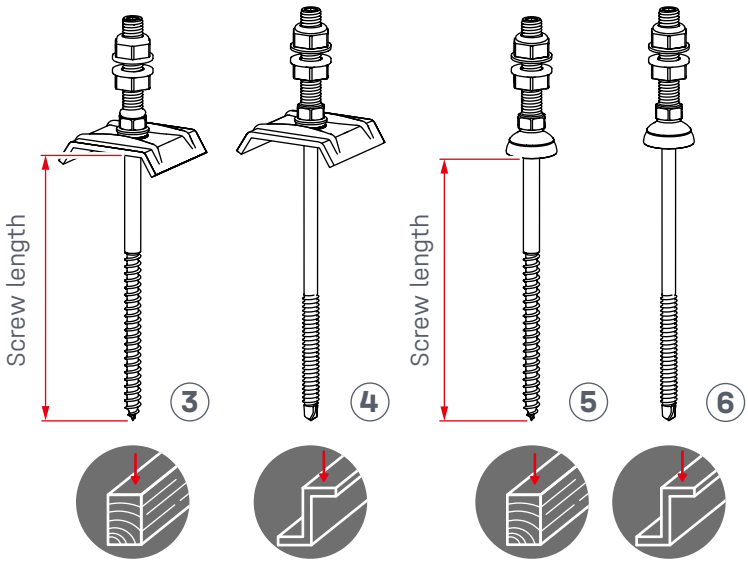

Hanger bolts

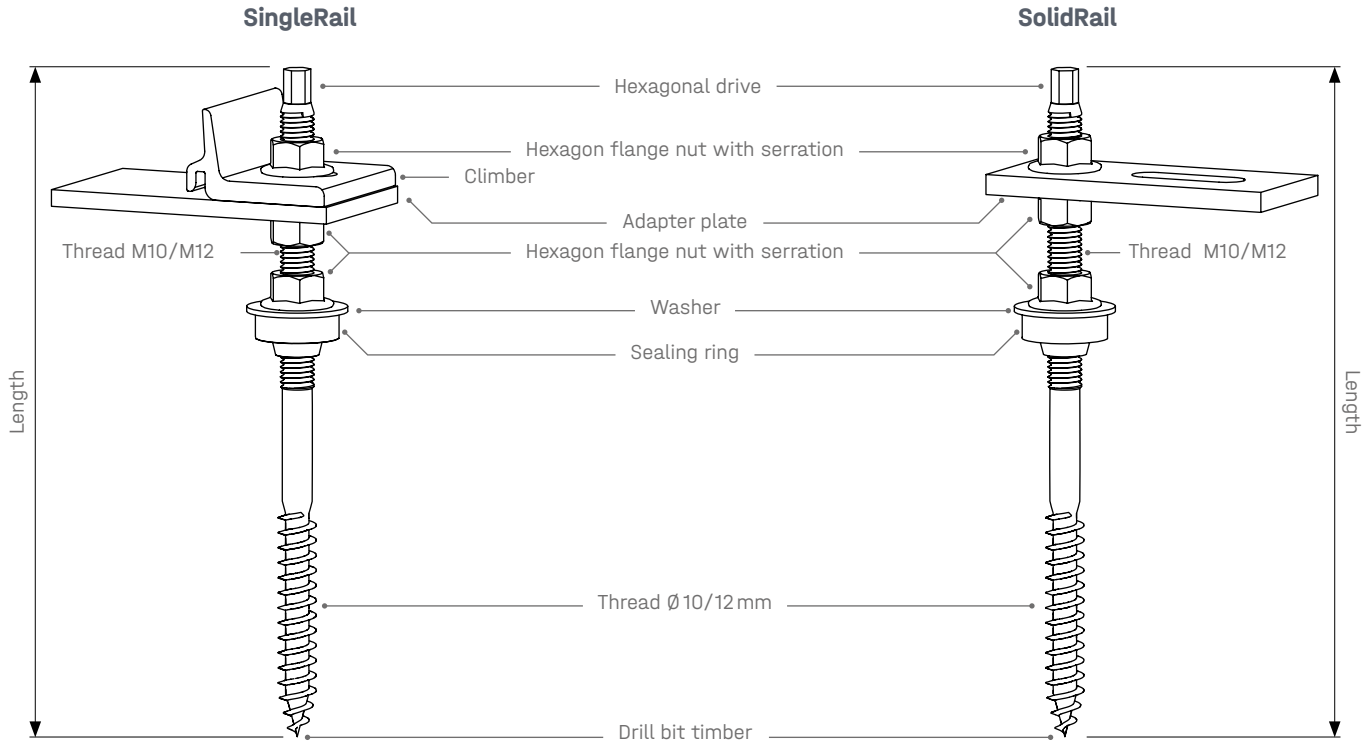

Roof covering, fastener types and pre-drilling diameters

Pre-drill level		Material	Pre-drilling diameters [mm]	
1	Substructure	**Timber**	**M10**	7.0
			M12	8.5
2	Roof covering	**Corrugated fibre cement**	**M10**	14.0
			M12	15.0

1 2 = Sequence of pre-drilling, see step 1b on page 16

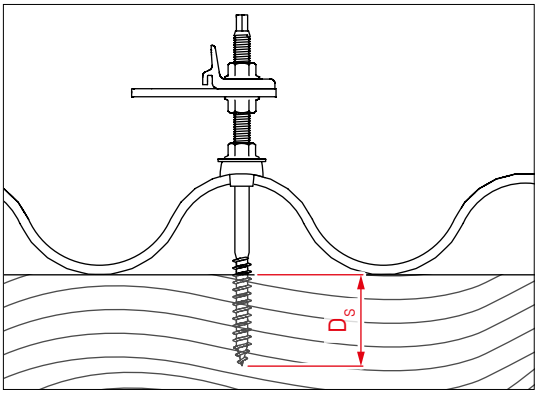

Observe minimum screw-in depth D_S
M10 = ≥ 40 mm / M12 = ≥ 48 mm, see also "Calculation hanger bolt and solar fastener length" document.

Solar fastener

Trapezoidal sheet metal / sandwich panels / corrugated sheet metal **Corrugated fibre cement**

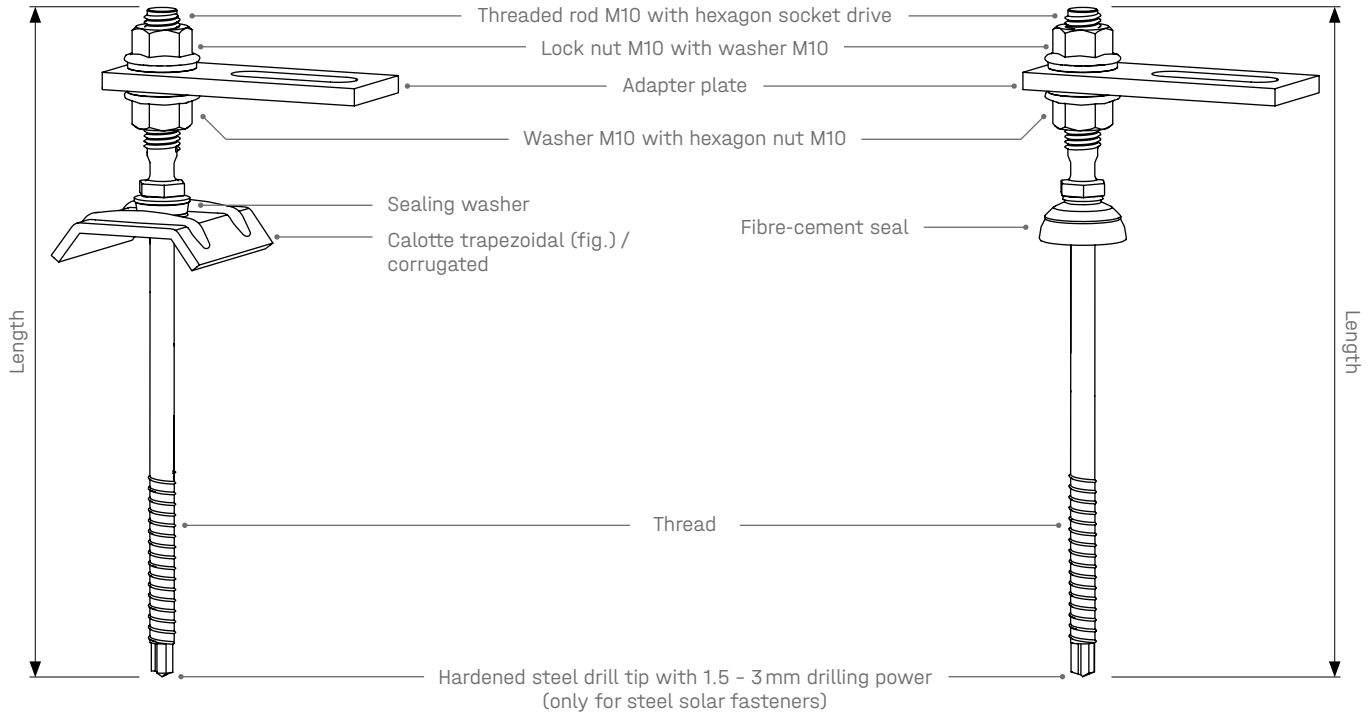

The solar fasteners are available for different substructure materials (steel or timber). They differ in terms of **thread, sealing screw** and **drill tip**.

Roof coverings, fastener types and pre-drilling diameters

Pre-drilled level	Material	Ø Pre-drilling diameters [mm] Solar fastener Ø 8.0 mm					
		Substr. Steel *					Substr. Timber**
Roof covering	**Corrugated fibre cement**	**11.0**					
Roof covering	**Trapezoidal sheet metal/ corrugated sheet metal/ sandwich panels**	**Roof covering and Substructure identical**					**5.5**
Substructure (Substr.)	**Steel/Timber**	**Material thickness [mm]**					
		1.5 - 3.0	3.0 - 5.0	5.0 - 7.5	7.5 - 10.0	> 10.0	
		none	**6.8**	**7.0**	**7.2**	**7.4**	**5.5**

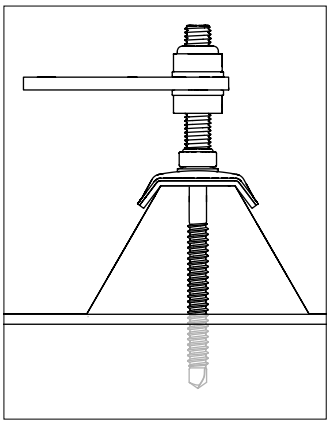

* Minimum screw-in depth steel: at least three complete threads through the profile - the drill tip must penetrate the steel beam, see also "Calculation hanger bolt and solar fastener length" document.

** Minimum screw-in depth timber: ≥ 32 mm,
see also "Calculation hanger bolt and solar fastener length" document.

Assembly fasteners

Module block

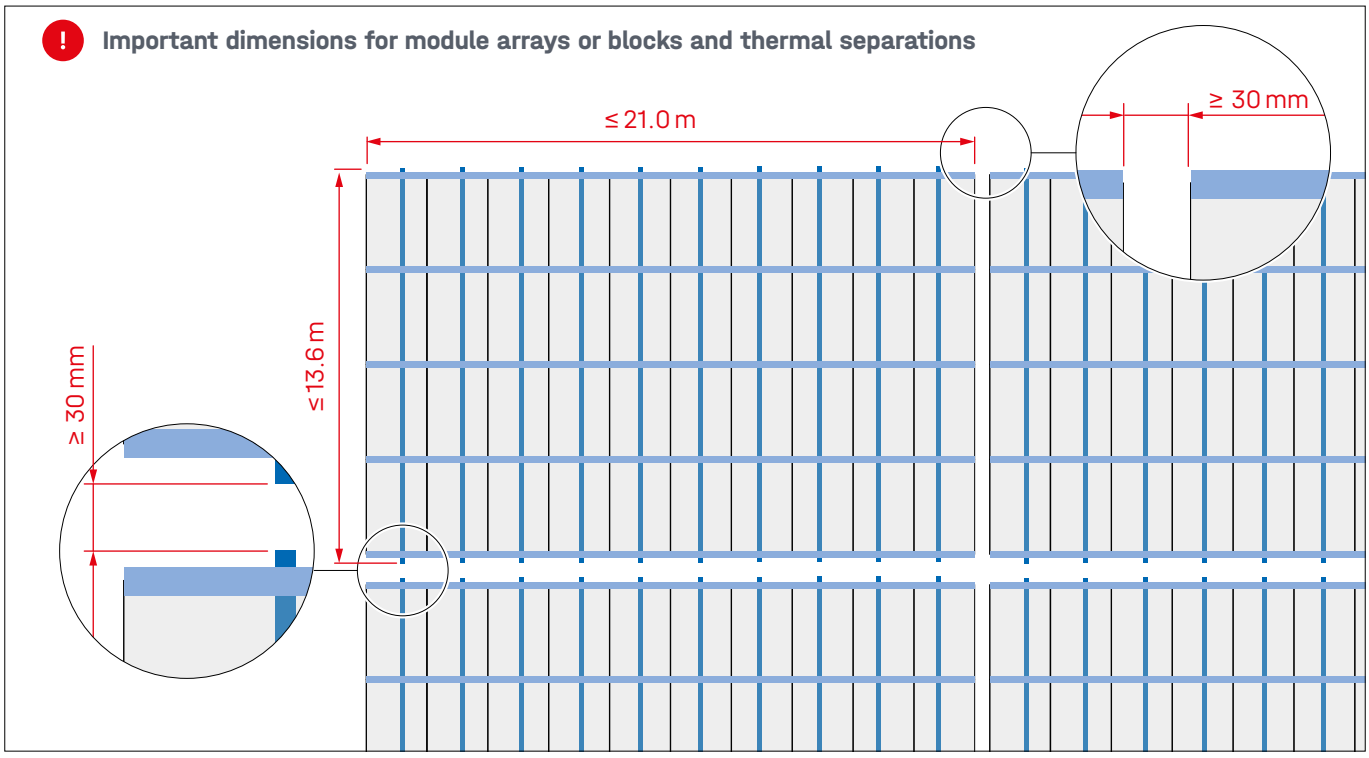

Pre-drilling

1a

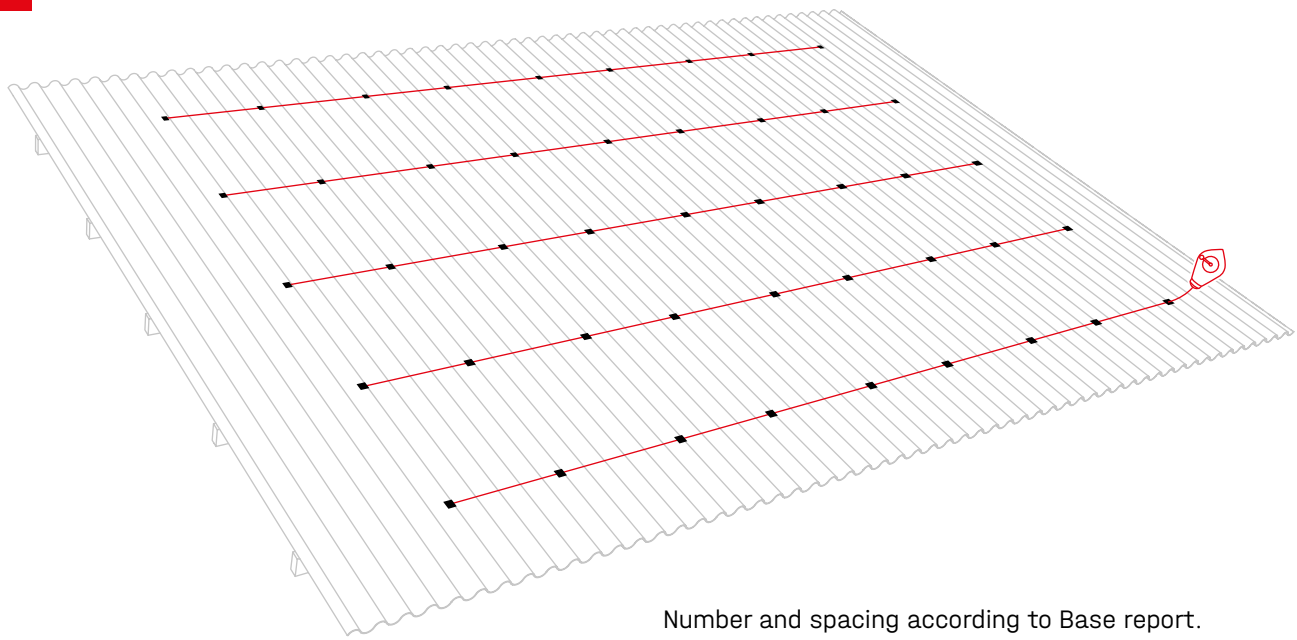

Number and spacing according to Base report.

Hanger bolt

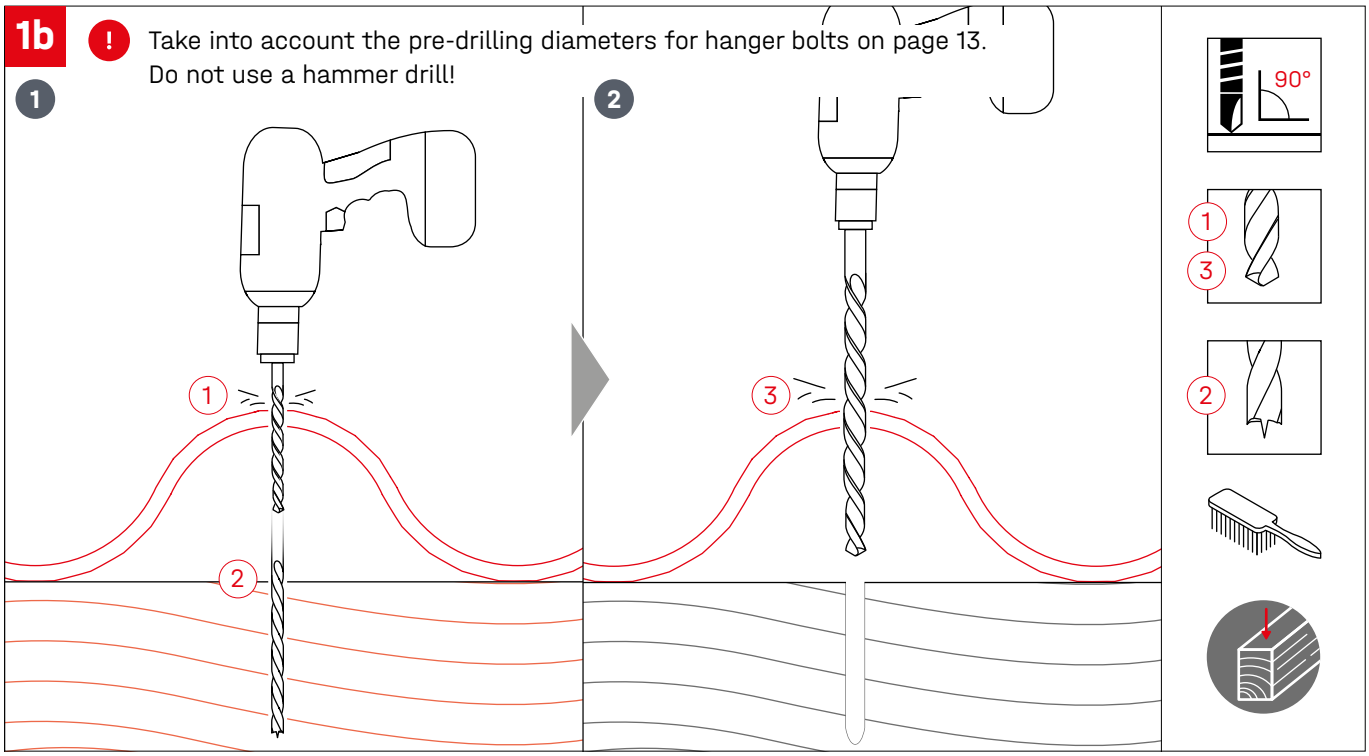

Solar fastener

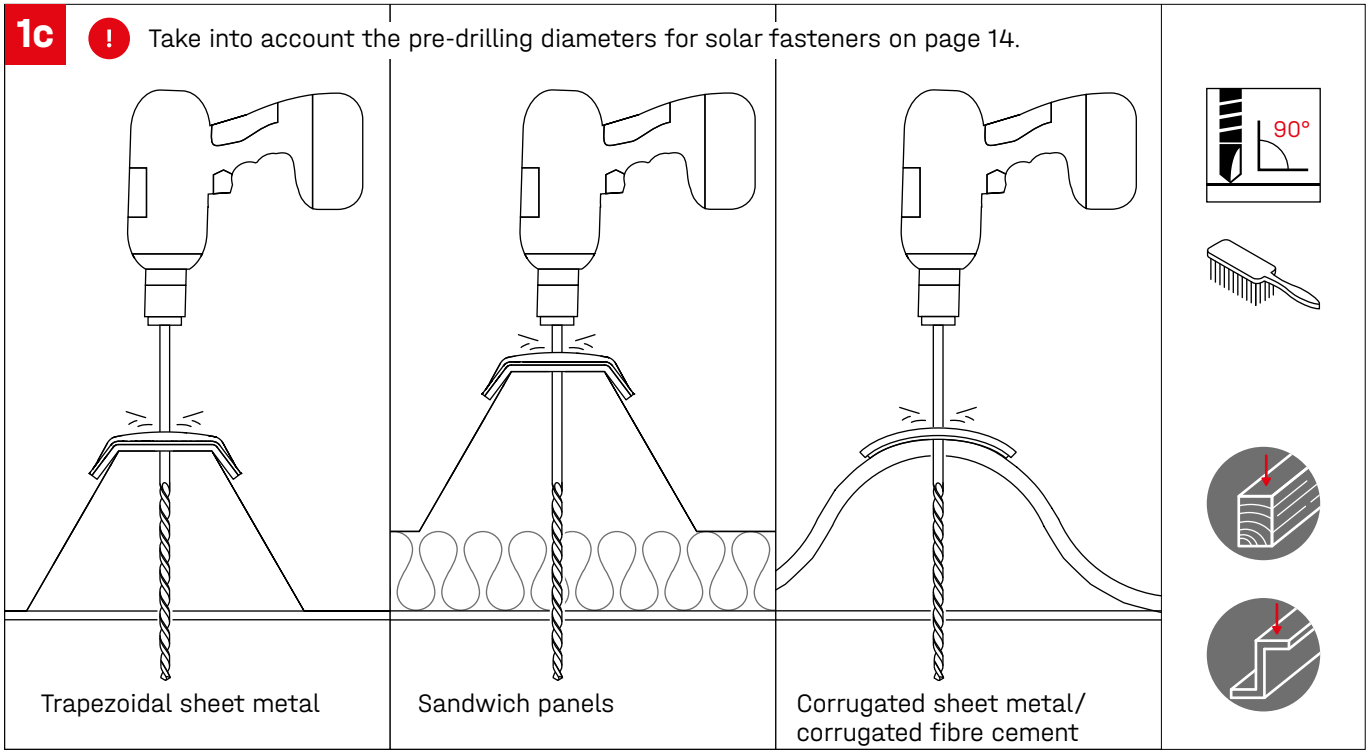

Fasten screws

2a Hanger bolt

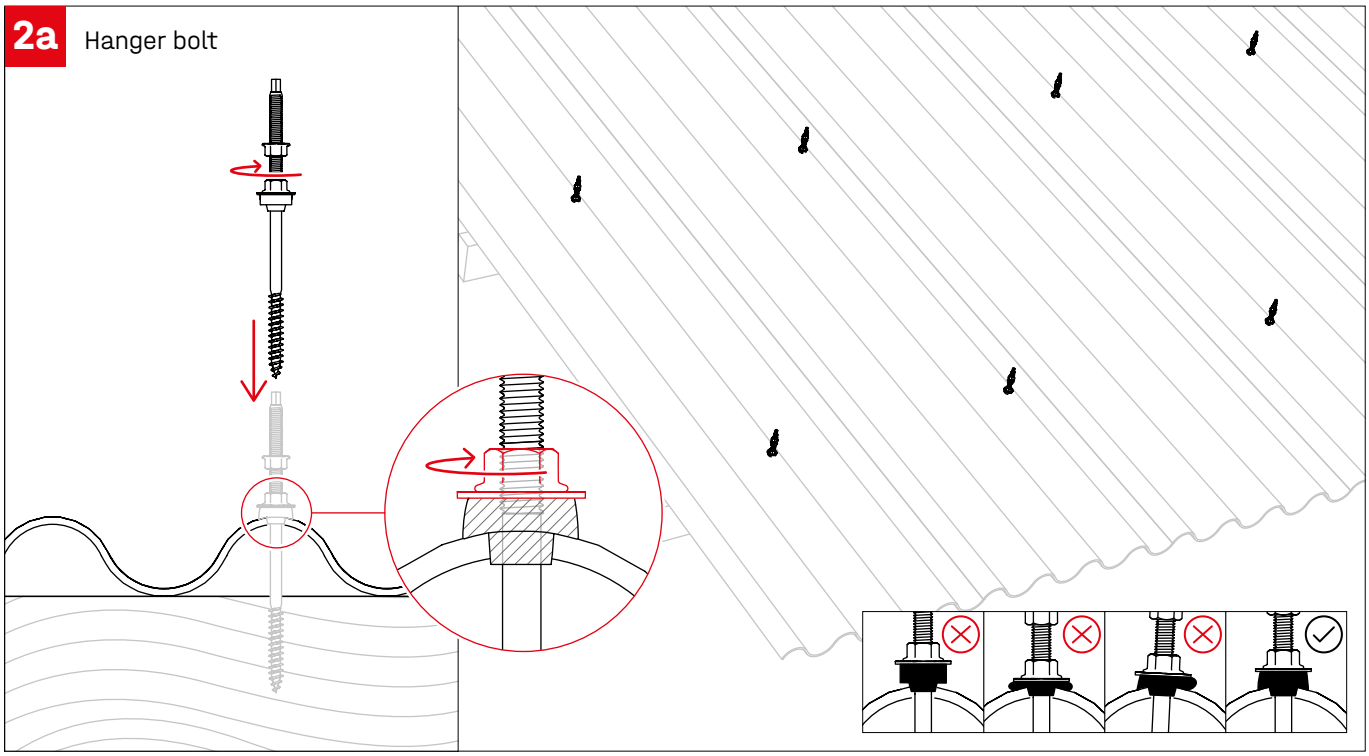

2b Solar fastener with calotte (trapezoidal/corrugated)

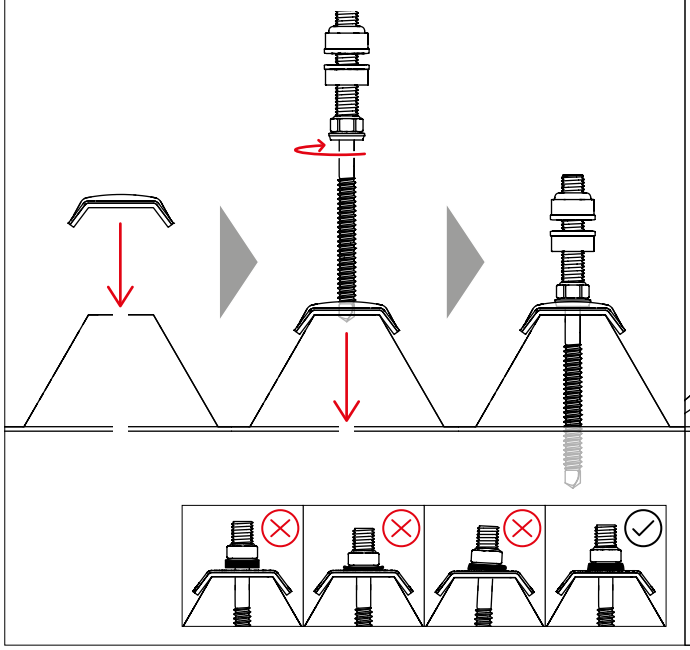

Solar fastener with fibre-cement seal

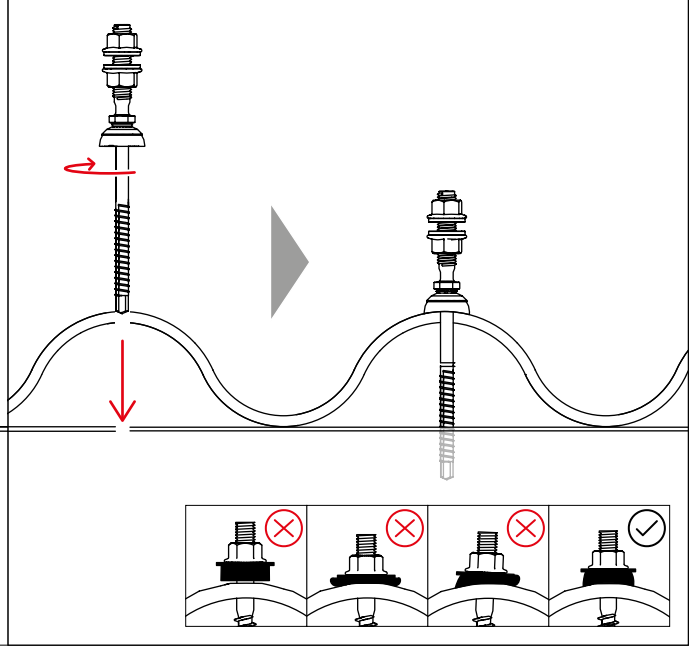

Attach adapter plate

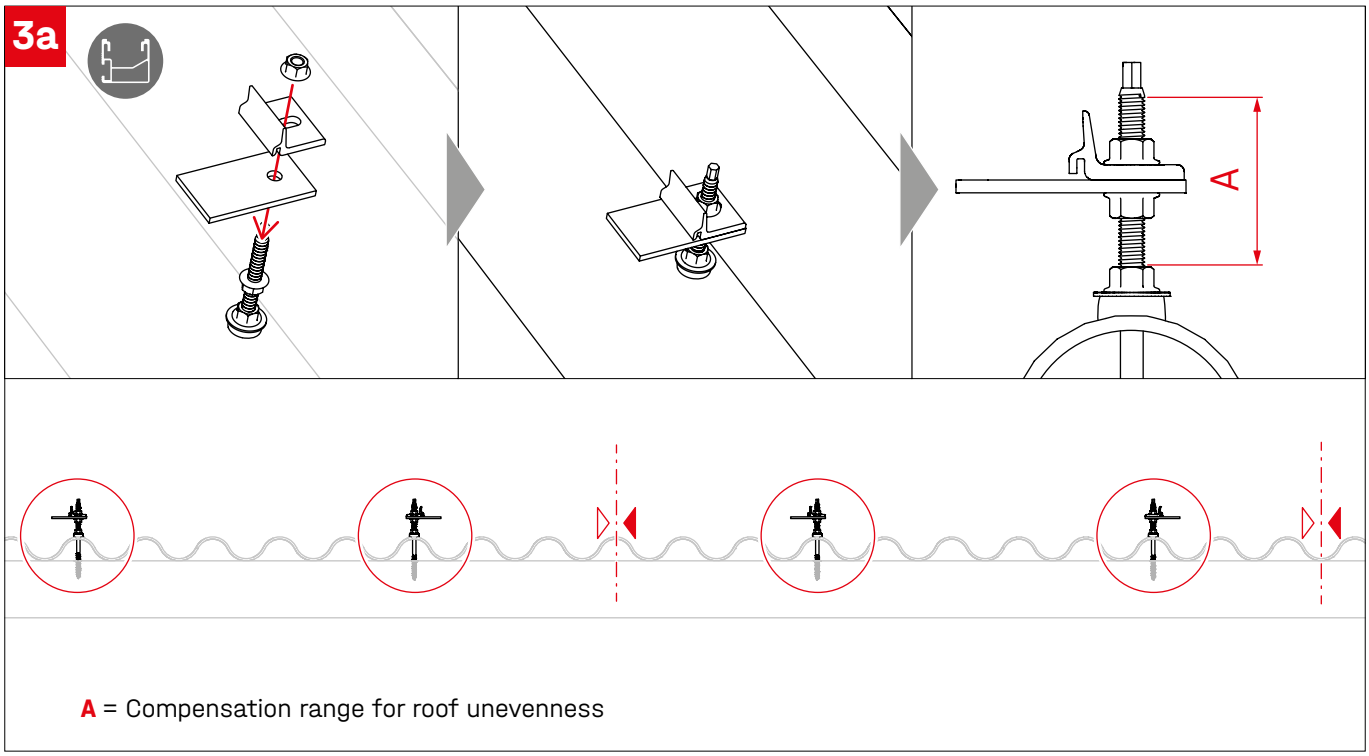

A = Compensation range for roof unevenness

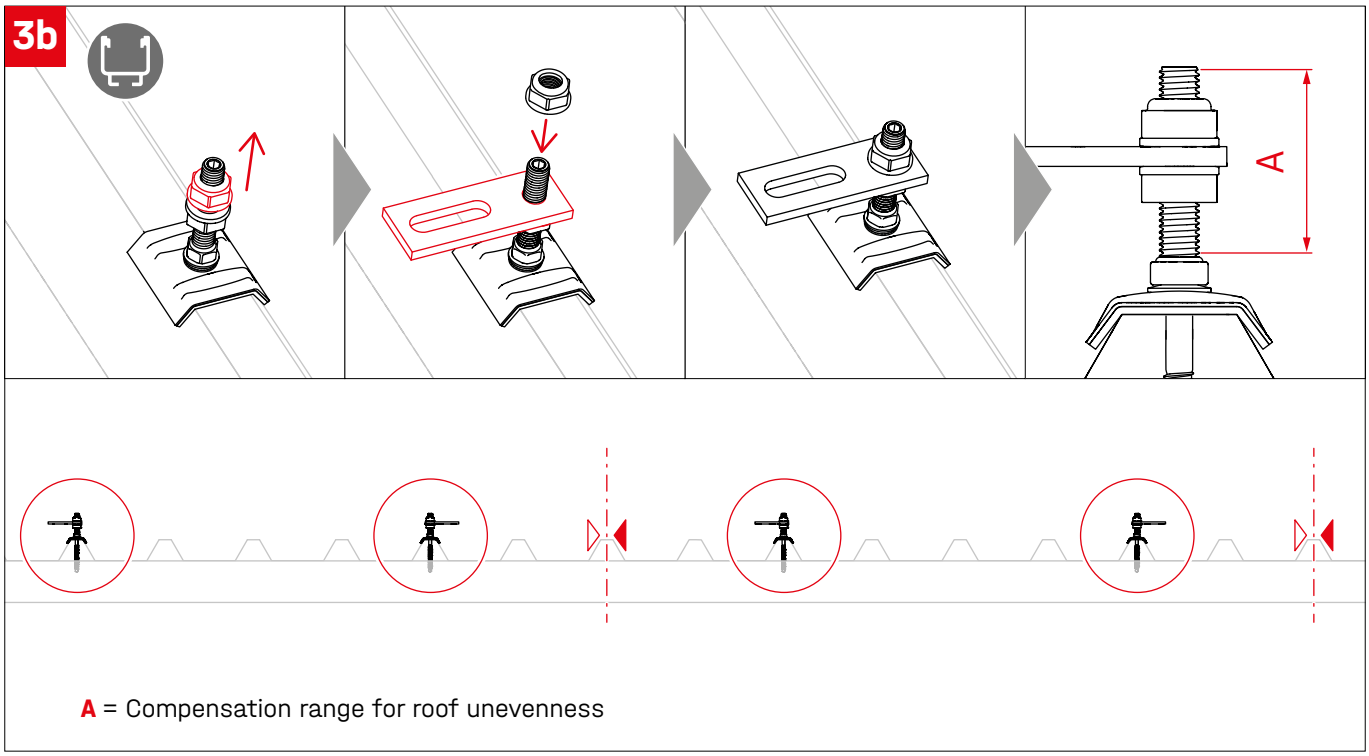

A = Compensation range for roof unevenness

Mount SingleRail/SolidRail to fasteners

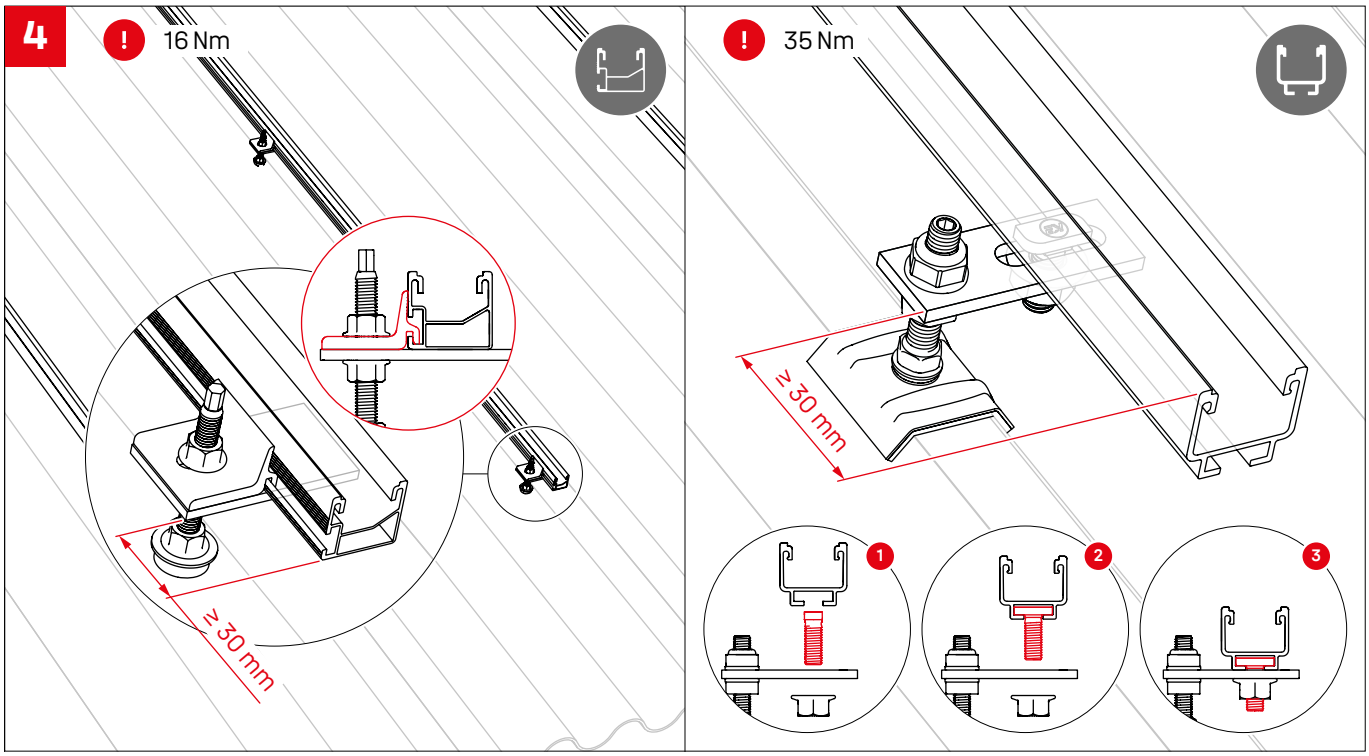

Connect SingleRail/SolidRail

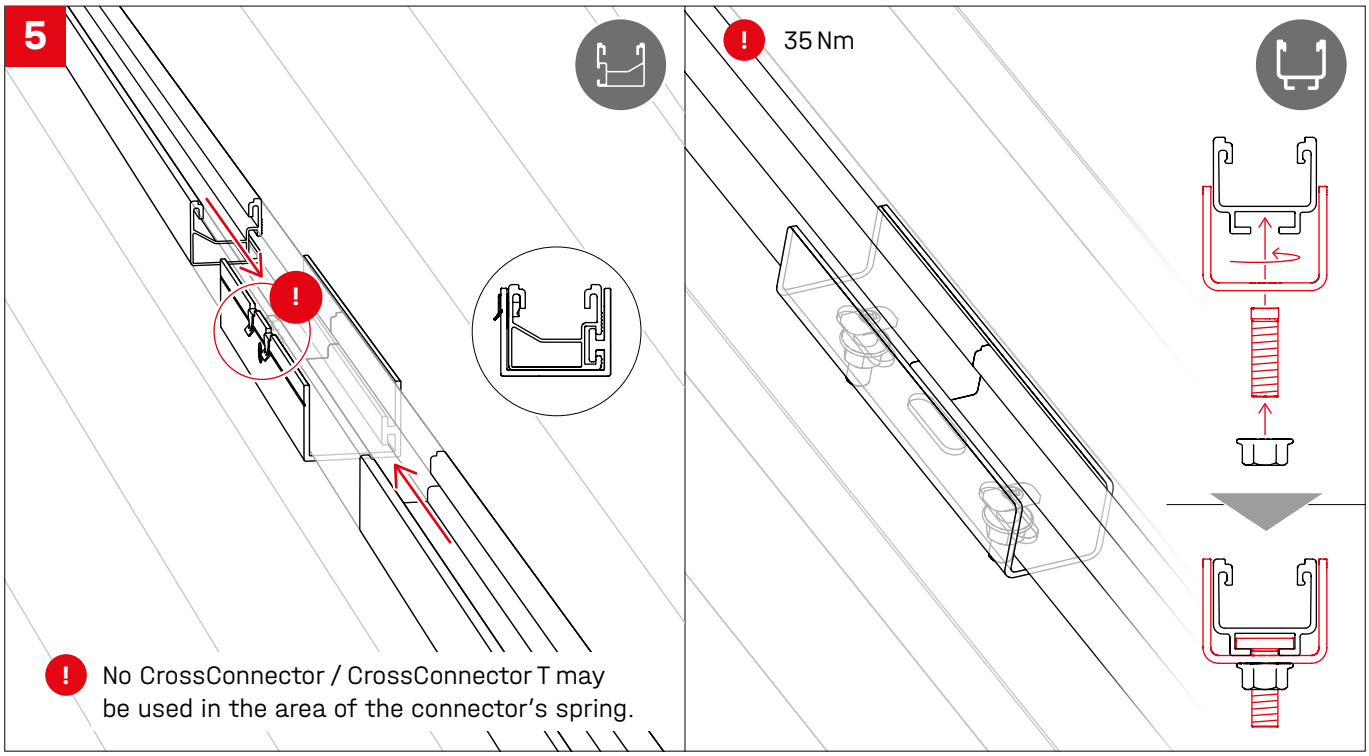

Assembly InsertionRail

CrossConnector T

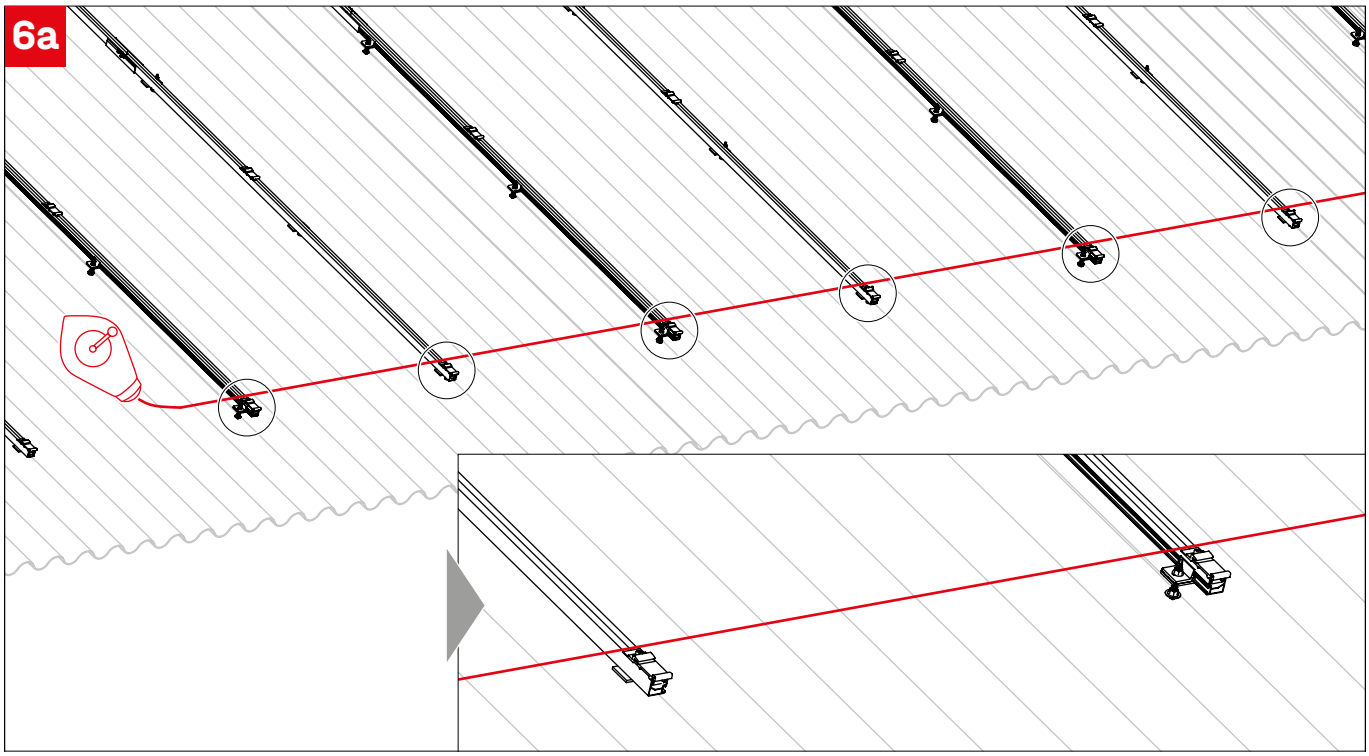

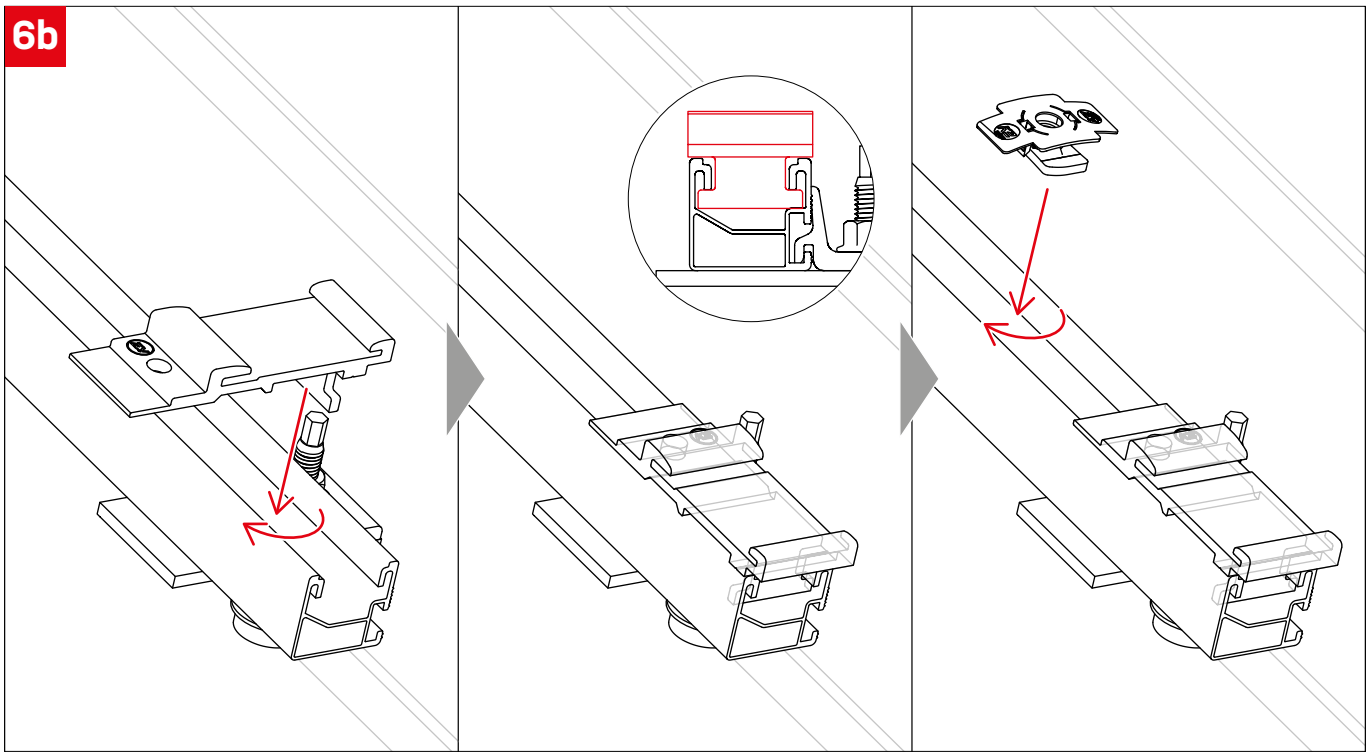

6c

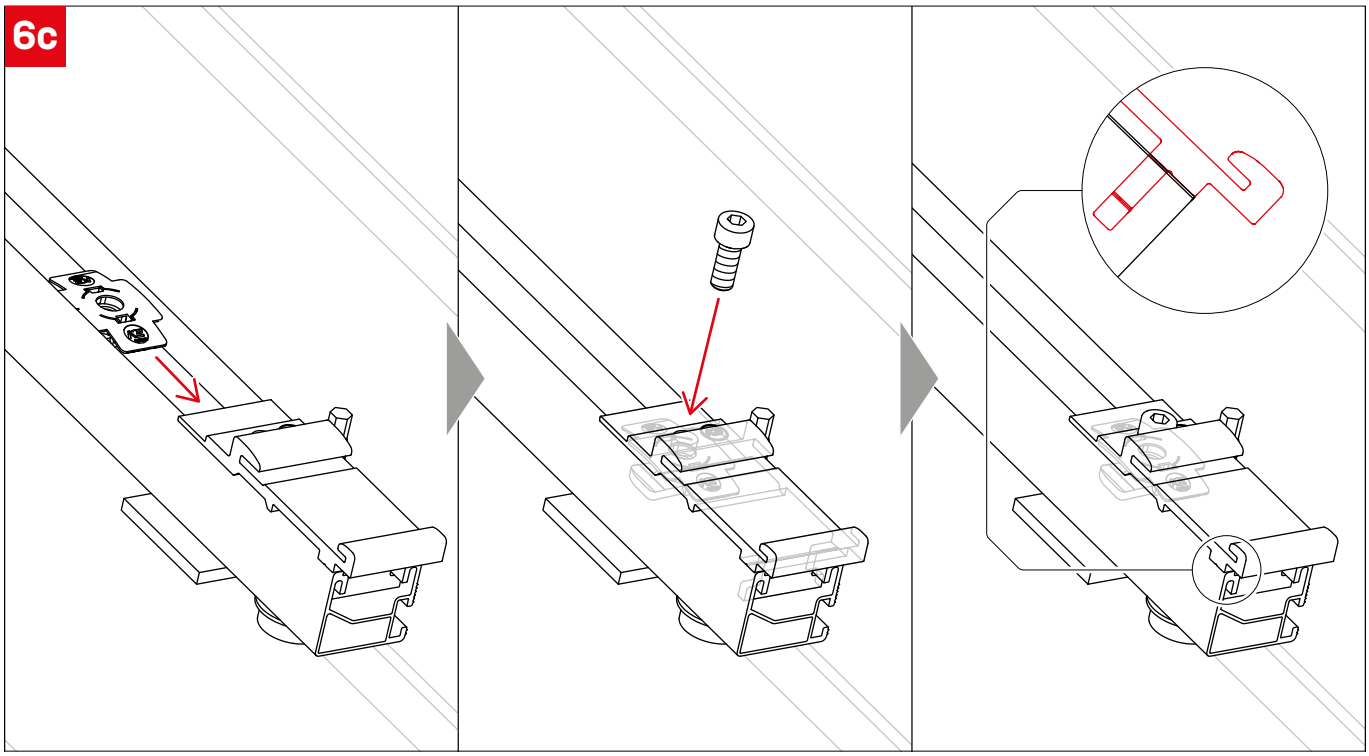

6d Vertical distance CrossConnectors T

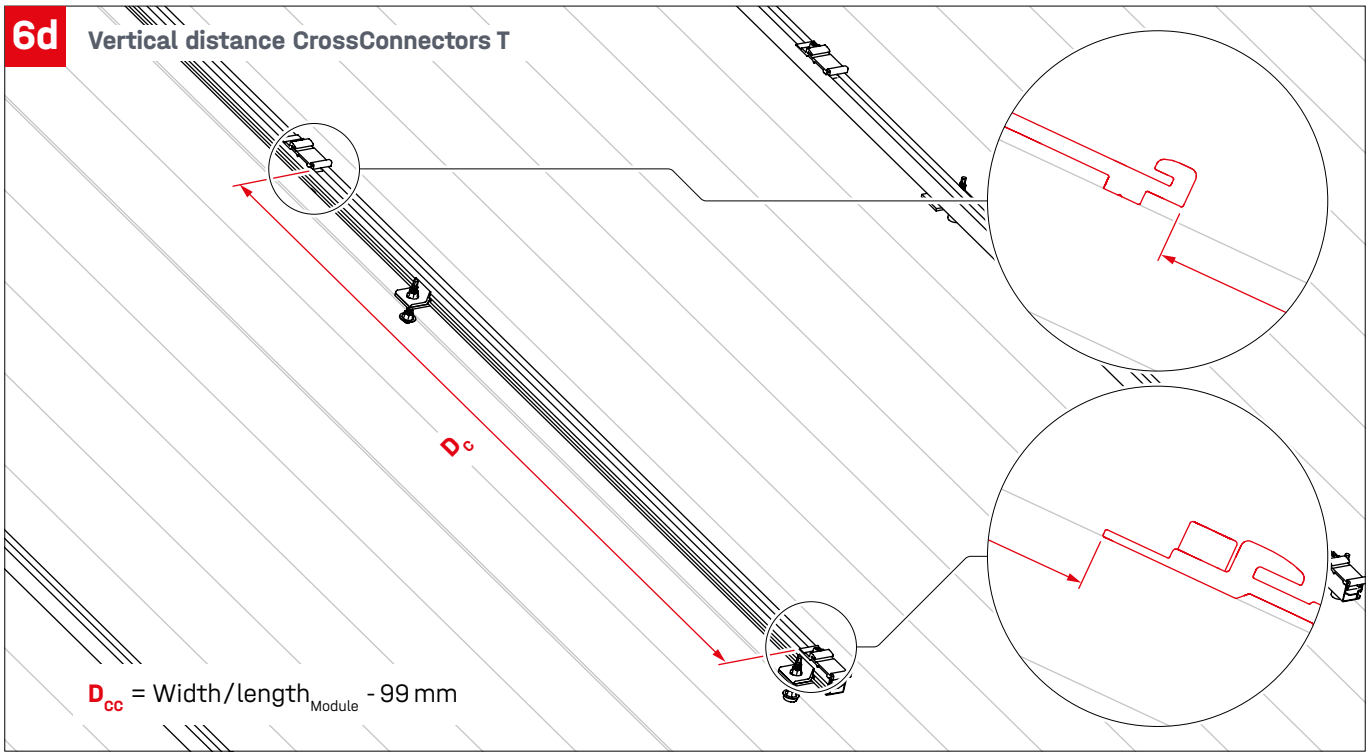

6e Insert InsertionRail

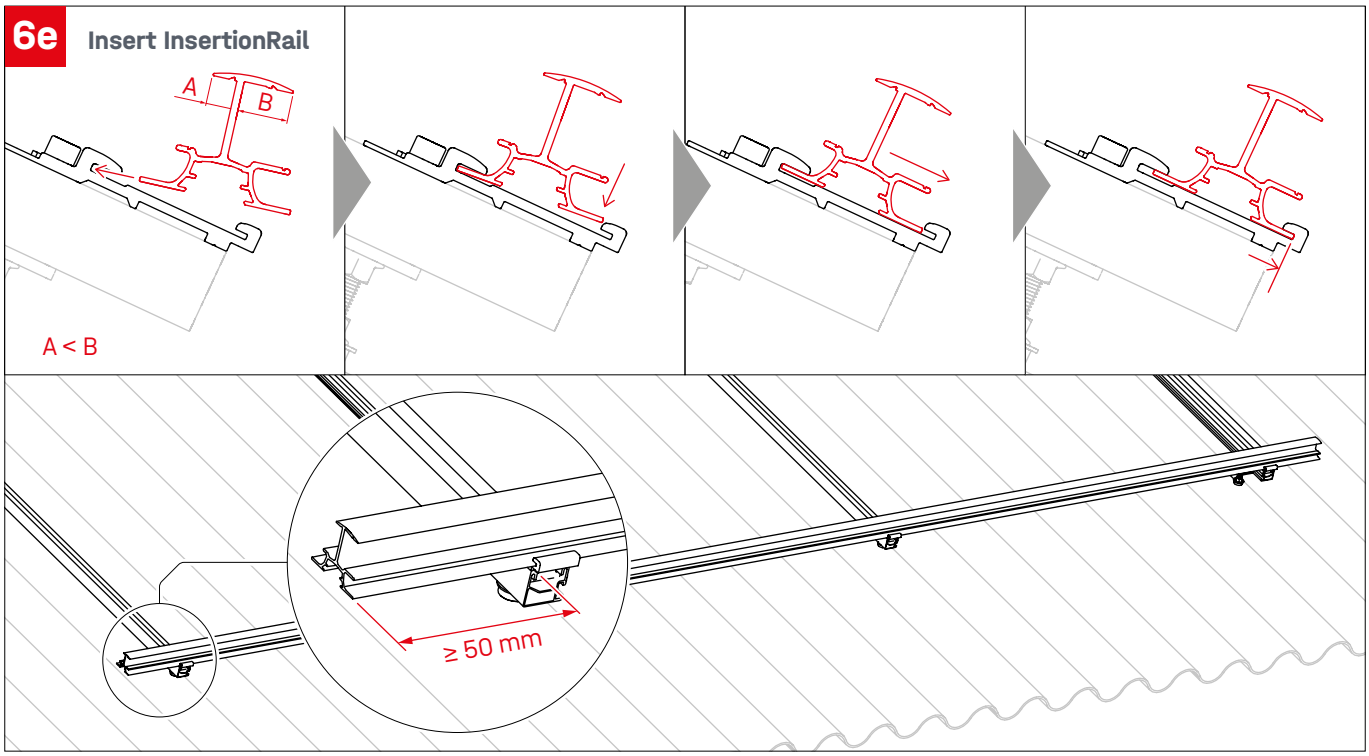

6f CrossConnector Clip

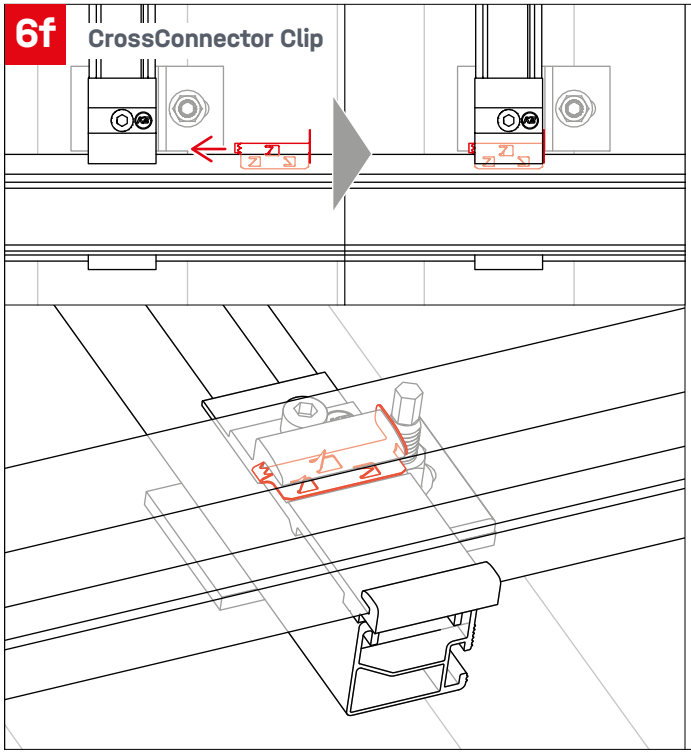

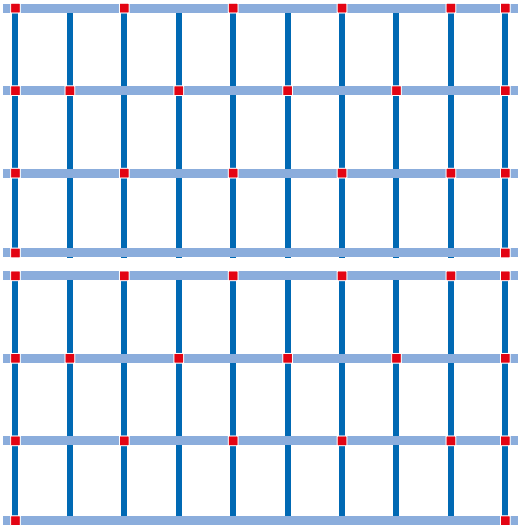

! To secure the InsertionRail, attach a CrossConnector Clip ■ to each outer CrossConnector. Starting from the second row, to every second CrossConnector.

CrossConnector

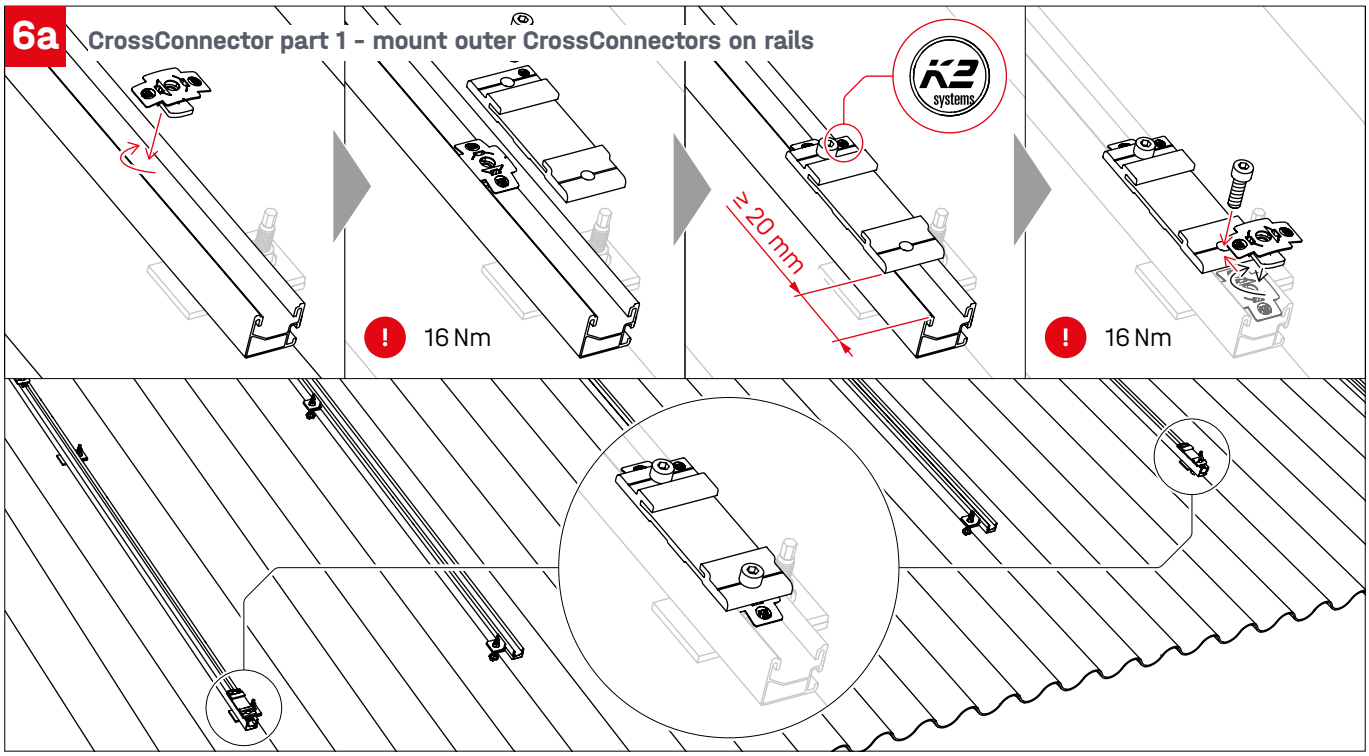

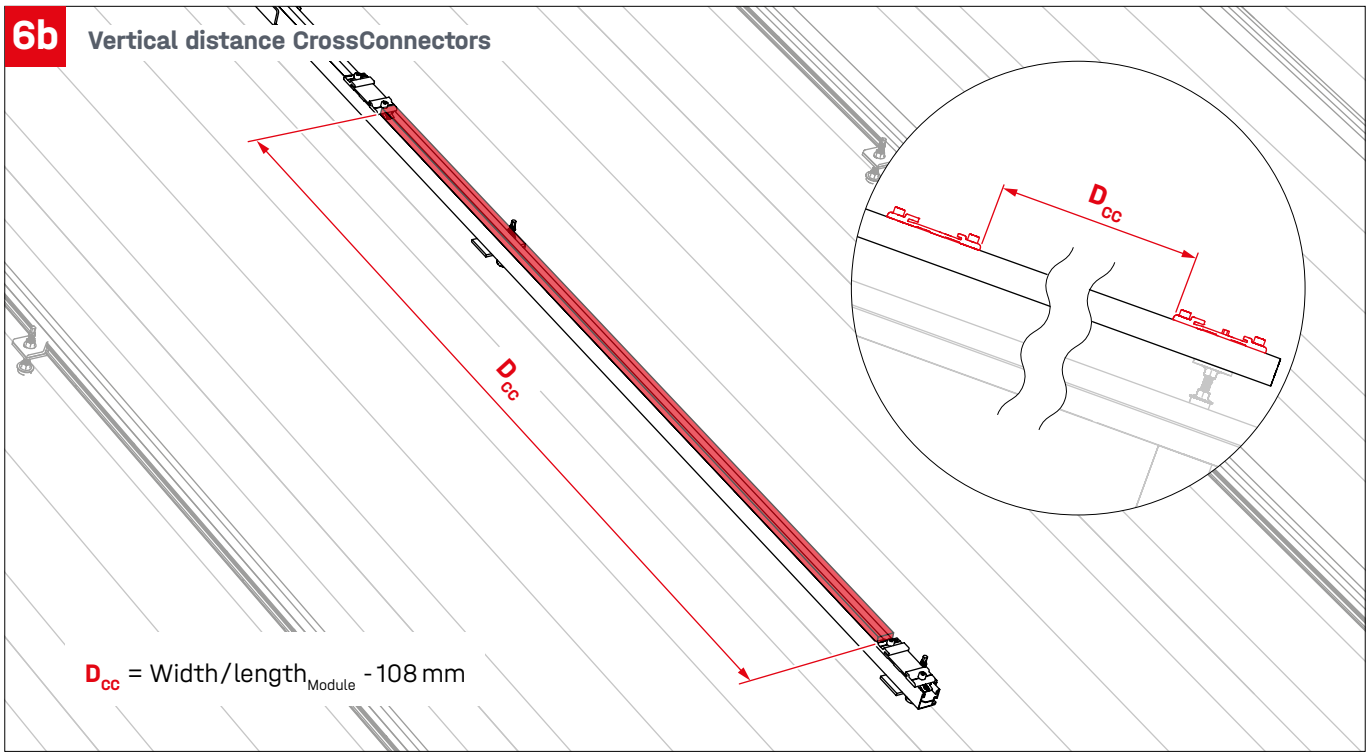

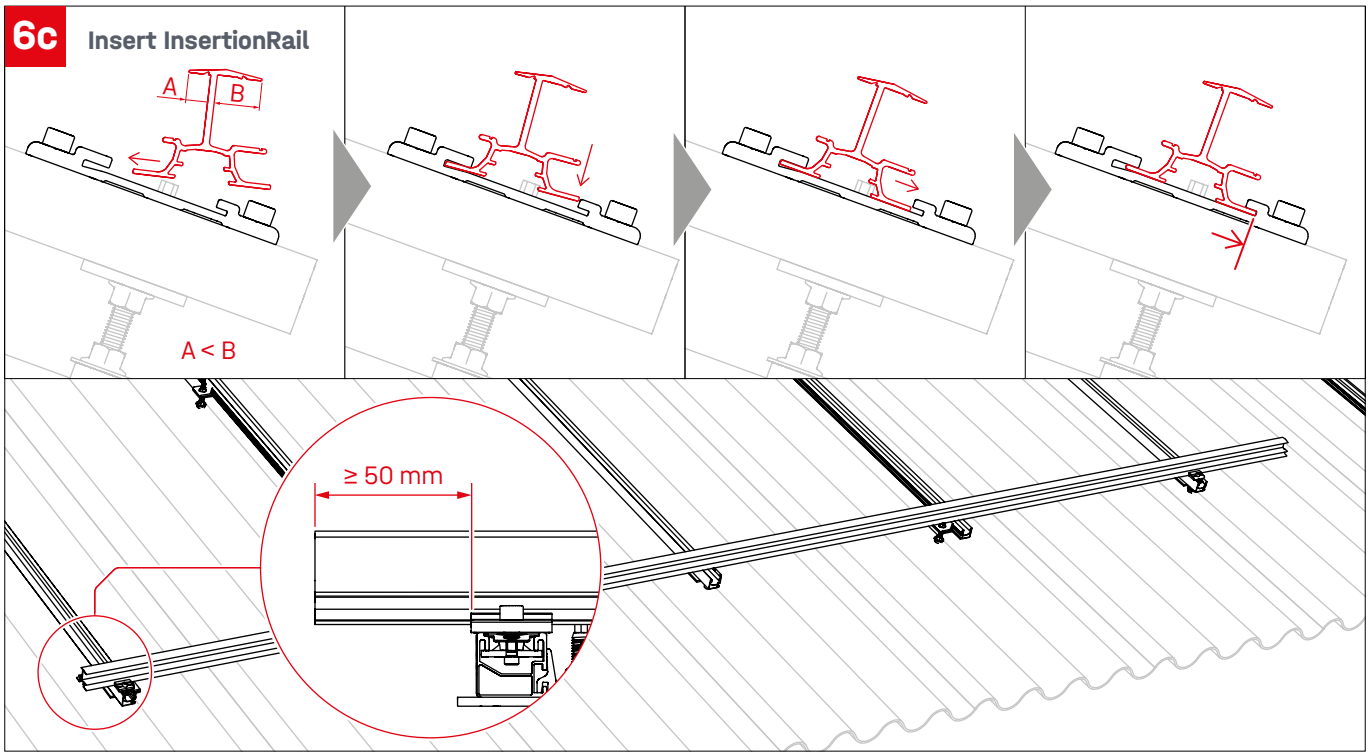
6c
Insert InsertionRail
A
B
A < B
≥ 50 mm

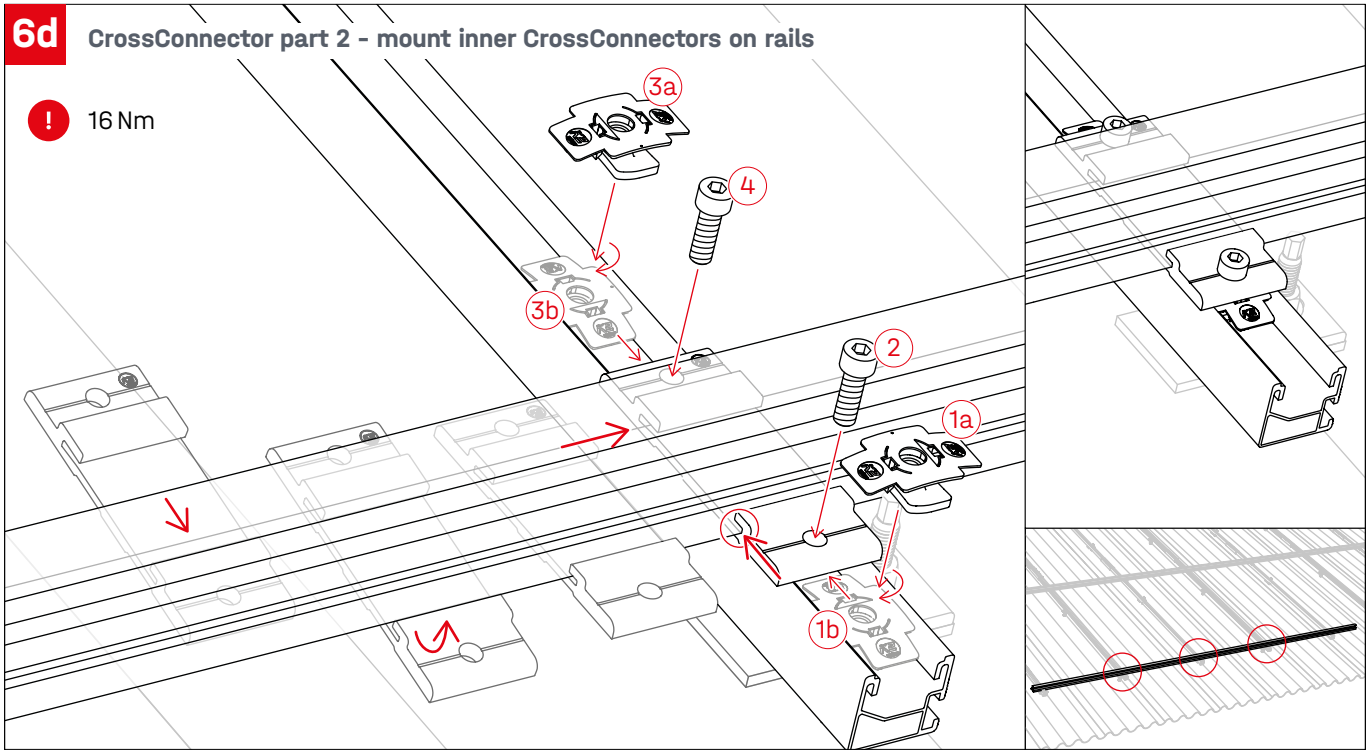
6d
CrossConnector part 2 - mount inner CrossConnectors on rails
16 Nm
3a
4
3b
2
1a
1b

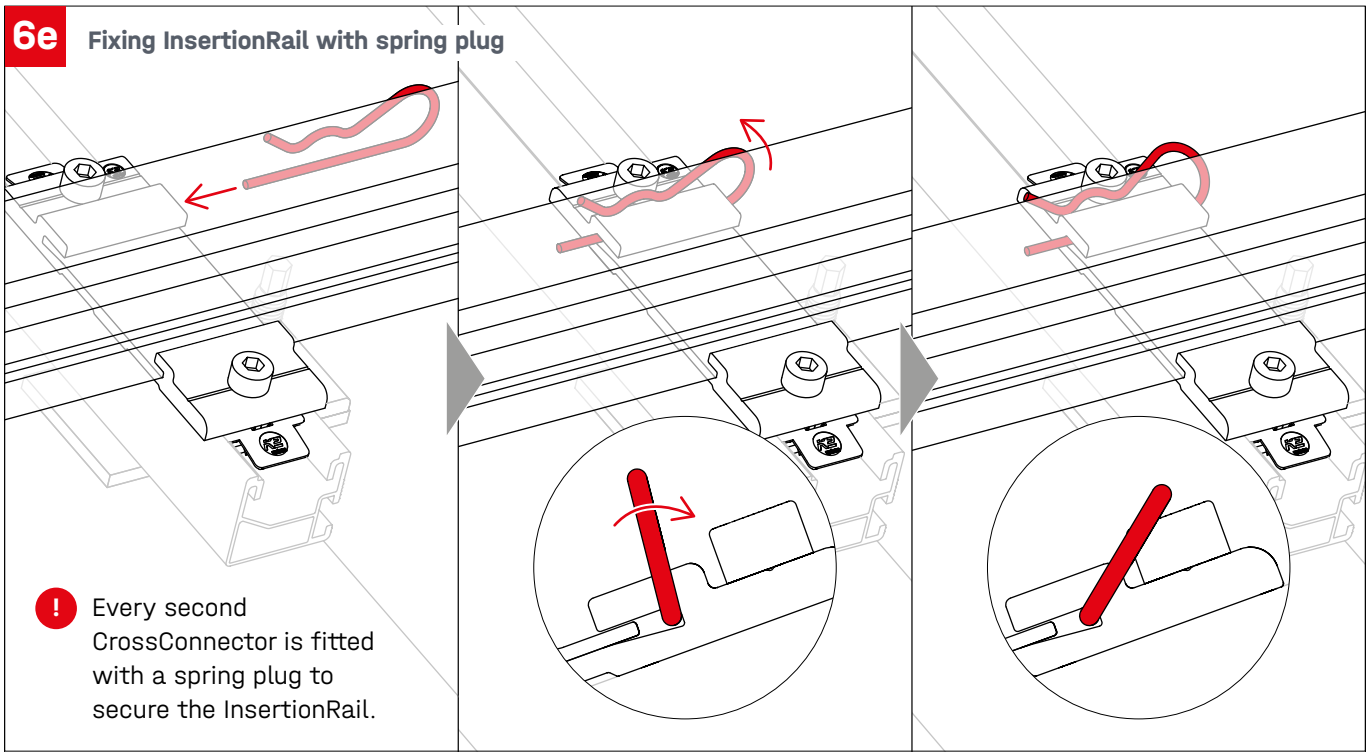

Rail connection with RailConnector

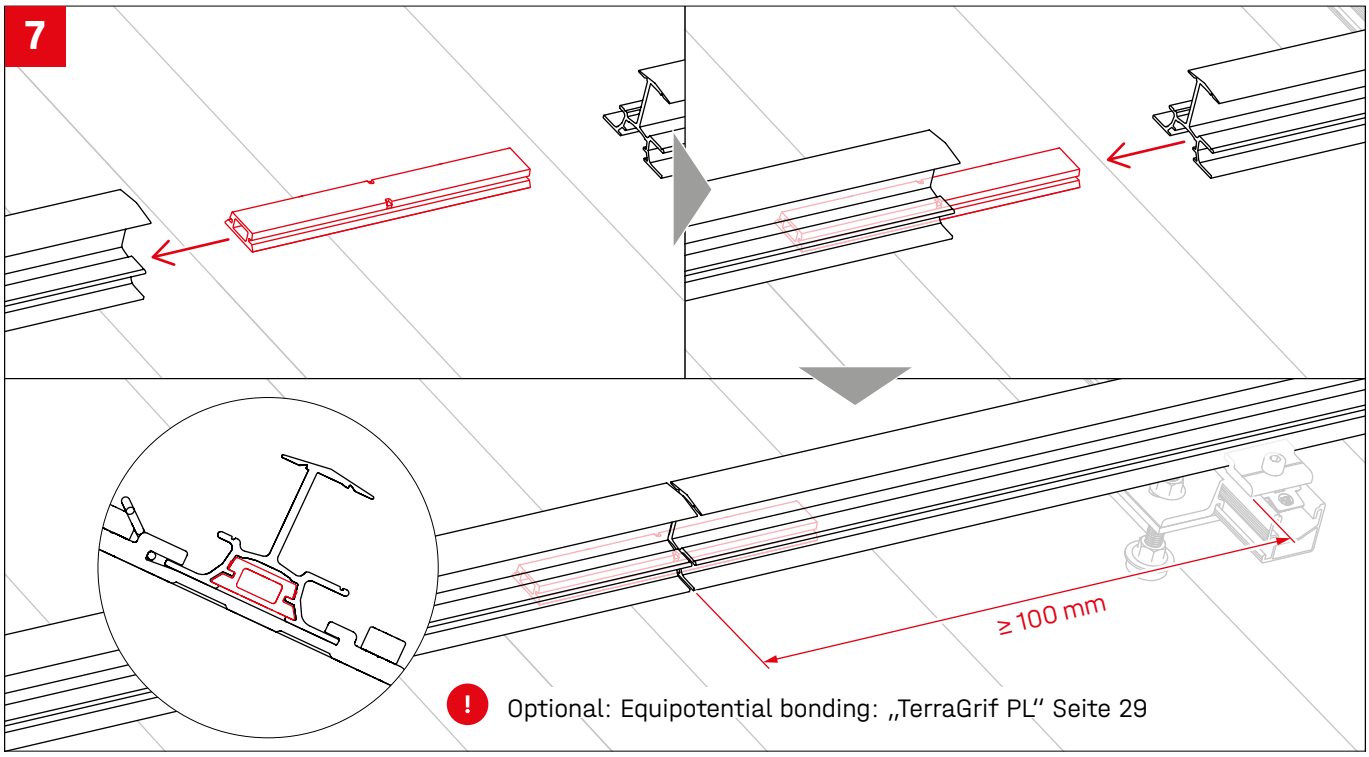

FixStop - positioning

8

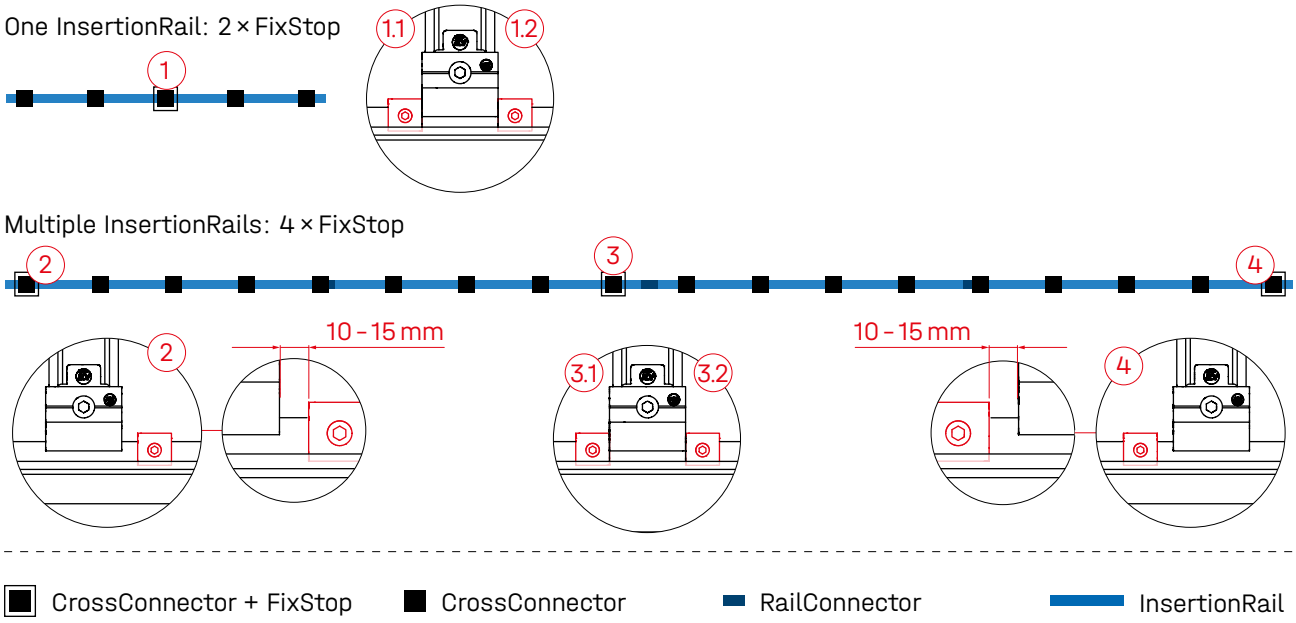

FixStop - assembly

9

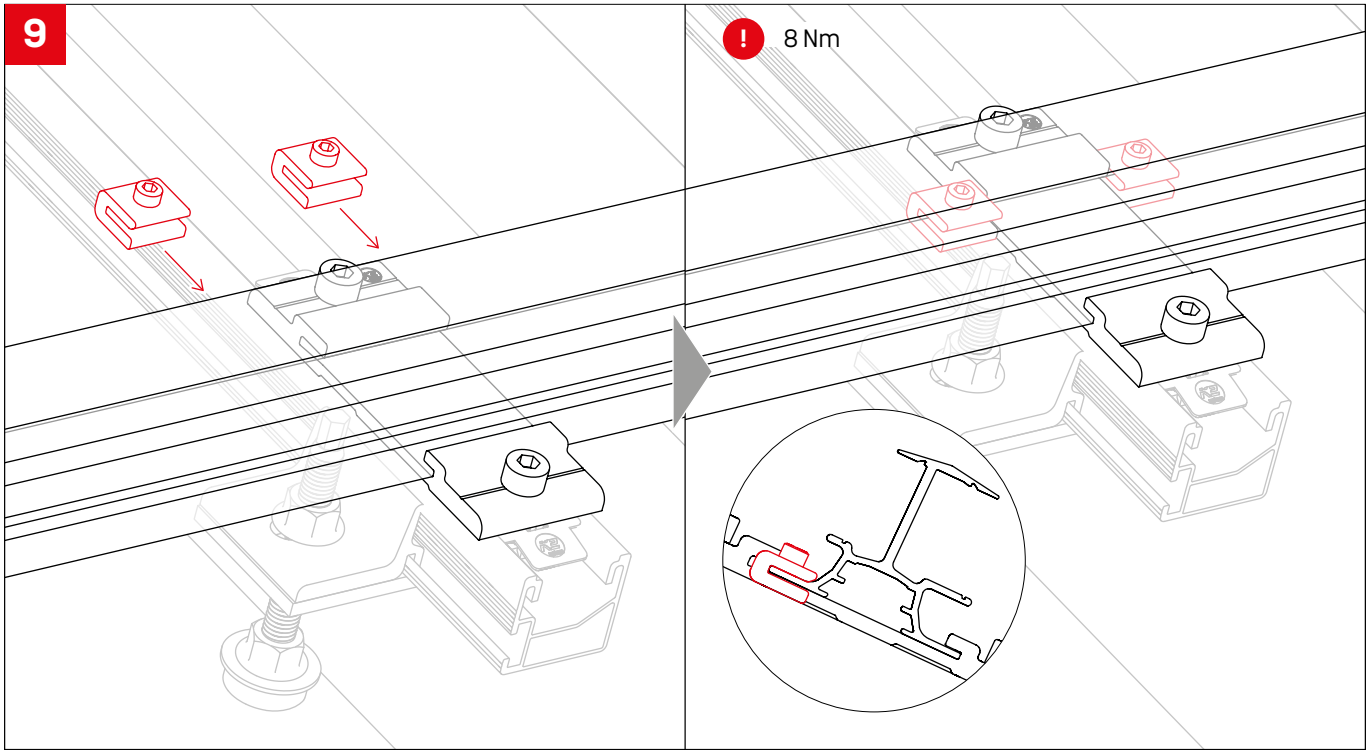

Side guarding with EndStop part 1

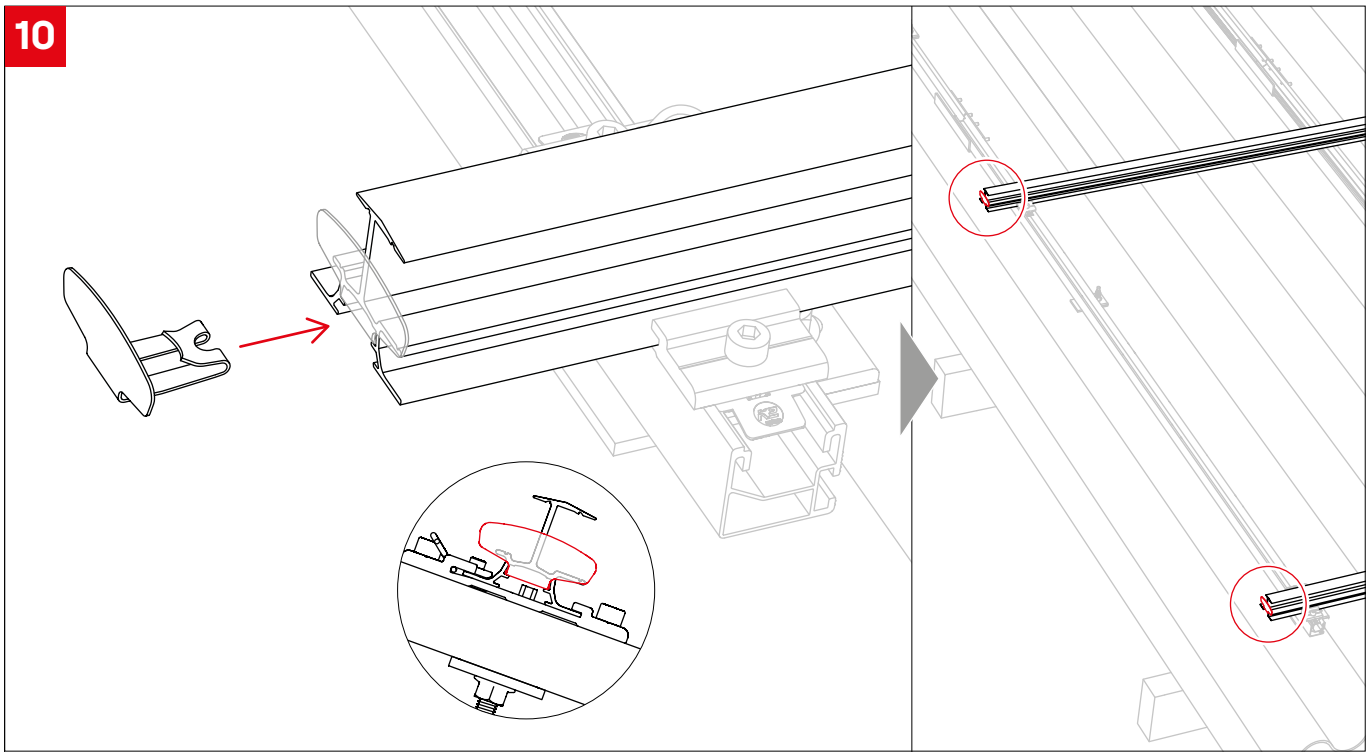

Insert modules

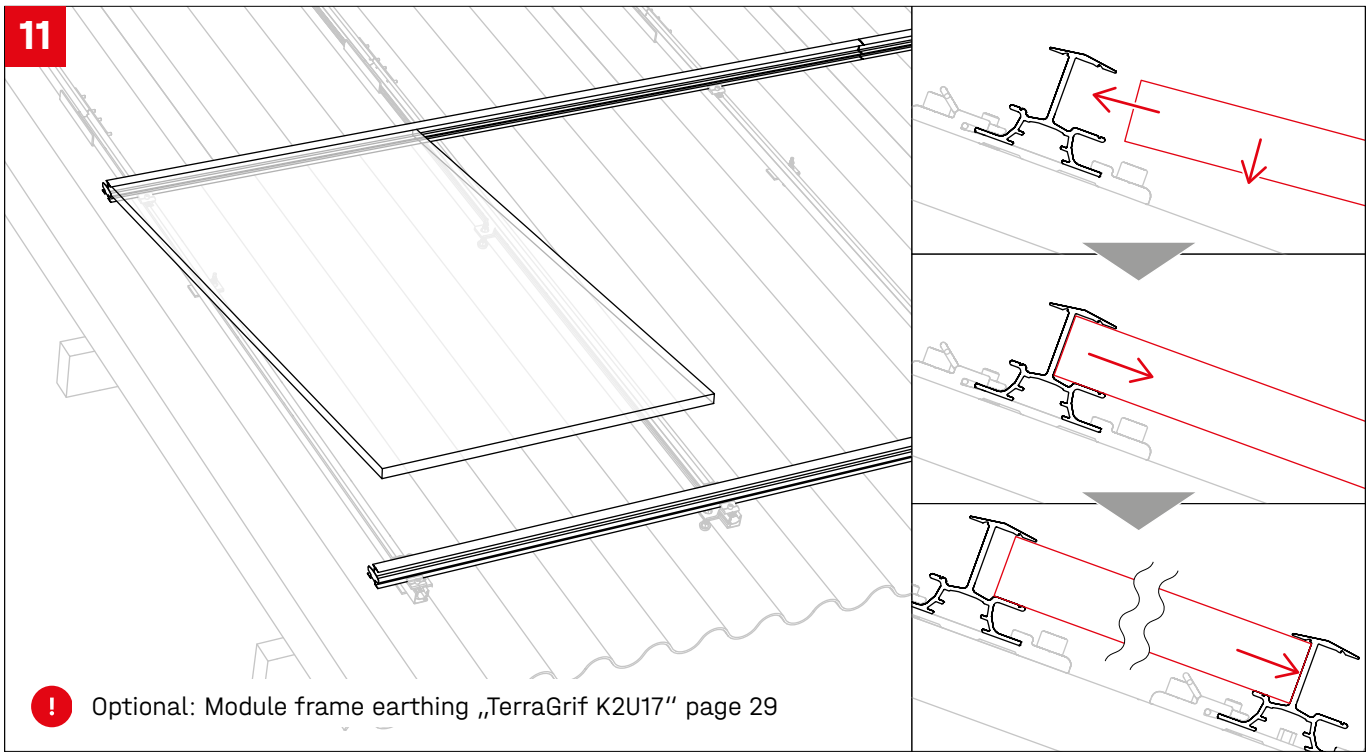

! Optional: Module frame earthing „TerraGrif K2U17“ page 29

Placement ModuleSafety

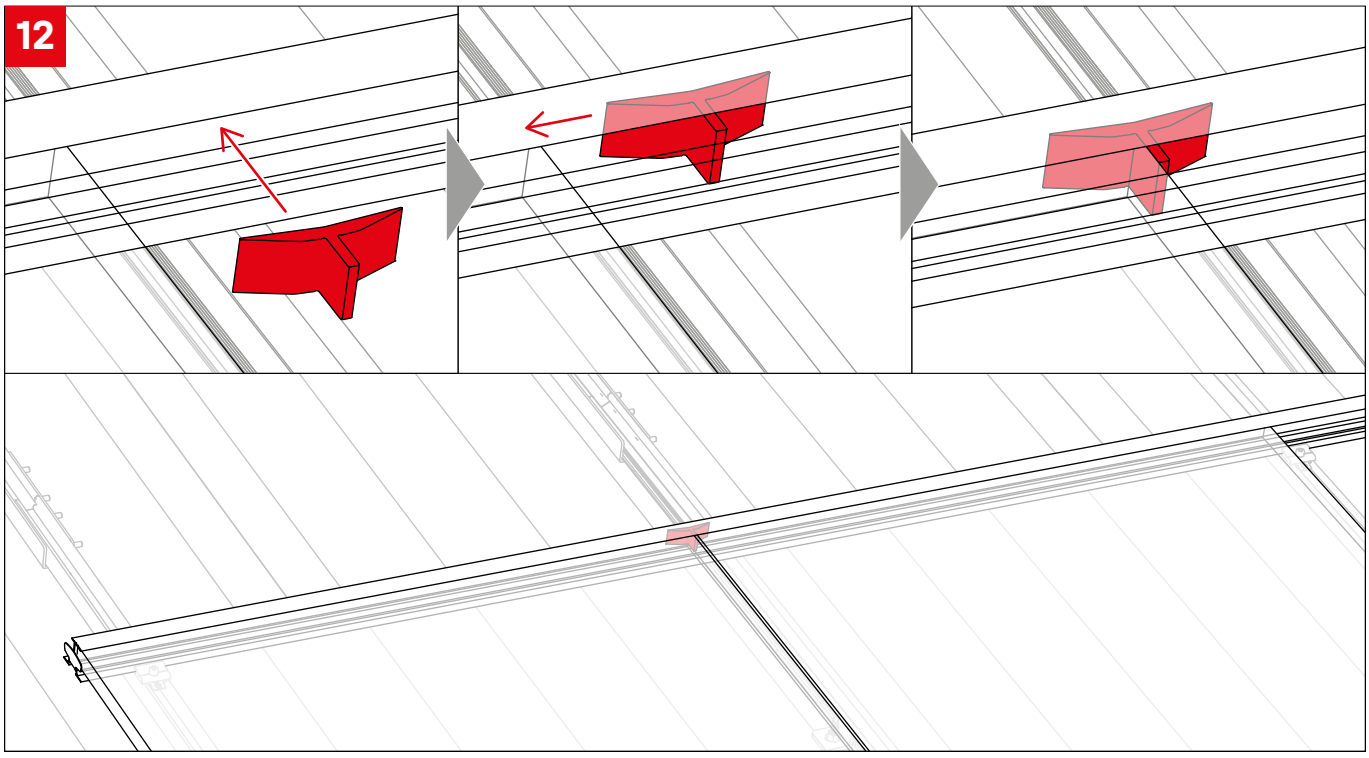

Side guarding with EndStop part 2

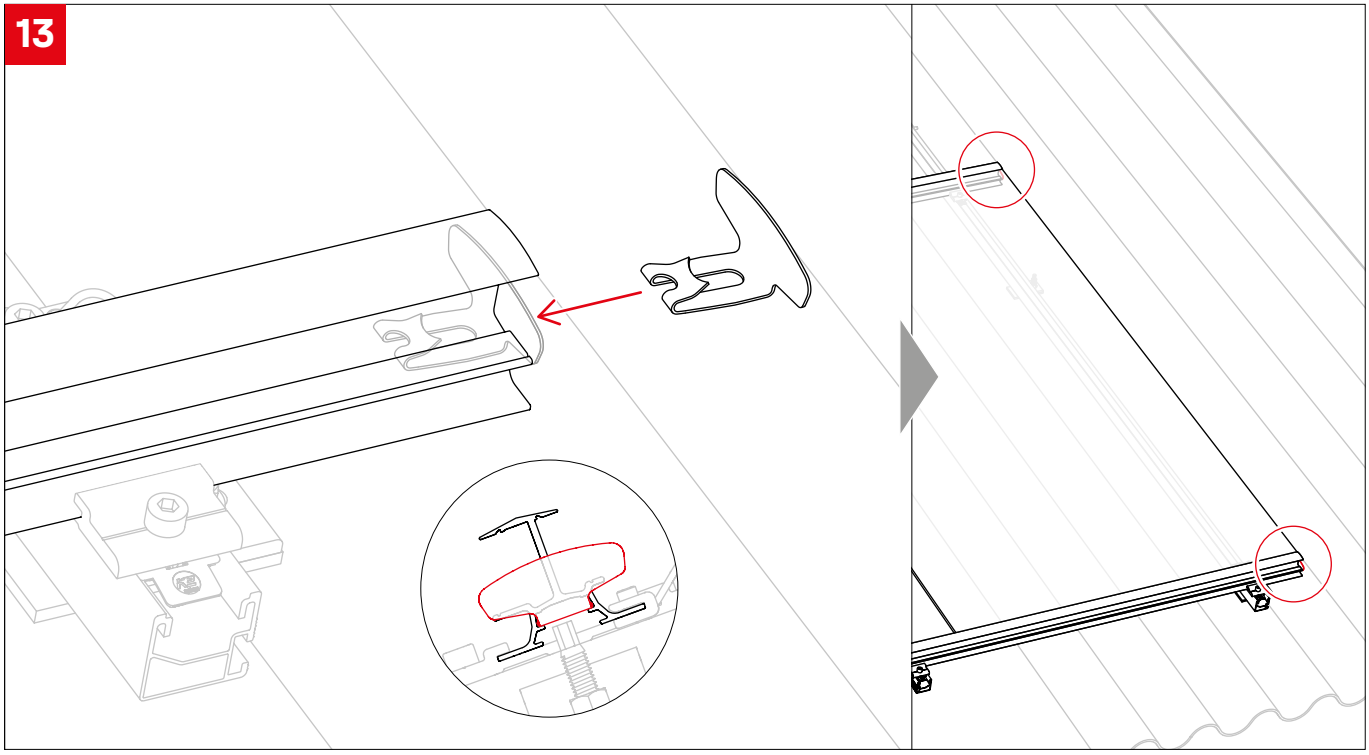

Equipotential bonding / module frame earthing

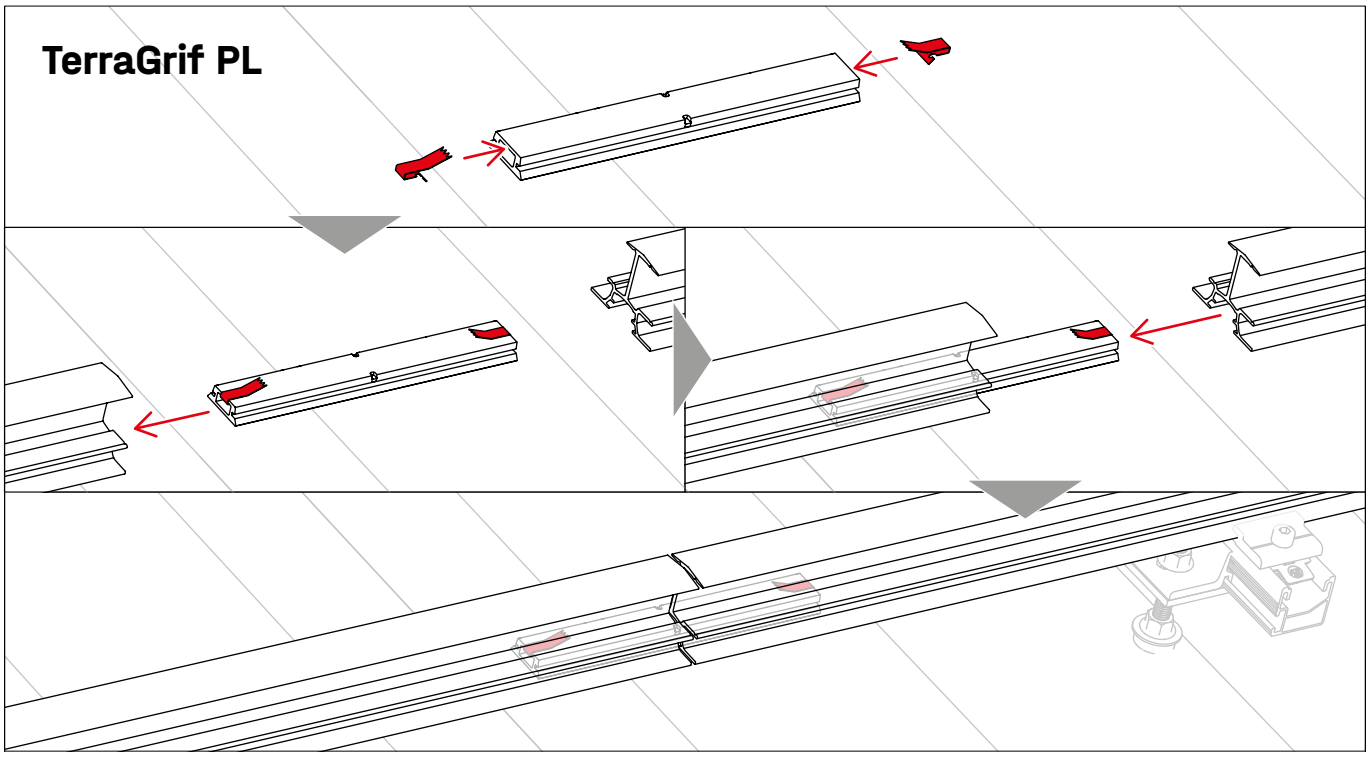

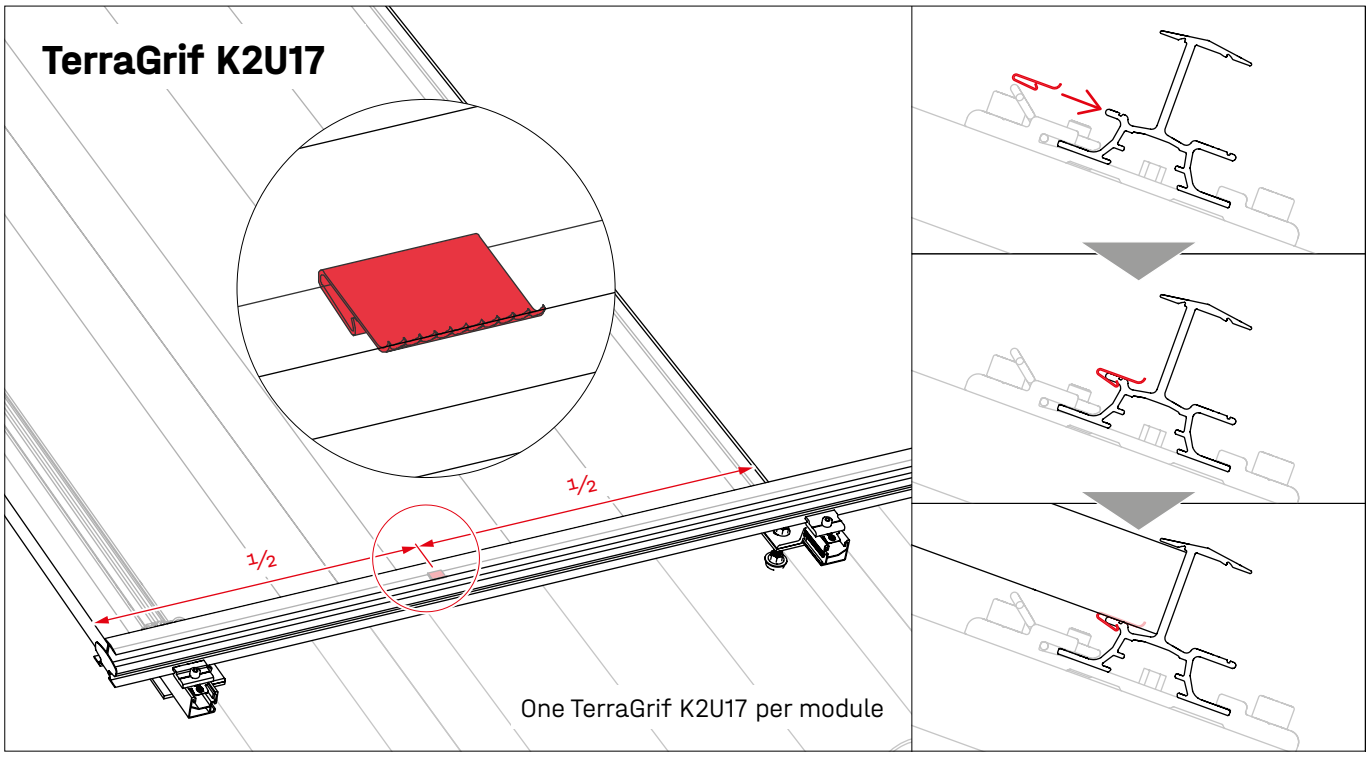

Optional

InsertionRail Cover

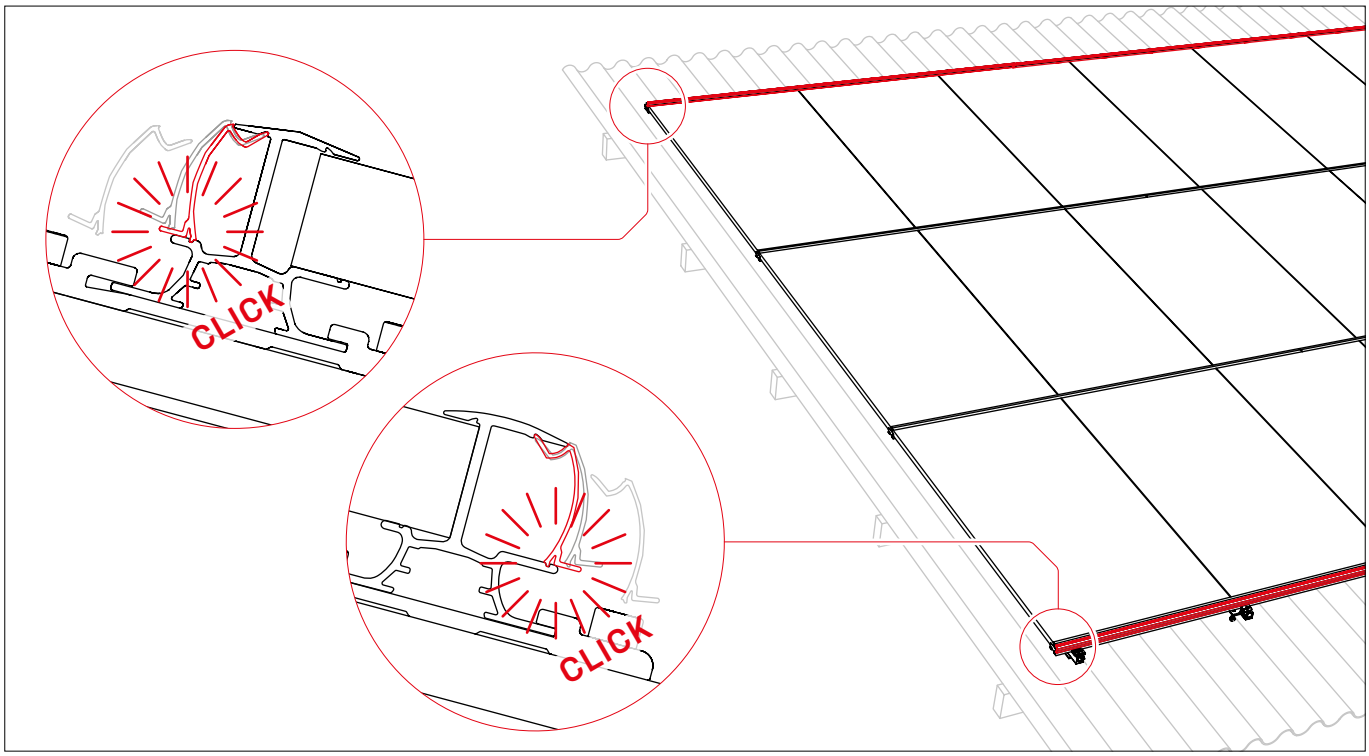

Cable management with Alpha PV-Clip

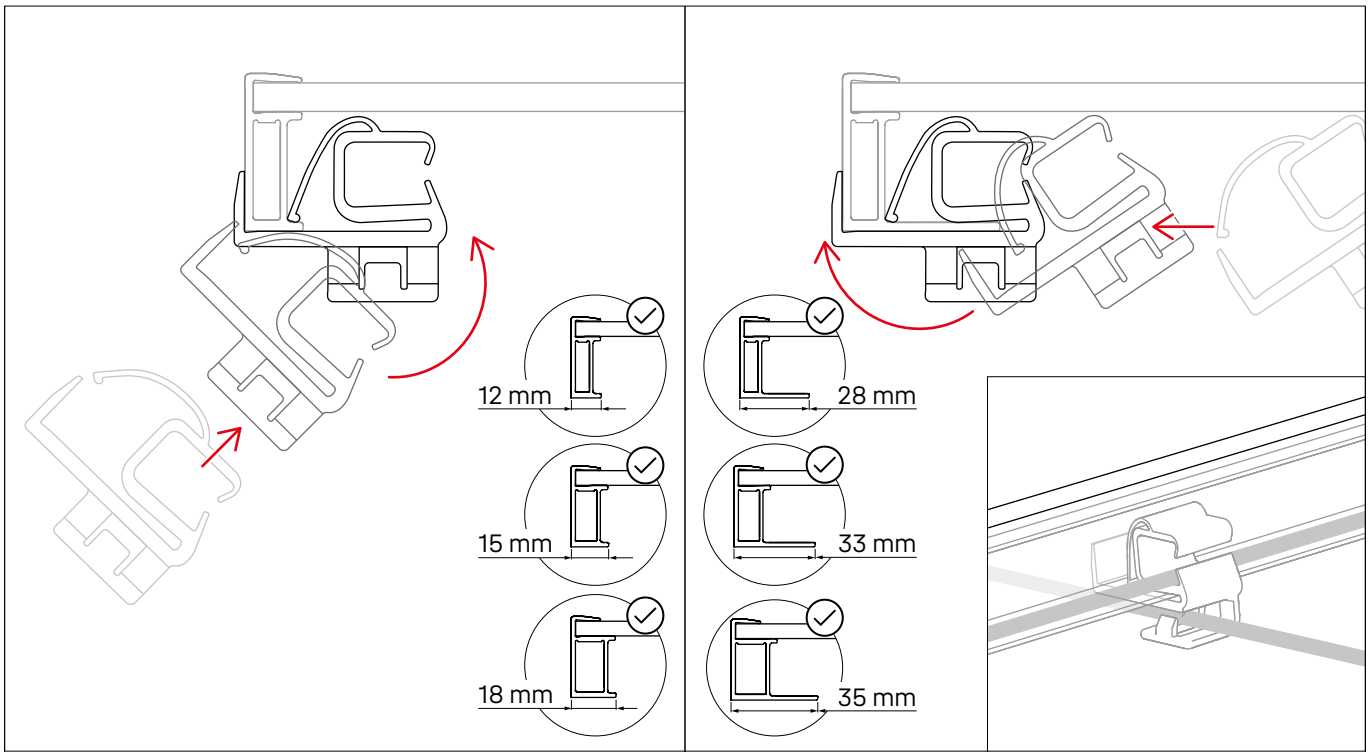

EndCap

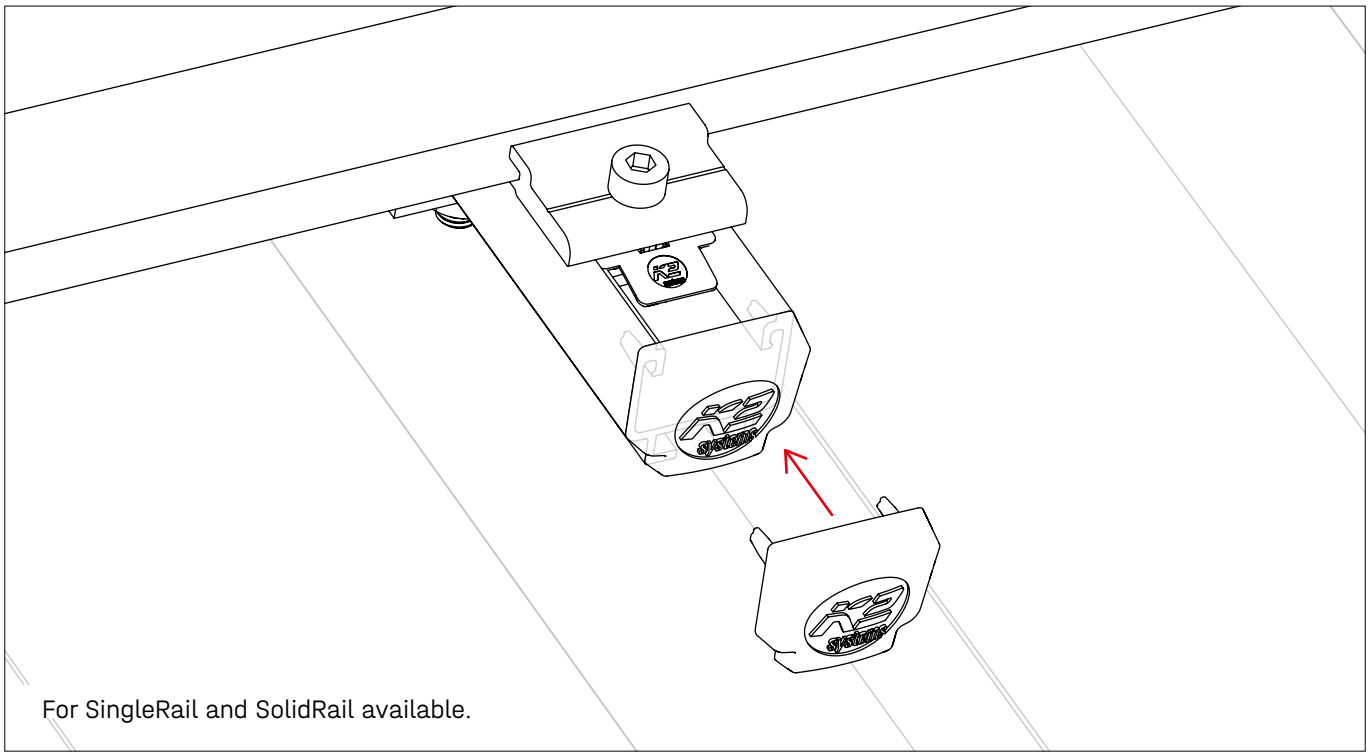

For SingleRail and SolidRail available.

Connecting Strength

Thank you for choosing a K2 mounting system.

Mounting ystems from K2 Systems are quick and easy to install. We hope these instructions have helped. Please contact us with any questions or suggestions for improvement. Our contact data:

- **k2-systems.com/en/contact**
- **Service Hotline: +49 (0)7159 42059-0**

Our General Terms of Business apply. Please refer:
k2-systems.com

K2 Systems GmbH
Haldenstraße 1 · 71272 Renningen · Germany
+49 (0) 7159 - 42059 - 0 · info@k2-systems.com · k2-systems.com

InsertionRail hanger bolts solar fasteners Assembly DE V2 | 0826 · Subject to change without notice · Images of the products are indicative and may differ from the original.