Ginlong Technologies Co., Ltd.
No. 57 JintongRoad, Binhai Industrial Park, Xiangshan, Ningbo,
Zhejiang, 315712, P.R.China.
Tel: +86 (0)574 6578 1806
Email:info@ginlong.com
Web: www.solisinverters.com

Please adhere to the actual products in case of any discrepancies in this user manual.

If you encounter any problem on the inverter, please find out the inverter S/N and contact us, we will try to respond to your question ASAP.

Solis Three Phase Inverter

(150-200)K Installation and Operation Manual

Ver 1.0

Ginlong Technologies Co., Ltd.

Contents

1. Introduction 4
1.1 Product Description 4
1.2 Unpacking and storage 5
1.2.1 Storage 6
2. Safety instructions 7
2.1 Safety symbols 7
2.2 General safety instructions 7
2.3 Notice for use 8
2.4 Notice for Disposal 8
3. Installation 9
3.1 Environmental considerations 9
3.1.1 Select a location for the inverter 9
3.1.2 Other environmental considerations 10
3.2 Product handling 11
3.3 Mounting the Inverter 12
3.3.1 Wall mounting 13
3.4 Electrical Connections 14
3.4.1 Grounding 15
3.4.2 Connect PV side of inverter 17
3.4.3 Connect grid side of inverter 19
3.4.4 Meter Connection(optional) 24
4. Communication & Monitoring 26
4.1 RS485 and PLC communication connection 26
4.2 Logic interface connection 29
5. Start and Shutdown 30
5.1 Start-up procedure 30
5.2 Shutdown procedure 31
6. Normal operation 32
6.1 APP Download 32
6.2 Log in the APP via bluetooth 32
6.3 Home Page 34
6.4 Info Page 35
6.5 Alarm Page 35
7. Maintenance 37
7.1 Anti-PID Function 37
7.2 Fan Maintenance 38
8. Troubleshooting 39
9. Specifications 42

1.1 Product Description

Solis Three phase Inverters covert DC power from the photovoltaic(PV) array into alternating current(AC) power that can satisfy local loads as well as feed the power distribution grid.

This manual covers the three phase inverter model listed below:

S6-GC3P150K07-NV-ND, S6-GC3P200K07-NV-ND, S6-GC3P80K07-LV-ND, S6-GC3P100K07-LV-ND

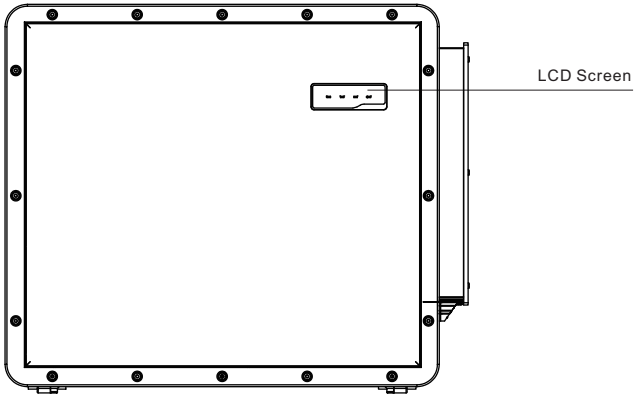

Figure 1.1 Front view

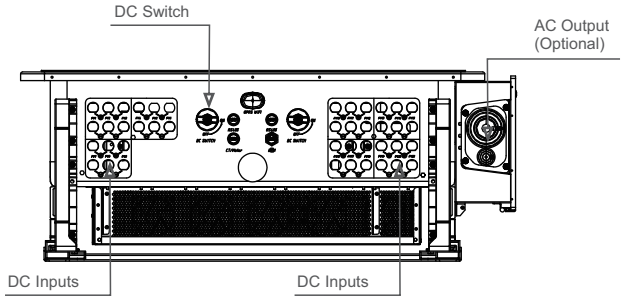

Figure 1.2 Bottom view

1. Introduction

1.2 Unpacking and storage

The inverter ships with all accessories in one carton.

When unpacking, please verify all the parts listed below are included:

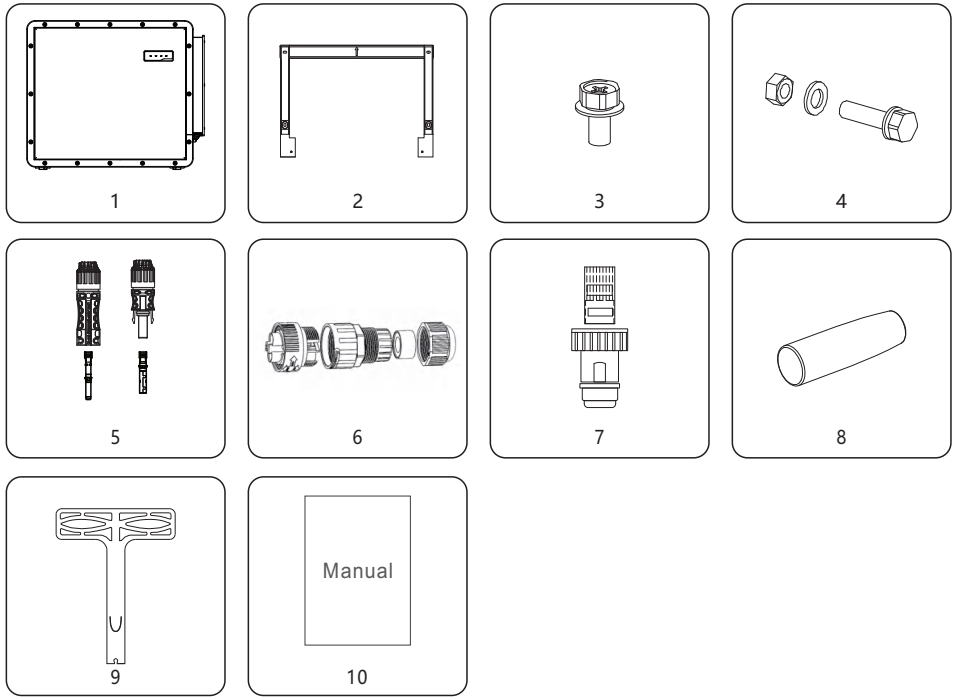

Part #	Description	Number	Remarks
1	Inverter	1	
2	Mounting Bracket	1	
3	Fastening screw	2	Hexagon bolt M6*12
4	Fastening screw, hex nut and flat gasket	4	Hexagon bolt M10*40
5	DC connector	21	Screw M10X40, Hexagonal nut M10, flat pad 10
6	2 pin port	3	
7	RJ45 connector	1	
8	Handle	4	
9	Switch reset rotary lever	1	
10	User manual	1	

Inverter packing list

1.2.1 Storage

If the inverter is not installed immediately, storage instructions and environmental conditions are below:

- Use the original box to repackage the inverter, seal with adhesive tape with the desiccant inside the box.
- Store the inverter in a clean and dry place, free of dust and dirt. The storage temperature must be between -40 - 70℃ and humidity should be between 0 to 95%, non-condensing.
- Do not stack more than three (3) inverters high on a single pallet.
- Keep the box(es) away from corrosive materials to avoid damage to the inverter enclosure.
- Inspect the packaging regularly. If packing is damaged (wet, pest damages, etc.), repackage the inverter immediately.
- Store inverters on a flat, hard surface -- not inclined or upside down.
- After 100 days of storage, the inverter and carton must be inspected for physical damage before installing. If stored for more than 1 year, the inverter needs to be fully examined and tested by qualified service or electrical personnel before using.
- Restarting after a long period of non-use requires the equipment be inspected and, in some cases, the removal of oxidation and dust that has settled inside the equipment will be required.

DO NOT STACK MORE THAN 3 HIGH

Figure 1.3

Improper use may result in electric shock hazards or burns. This product manual contains important instructions that are required to be followed during installation and maintenance. Please read these instructions carefully before use and keep them in an easily locatable place for future reference.

2.1 Safety symbols

Safety symbols used in this manual, which highlight potential safety risks and important safety information, are listed below:

WARNING
Symbol indicates important safety instructions, which if not correctly followed, could result in serious injury or death.

NOTE
Symbol indicates important safety instructions, which if not correctly followed, could result in damage to or the destruction of the inverter.

CAUTION, RISK OF ELECTRIC SHOCK
Symbol indicates important safety instructions, which if not correctly followed, could result in electric shock

CAUTION, HOT SURFACE
Symbol indicates safety instructions, which if not correctly followed, could result in burns.

2.2 General safety instructions

WARNING
Do not connect PV array positive (+) or negative (-) to ground – doing so could cause serious damage to the inverter.

WARNING
Electrical installations must be done in accordance with local and national electrical safety standards.

WARNING
To reduce the risk of fire, branch circuit over-current protective devices (OCPD) are required for circuits connected to the Inverter.

CAUTION
The PV array (solar panels) supplies a DC voltage when exposed to light.

2. Safety Instructions

CAUTION
Risk of electric shock from energy stored in the inverter's capacitors. Do not remove cover until 20 minutes after disconnecting all sources of supply have passed, and this can only be done by a service technician. The warranty may be voided if any unauthorized removal of cover occurs.

CAUTION
The inverter's surface temperature can reach up to 70℃ . To avoid risk of burns, do not touch the surface when the inverter is operating. Inverter must be installed out of the reach of children.

WARNING
The inverter can only accept a PV array as a DC input. Using any other type of DC source could damage the inverter.

2.3 Notice for use

The inverter has been constructed according to applicable safety and technical guidelines. Use the inverter in installations that meet the following requirements ONLY:

1). The inverter must be permanently installed.
2). The electrical installation must meet all the applicable regulations and standards.
3). The inverter must be installed according to the instructions stated in this manual.
4). The system design must meet inverter specifications.
5). The inverter can only be used for industrial.

To start-up the inverter, the Grid Supply Main Switch (AC) must be turned on, BEFORE the DC Switch is turned on. To stop the inverter, the Grid Supply Main Switch (AC) must be turned off before the DC Switch is turned off.

2.4 Notice for Disposal

This product shall not be disposed of with household waste. They should be segregated and brought to an appropriate collection point to enable recycling and avoid potential impacts on the environment and human health. Local rules in waste management shall be respected .

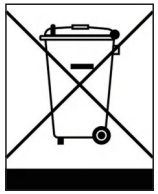

3. Installation

3.1 Environmental considerations

3.1.1 Select a location for the inverter

When selecting a location for the inverter, consider the following:

WARNING: Risk of fire
Despite careful construction, electrical devices can cause fires.
- Do not install the inverter in areas containing highly flammable materials or gases.
- Do not install the inverter in potentially explosive atmospheres.
- The mounting structure where the inverter is installed must be fireproof.

- The temperature of the inverter heat-sink can reach 70℃.
- The inverter is designed to work in an ambient temperature range between -30 to 60℃.
- If multiple inverters are installed on site, a minimum clearance of 700mm should be kept between each inverter and all other mounted equipment. The bottom of the inverter should be at least 500mm above of the ground or floor (see Figure 3.1).
- The LED status indicator lights and the LCD located on the inverter's front panel should not be blocked.
- Adequate ventilation must be present if the inverter is to be installed in a confined space.
- When multiple inverters are installed and the space is sufficient, a zigzag installation is recommended. Font type, back-to-back installation is not recommended. Do not install it stacked up and down.

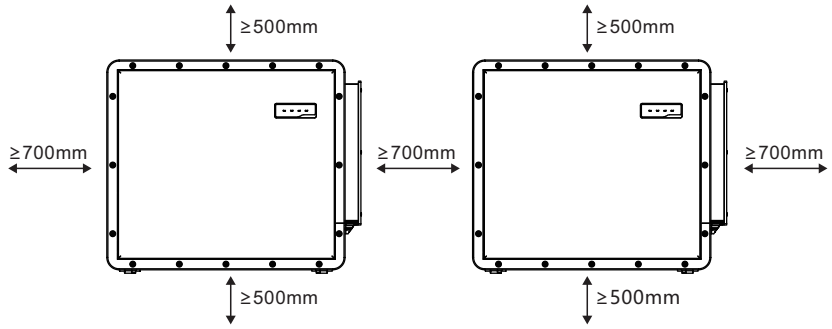

Figure 3.1 Distances required between inverters

NOTE
Nothing should be stored on or placed against the inverter.

When multiple inverters are installed and the space is sufficient, a zigzag installation is recommended. Font type, back-to-back installation is not recommended.
Do not install it stacked up and down.
When the installation site is a horizontal plane, the inverter can be installed at an Angle of more than 15 degrees horizontally, as shown in the figure.

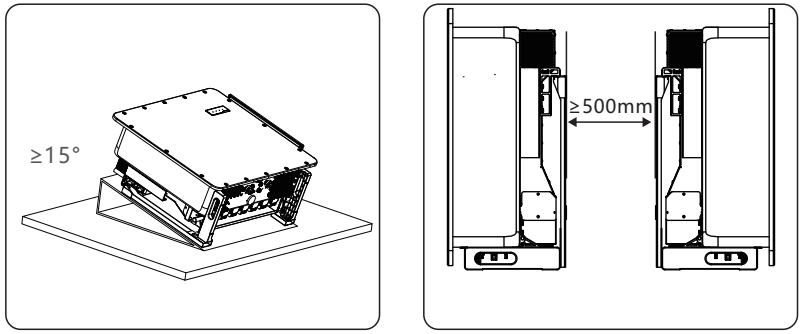

Figure 3.2 Horizontal and back-to-back installation

3.1.1.1 Examples of correct and incorrect installations

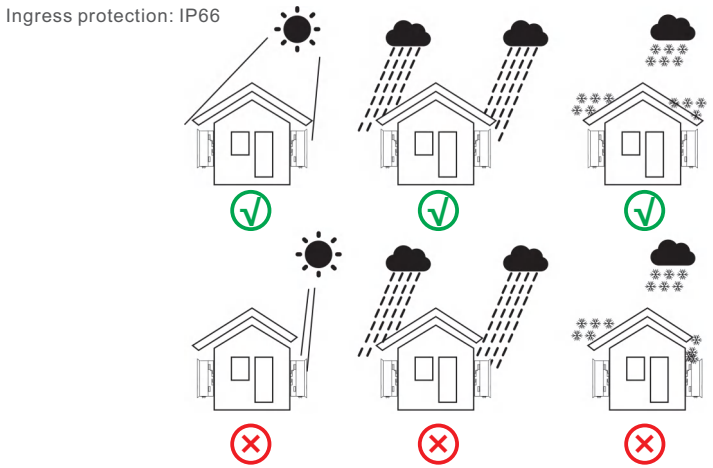

Figure 3.3 Recommended Installation locations

3. Installation

3.1.2 Other environmental considerations

3.1.2.1 Consult technical data

Consult the specifications section (section 10) for additional environmental conditions (protection rating, temperature, humidity, altitude, etc.).

3.1.2.2 Avoiding direct sunlight

Installation of the inverter in a location exposed to direct sunlight should to be avoided.
Direct exposure to sunlight could cause:

- Power output limitation (with a resulting decreased energy production by the system).
- Premature wear of the electrical/electromechanical components.
- Premature wear of the mechanical components (gaskets) and user interface.

3.1.2.3 Air circulation

Do not install in small, closed rooms where air cannot freely circulate. To prevent overheating, always ensure that the air flow around the inverter is not blocked.

3.1.2.4 Flammable substances

Do not install near flammable substances. Maintain a minimum distance of three (3) meters (10 feet) from such substances.

3.1.2.5 Living area

Do not install in a living area where the prolonged presence of people or animals is expected. Depending on where the inverter is installed (for example: the type of surface around the inverter, the general properties of the room, etc.) and the quality of the electricity supply, the sound level from the inverter can be quite high.

3.2 Product handling

Please review the instruction below for handling the inverter:

1. The red circles below denote cutouts on the product package.
   Push in the cutouts to form handles for moving the inverter around 135KG.

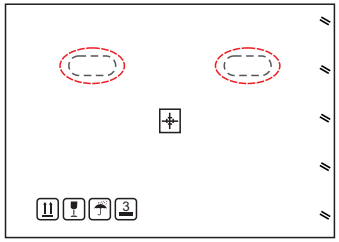

Figure 3.4 Handles used to move the inverter shown circled in red

2. Two people are required to remove the inverter from the shipping box. Use the handles integrated into the heat sink to remove the inverter from the carton (see Figure 3.5).

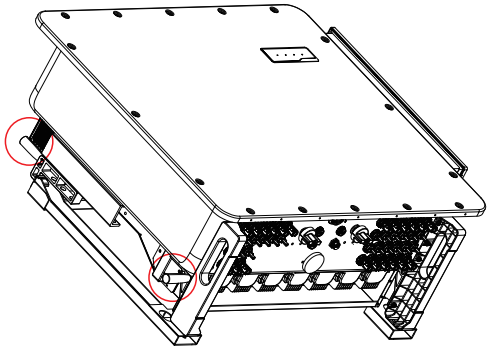

Figure 3.5 Inverter handles

WARNING

Due to the weight of the inverter, contusions or bone fractures could occur when incorrectly lifting and mounting the inverter. When mounting the inverter, take the weight of the inverter into consideration. Use a suitable lifting technique when mounting. When installers are carrying the inverter, please use 4 handles to secure safety. Lifting force of each handle shall not exceed 1.5 times of the inverter weight.

In case of using hoisting to lift the inverter, fix the hoisting cable to the hanger shown in the graph. Please make a reasonable selection of hoisting equipment considering the inverter weight of 105kg.

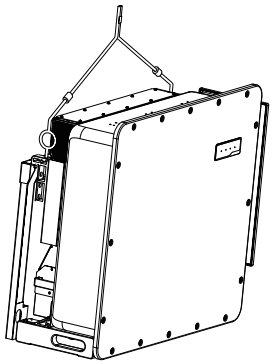

Figure 3.6 Hoisting sketch

3. Installation

3.3 Mounting the Inverter

The inverter can be mounted to the wall or metal array racking. The mounting holes should be consistent with the size of the bracket or the dimensions shown in Figure 3.7.

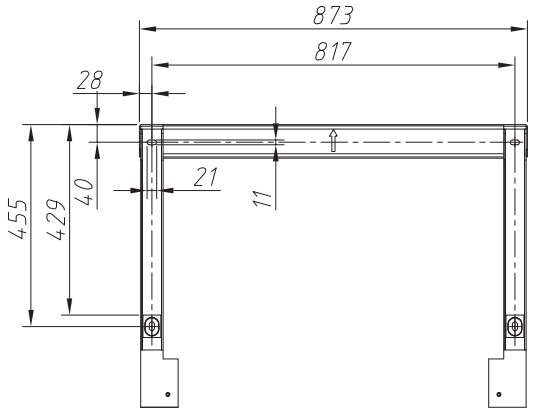

Figure 3.7 Inverter wall mounting

3.3.1 Wall mounting

Inverter shall be mounted vertically. The steps to mount the inverter are listed below.

1. Refer to Figure 3.8, drill holes for mounting screws based on the hole diameter of bracket using a precision drill keeping the drill perpendicular to the wall. Max depth is 3.7 in.
2. Make sure the bracket is horizontal. And the mounting holes are marked correctly. Drill the holes into wall at your marks.
3. Use the suitable mounting screws to attach the bracket on the wall.
4. Lift the inverter and hang it on the bracket, and then slide down to make sure they match perfectly.

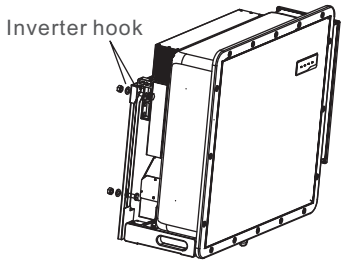

Figure 3.8 Install the inverter

5. Use screws in the packaging to fix the inverter to the mount bracket.

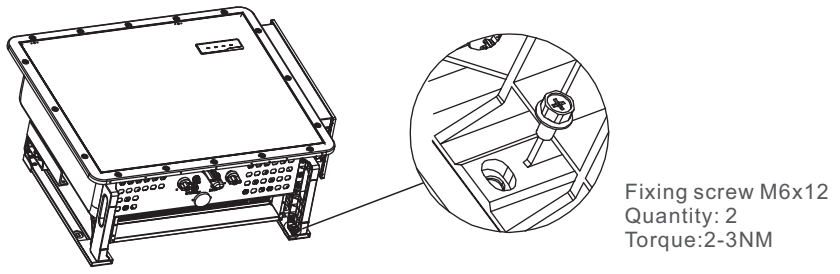

Figure 3.9 Fix the inverter

3.4 Electrical Connections

Inverter design uses PV style quick-connect terminal. The top cover needn't be opened during DC electrical connection. The labels located the bottom of the inverter are described below in table 3.1. All electrical connections are suitable for local or national standard.

Parts	Connection	Cable size	Torque
DC terminal	PV strings	4-6mm²	NA
Ground terminal	AC ground	35-50mm²	10-12N.m
Grid terminal	Grid	70-400mm²	20-30N.m
RS-485 terminal	Communication cable	0.5-0.75mm²	0.6N.m
COM terminal	Wi-Fi/Cellular stick	NA	NA
DC surge protection device	NA	NA	NA

Table 3.1 Electrical connection symbols

The electrical connection of the inverter must follow the steps listed below:

1. Switch the Grid Supply Main Switch (AC) OFF.
2. Switch the DC Isolator OFF.
3. Connect the inverter to the grid.
4. Assemble PV connector and connect to the Inverter.

3.4.1 Grounding

To effectively protect the inverter, two grounding methods must be performed.
Connect the AC grounding cable (Please refer to section 3.4.3)
Connect the external grounding terminal.

To connect the grounding terminal on the heat sink, please follow the steps below:

1) Prepare the grounding cable: recommend to use the outdoor copper-core cable. The grounding wire should be at least half size of the hot wires.

2) Prepare OT terminals: M10.

Important:
For multiple inverters in parallel , all inverters should be connected to the same ground point to eliminate the possibility of a voltage potential existing between inverter grounds.

3) Strip the ground cable insulation to a suitable length.

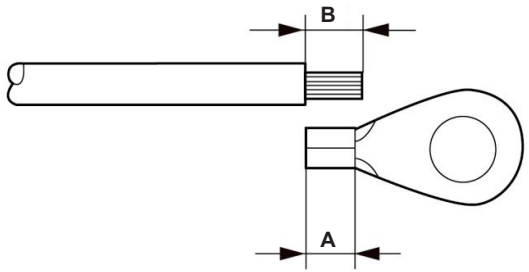

Figure 3.10 Suitable length

Important:
B (insulation stripping length) is 2mm~3mm longer than A (OT cable terminal crimping area) .

4) Insert the stripped wire into the OT terminal crimping area and use the hydraulic clamp to crimp the terminal to the wire.

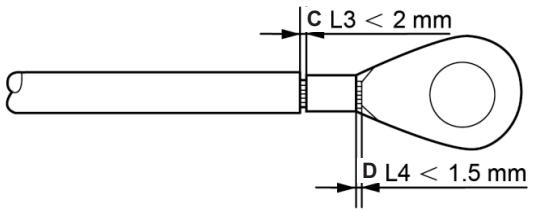

Figure 3.11 Strip wire

Important:
After crimping the terminal to the wire, inspect the connection to ensure the terminal is solidly crimped to the wire.

5) Remove the screw from the heat sink ground point.

6) Connect the grounding cable to the grounding point on the heat sink, and tighten the grounding screw, Torque is 10-12Nm.

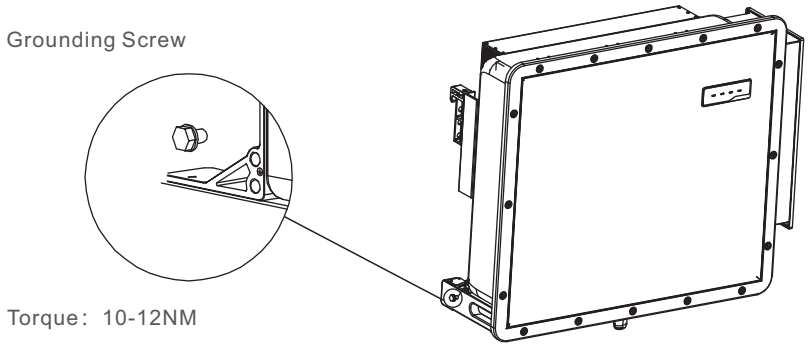

Figure 3.12 Fixed cable

Important:
For improving anti-corrosion performance,
after ground cable installed, apply silicone or paint.

3.4.2 Connect PV side of inverter

WARNING
Before connecting the inverter, make sure the PV array open circuit voltage is within the limit of the inverter. Otherwise, the inverter could be damaged.

WARNING
DO NOT connect the PV array positive or PV array negative cable to ground. This can cause serious damage to the inverter!

WARNING
MAKE SURE the polarity of the PV array output conductors matches the DC- and DC+ terminal labels before connecting these conductors to the terminals of the inverter.

WARNING
Please use the original DC MC4 terminals, otherwise the unqualified DC connectors may cause damages to the inverter.

Important:
The inverter has a DC fuseless design with internal overcurrent protection. It is not needed to install any external DC string fuses or DC circuit breakers. If customers want to have redundant protection, they can choose to install external DC overcurrent protection devices with 1.5~2.4 times of the string Impp. External DC overcurrent protection devices shall comply with IEC/EN 60269-6.

Please see table 3.1 for acceptable wire size for DC connections.Wire must be copper only.

The steps to assemble the DC connectors are listed as follows:

1. Strip off the DC wire for about 7mm, Disassemble the connector cap nut.
2. Insert the wire into the connector cap nut and contact pin.

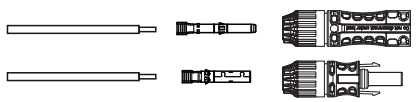

Figure 3.13 Disassemble the Connector Cap nut

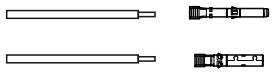

Figure 3.14 Insert the Wire into the Connector Cap nut and contact pin

3. Crimp the contact pin to the wire using a proper wire crimper.
4. Insert metal connector into top of connector, and tighten nut with torque 3-4 Nm.

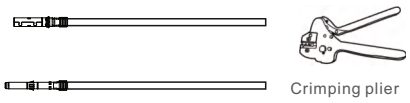

Figure 3.15 Crimp the contact pin to the wire

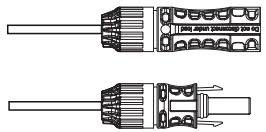

Figure 3.16 Connector with Cap nut Screwed on

5. Measure PV voltage of DC input with multimeter, verify DC input cable polarity (see figure 3.17), and ensure each string voltage is in range of inverter operation. Connect DC connector with inverter until hearing a slight clicking sound indicating successful connection. (see figure 3.18)

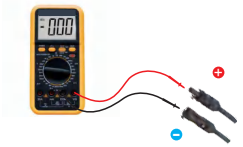

Figure 3.17 Multimeter measurement

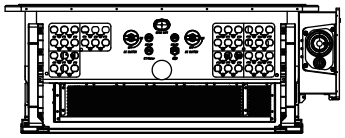

Figure 3.18 Connect the DC Connectors to the Inverter

Cable type	Traverse area（mm²）		Outside diameter of cable（mm）
	Range	Recommended value	
Industry generic PV cable (model:PV1-F)	4.0~6.0 (12~10AWG)	4.0 (12AWG)	5.5~9.0

Caution:
If DC inputs are accidently reversely connected or inverter is faulty or not working properly, it is NOT allowed to turn off the DC switch. Otherwise it may cause DC arc and damage the inverter or even lead to a fire disaster.
The correct actions are:
*Use a clip-on ammeter to measure the DC string current.
*If it is above 0.5A, please wait for the solar irradiance reduces until the current decreases to below 0.5A.
*Only after the current is below 0.5A, you are allowed to turn off the DC switches and disconnect the PV strings.
* In order to completely eliminate the possibility of failure, please disconnect the PV strings after turning off the DC switch to aviod secondary failures due to continuous PV energy on the next day.
Please note that any damages due to wrong operations are not covered in the device warranty.

Requirements for the PV modules per MPPT input:

- All PV modules must be of the same type and power rating.
- Please ensure the PV strings are evenly connected to the inverter and try to utilize all the MPPT trackers.
- All PV modules must be aligned and tilted identically.
- The open-circuit voltage of the PV array must never exceed the maximum input voltage of the inverter, even at the coldest expected temperature. (see section 10 “Specifications” for input current and voltage requirements)
- Each string connected to a single MPPT must consist of the same number of series-connected PV modules.

3.4.2.1 DC connection high voltage danger notice

CAUTION
RISK OF ELECTRIC SHOCK

Do not touch an energized DC conductor. There are high voltages present when PV modules are exposed to light causing a risk of death due to an electric shock from touching a DC conductor!
Only connect the DC cables from the PV module to the inverter as described in this manual.

CAUTION
POTENTIAL DAMAGE TO THE INVERTER DUE TO OVERVOLTAGE

The DC input voltage of the PV modules must not exceed the maximum rating of the inverter. (see section 10 “Specifications”)
Check the polarity and the open-circuit voltage of the PV strings before connecting the DC cables to the inverter.
Confirm proper string length and voltage range before connecting DC cable to the inverter.

3.4.3 Connect grid side of inverter

WARNING
An over-current protection device must be used between the inverter and the grid.

1. Connect the three (3) AC conductors to the three (3) AC terminals marked “L1”, “L2” and “L3”. Refer to local code and voltage drop tables to determine the appropriate wire size and type.
2. Connect the grounding conductor to the terminal marked “PE” (protective earth, the ground terminal).
3. Connect the terminal marked “N“ : NV&LV models only . For HV model DO NOT connect.

Over-Current Protection Device (OCPD) for the AC side
To protect the inverter's AC connection line, we recommend installing a device for protection against over-current and leakage, with the following characteristics noted in Table 3.2 (The OCPD shall comply with IEC/EN60947-3):

NOTE
Use AL-CU transfer (bi-metallic) terminal or anti-oxidant grease with aluminum cables and terminals.

Inverter	Rated voltage(V)	Max. output current (Amps)	Current for protection device (A)
S6-GC3P150K07-NV-ND	220/380V,230/400V	250.6	300
S6-GC3P200K07-NV-ND	220/380V,230/400V	240.6	300
S6-GC3P80K07-LV-ND	220/230V	209.9	250
S6-GC3P100K07-LV-ND	220/230V	251.0	300

Table 3.2 Rating of grid OCPD

3.4.3.1 Connecting the inverter to the utility grid

All electrical installations must be carried out in accordance with the local standards and the National Electrical Code® ANSI/NFPA 70 or the Canadian Electrical Code® CSA C22.1. The AC and DC electric circuits are isolated from the enclosure. If required by section 250 of the National Electrical Code®, ANSI/NFPA 70, the installer is responsible for grounding the system.

The grid voltage must be within the permissible range. The exact operating range of the inverter is specified in section 10 “Specifications”.

3.4.3.2 Wiring procedure

CAUTION
RISK OF ELECTRIC SHOCK. Prior to starting the wiring procedure, ensure that the three-pole circuit breaker is switched off and cannot be reconnected.

NOTE
Damage or destruction of the inverter's electronic components due to moisture and dust intrusion will occur if the enclosure opening is enlarged.

NOTE
Use M10 crimp terminals to connect to the inverter AC terminals.

CAUTION
Risk of fire if two conductors are connected to one terminal. If a connection of two conductors to a terminal is made, a fire can occur. NEVER CONNECT MORE THAN ONE CONDUCTOR PER TERMINAL.

Inverter	Max AC cable length(m)
S6-GC3P150K07-NV-ND	140
S6-GC3P200K07-NV-ND	155
S6-GC3P80K07-LV-ND	90
S6-GC3P100K07-LV-ND	70

Table 3.3

Cable specification		Live wire	Groud wire
Traverse cross sectional area (mm^2)	Range	70-400	35-50
	Recommended	120	50
Conduit diameter (mm)	Range	30-75	30-75

NOTE
Cable ampacity of ground wire should be more than half of cable ampacity of live wire.

1) Strip the end of AC cable insulating jacket about 300mm then strip the end of each wire.

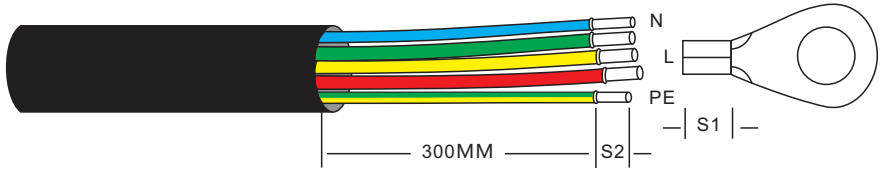

Figure 3.19 Strip AC cable

NOTE
S2 (insulation stripping length) is 2mm-3mm longer than S1.
(OT cable terminal crimping area)

2) Strip the insulation of the wire past the cable crimping area of the OT terminal, then use a hydraulic crimp tool to crimp the terminal. The crimped portion of the terminal must be insulated with heat shrinkable tube or insulating tape.

NOTE:
If chosing aluminum alloy cable, you must use copper aluminum transfer terminal in order to avoid direct contact between copper bar and Aluminum alloy cable. (Please select a copper aluminum transfer terminal based on your cable specification).

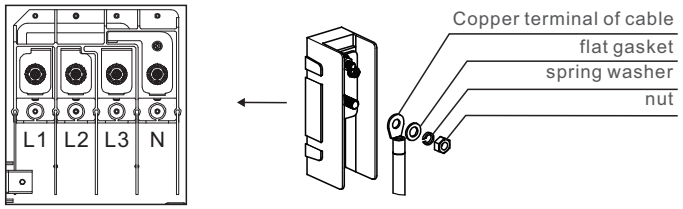

Figure 3.20 Copper aluminum transfer terminal

3) Leave the AC breaker disconnected to ensure it does not close unexpectedly.
4) Loosen the three screws on the front door of the AC junction box and open the door.

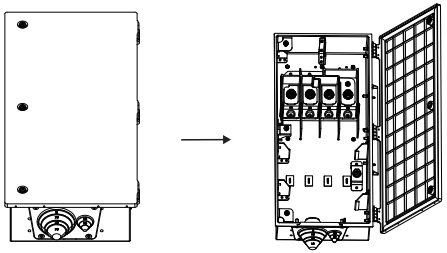

Figure 3.21 Open AC junction door

5) Loosen the screws on the bottom sealing plate and take the sealing plate out.

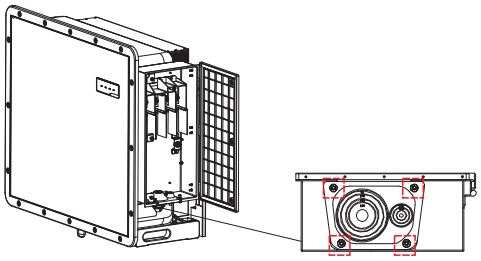

Figure 3.22 Take the sealing plate out

6) The AC cable passes through the sealing plate, and then the sealing plate is fixed to the inverter.

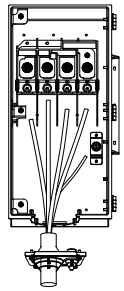

Figure 3.23 AC cables cross the sealing plate

7) Connect the cable to the AC terminal block in turn, using a socket wrench.
Tighten the screws on the terminal block. The torque is 20-30Nm.

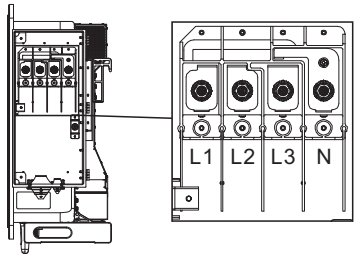

M6 5-7 N.m
M10 12-16 N.m
M12 20-30 N.m

Figure 3.24 Fasten the AC terminal

NOTE
Transformer needs to be connected during installation.

3. Installation

3.4.4 Meter Connection(optional)

The inverter can work with a three phase smart meter to achieve Export Power Management function and/or 24hour consumption monitoring function.

NOTE

To achieve Export Power Management function, the smart meter can be installed on either grid side or load side.
To achieve 24hour consumption monitoring function, the smart meter can only be installed on grid side.

Two types of meters are supported:
External CT Type Meter - 300A/5A CTs are supplied(DTSD1352-External CT Type).
Customer can place the order for a suitable meter from Solis Sales Reps.
Below are the connection diagrams of different meters connecting to different locations.
Detailed settings please refer to Section 7.5.11

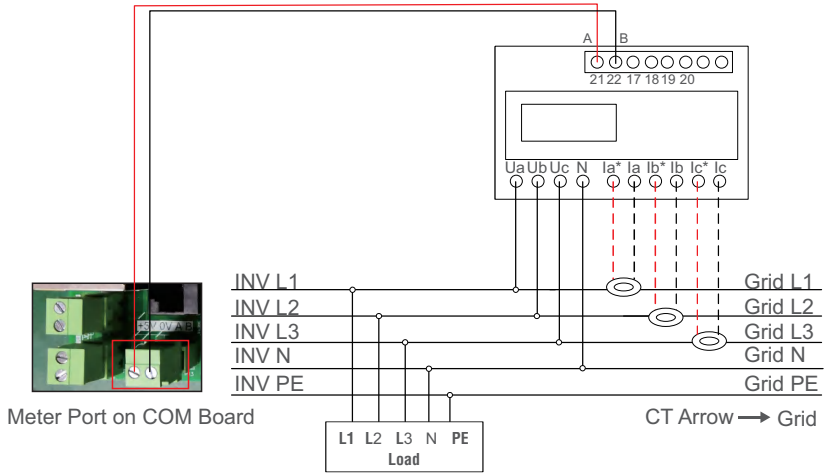

Figure 3.23 External CT Type Meter - “Meter in Grid”

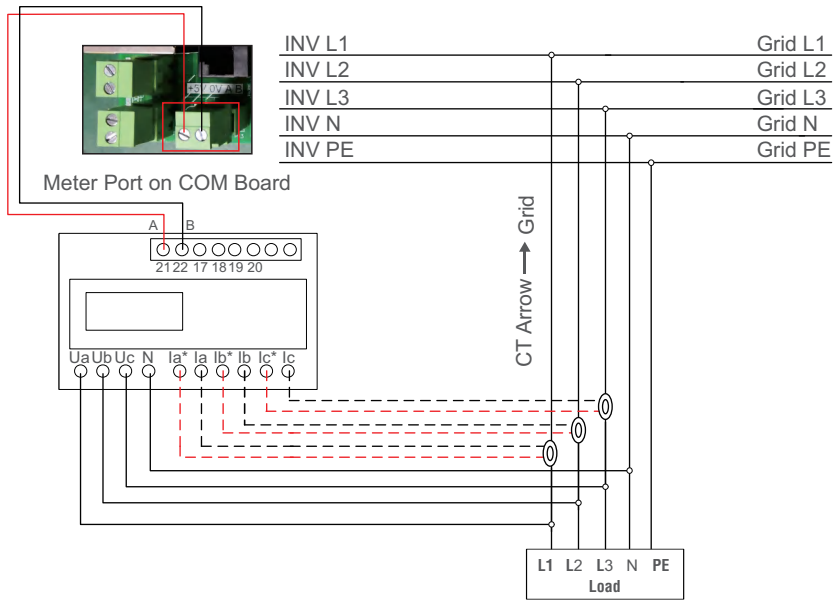

Figure 3.24 External CT Type Meter - “Meter in Load”

There are 5 communication terminals on the inverters.
COM1 is a USB connector reserved for WiFi/Cellular datalogger.
2*RS485 ports are for RS485 communication between inverters.
DRM port is for DRM connection.
Meter/CT port is reserved for further development.
Detailed connection please refer to 4.2 section.

4.1 RS485 and PLC communication connection

Monitoring system for multiple inverters

Multiple inverters can be monitored through RS-485 daisy chain configuration.

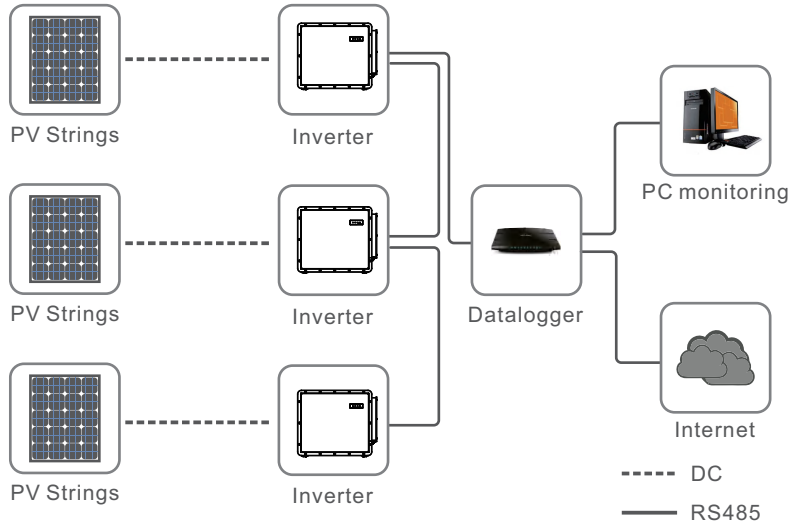

Figure 4.1 Multiple inverter monitoring system(RS485)

NOTE
One of the RS485 and PLC communication methods is available.

4. Comm. & Monitoring

RS-485 communication through terminal board.

The cross sectional area of the conductor wire for terminal board connection should be 0.2-1.5mm.

The outer diameter of the cable may be 5mm-10mm.

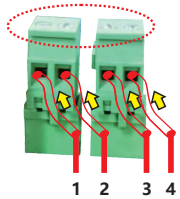

Figure 4.2

NO.	Port definition	Description
1	RS485A1 IN	RS485A1,RS485 differential signal+
2	RS485B1 IN	RS485B1,RS485 differential signal-
3	RS485A2 OUT	RS485A2,RS485 differential signal+
4	RS485B2 OUT	RS485B2,RS485 differential signal-

Connection of Terminal board.

a. Strip the insulation and shield to a suitable length. Use diagram below as a guide. (see Figure 4.3).

b. Remove the cap nut from the waterproof cable glands labeled at the bottom of the inverter. Remove the plug from the fitting. (see Figure 4.4).

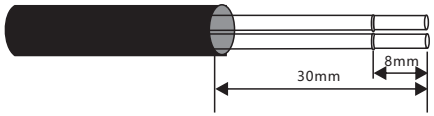

Figure 4.3

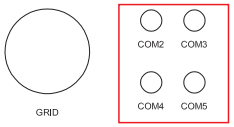

Figure 4.4

c. Insert the cable through the cap nut for each port. COM2(RS485 IN) COM3(RS485 OUT).
d. Remove the terminal block on user interface board(See Figure 4.2).
e. Insert the cable into the terminal board and tighten the screws in dotted area(See Figure 4.2).
f. Replace terminal block onto interface board.

PLC is available for multiple inverter monitoring.

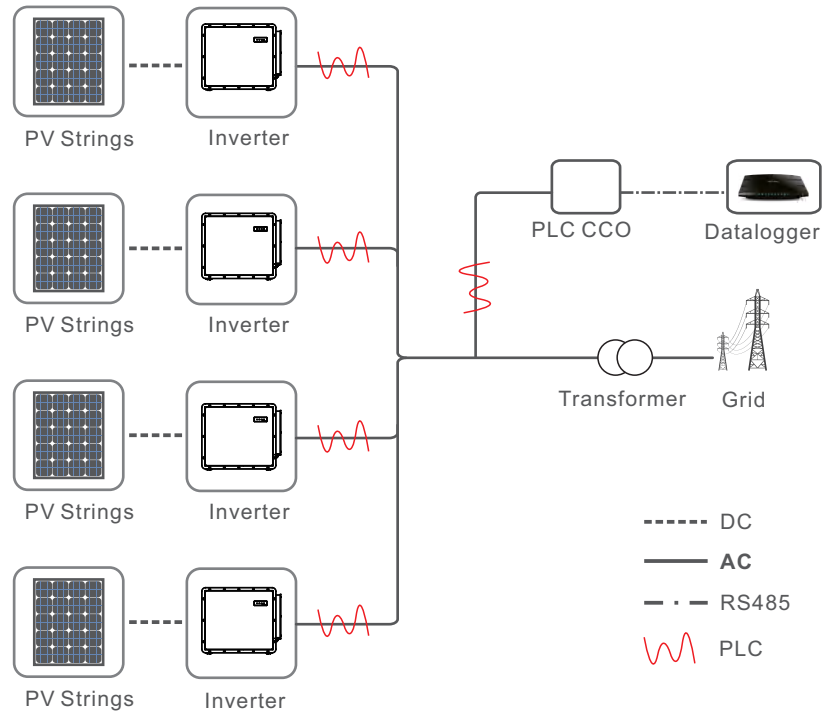

Figure 4.5 Multiple inverter monitoring system(PLC)

4. Comm. & Monitoring

4.2 Logic interface connection

Logic interface is required by some local regulations that can be operated by a simple switch or contactor(Not available in South Africa).
When the switch is closed the inverter can operated normally. When the switch is opened, the inverter will reduce it's output power to zero within 5s.
Pin5 and Pin6 of RJ45 terminal is used for the logic interface connection.

Please follow below steps to assemble RJ45 connector.

1.Insert the network cable into the communication connection terminal of RJ45.

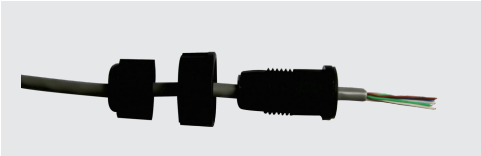

Figure 4.6 RJ45 communication connection terminals

2.Use the network wire stripper to strip the insulation layer of the communication cable. According to the standard line sequence of figure 4.7 connect the wire to the plug of RJ45, and then use a network cable crimping tool to make it tight.

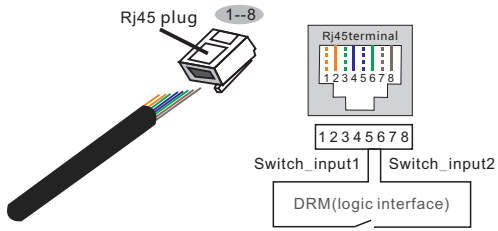

Correspondence between the cables and the stitches of plug, Pin5 and Pin6 of RJ45 terminal is used for the logic interface, other Pins are reserved.

Pin 1: Reserved; Pin 2: Reserved
Pin 3: Reserved; Pin 4: Reserved
Pin 5: Switch_input1; Pin 6: Switch_input2
Pin 7: Reserved; Pin 8: Reserved

Figure 4.7 Strip the insulation layer and connect to RJ45 plug

3.Connect RJ45 to DRM (logic interface) .

4.3 Third part Generator controller

Matched Generator controller brand : DEIF

5.1 Start-up procedure

To start-up the inverter, it is mandatory that the steps below are followed in the exact order outlined.

1). Ensure the commissioning checks in Section 5 have been performed.

2). Switch the AC switch ON.

3). Switch the DC switch ON. If the PV array (DC) voltage is higher than the inverter's start-up voltage, the inverter will turn on. The red DC POWER LED and LCD will be continuously lit.

4). Solis inverters are powered from the DC side. When the inverter detects DC power that is within start-up and operating ranges, the inverter will turn on. After turn-on, the inverter will check internal parameters, sense and monitor AC voltage, hertz rate and the stability of the supply grid. During this period, the green OPERATION LED will flash and the LCD screen will show INITIALIZING. This tells the operator that the inverter is preparing to generate AC power.

5). After the locally mandated delay (300 seconds for IEEE-1547 compliant inverters), the inverter will start generating AC power. The green OPERATION LED will light continuously and the LCD screen will show GENERATING.

CAUTION

The inverter's surface temperature can reach up to 70℃ (162⁰ F). To avoid risk of burns, do not touch the surface when the inverter is in the operational mode. Additionally, the inverter must be installed out of the reach of children.

5. Start and Shutdown

5.2 Shutdown procedure

To stop the inverter, it is mandatory that the steps below are followed in the exact order outlined.

1). Select "Grid Off" in the Advanced Setting of Inverter LCD.

2). Turn off the AC Switch between Solis inverter and Grid.

3). Wait approximately 30 seconds (during this time, the AC side capacitors are dissipating energy). If the inverter has DC voltage above the start-up threshold, the red POWER LED will be lit. Switch the DC switch OFF.

4). Confirm all LED's switch OFF (~one (1) minute).

CAUTION

Although the inverter DC disconnect switch is in the OFF position and all the LED's are OFF, operators must wait five (5) minutes after the DC power source has been disconnected before opening the inverter cabinet. DC side capacitors can take up to five (5) minutes to dissipate all stored energy.

6.1 APP Download

Users need to download the APP before installing it for the first time.
There are three ways to download and install the latest APP:
1. You can visit **www.soliscloud.com** to download the latest version APP.
2. You can search "**Soliscloud**" in Google Play or App Store.
3. You can scan this QR code below to download "**Soliscloud**".

6.2 Log in the APP via bluetooth

Step 1: **Connect with Bluetooth.**
Turn on Bluetooth switch on your mobile phone and then open the Soliscloud APP.
Click "More Tools"->"Local Operation"->"Connect with Bluetooth"

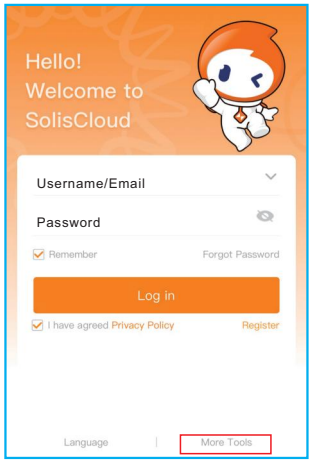

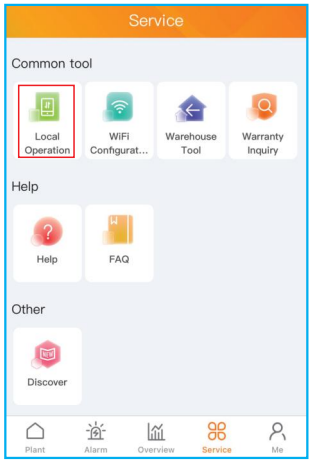

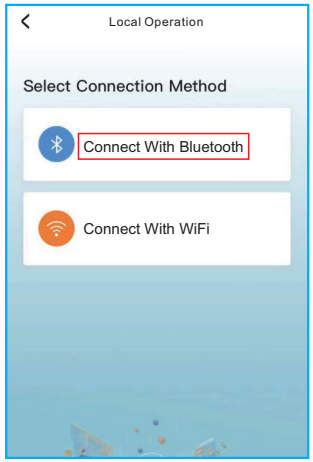

Step 2: Select the Bluetooth signal from the inverter. (Bluetooth Name: INV-Inverter SN)

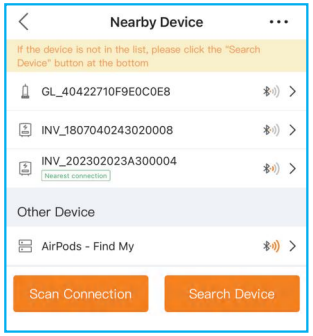

6. Normal operation

Step 3: **Login account.**
If you are the installer, please select the account type as Installer. If you are the plant owner, please select the account type as owner. Then set your own initial password for control verification. (The first log-in must be finished by installer in order to do the initial set up)

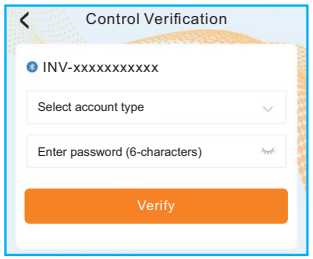

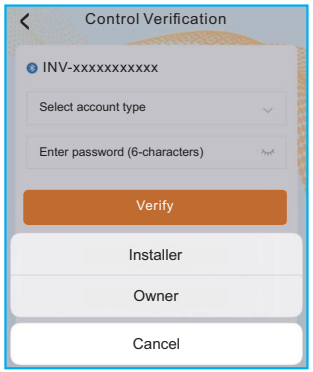

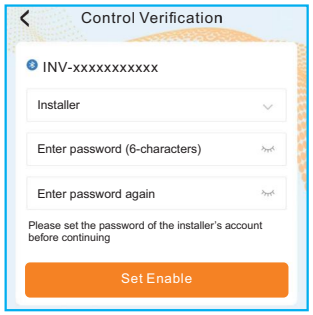

Step 4: Perform the setting configuration for Grid CodeSetting, etc.
Step 5: Switch on the AC breaker, wait till the inverter start generating.

The APP interface contains 4 sections:

1. Home
2. Info
3. Alarm
4. Settings

6.3 Home Page

The home page contains the power and energy data of the inverter.
The PV data and AC data are also available under this section.

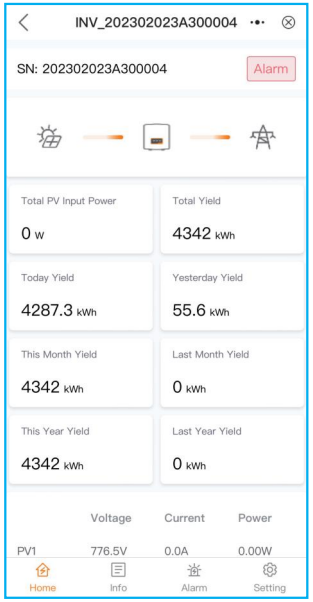

6. Normal operation

6.4 Info Page

Info page displays the general information of the inverter such as inverter serial number, firmware version, grid code, etc.

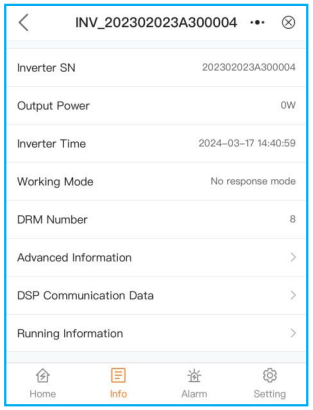

6.5 Alarm Page

Alarm page contains the alarm code of the inverter and its corresponding troubleshooting methods.

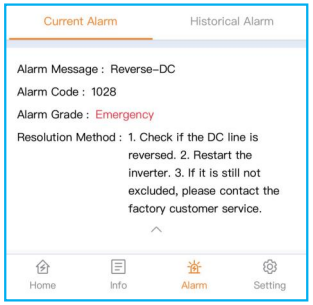

6.6 Setting Page

Setting page contains all the setting options of the inverter.

Functions	Setting Path
Switch on/off the inverter	Settings -> “Power ON” & ”Power OFF”
Change inverter time setting	Settings -> Inverter Setting-> Inverter Parameter Setting -> Inverter Time Setting
Change inverter output power percentage or power factor	Settings -> Inverter Setting-> Inverter Power Setting
Set grid code and protection parameters	Settings -> Grid Parameter Setting -> Grid Code Setting
Set Export Power control	Settings -> EPM Setting
Set grid code related working modes	Settings -> Inverter Work Mode Setting -> Work Mode

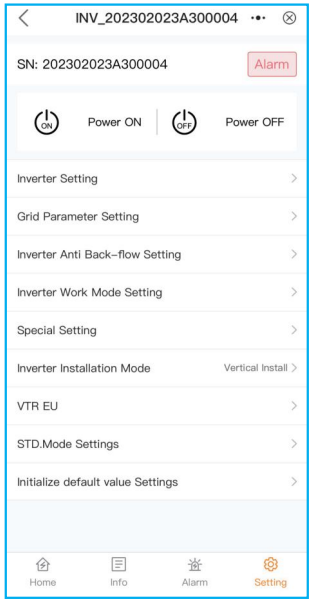

NOTE:
The inverter is by default setting with grid code which complies with local requirements. If there is need to modify the protection limits, please consult and approve by your local grid operator.

Solis Three Phase Inverter does not require any regular maintenance. However, cleaning the dust on heat-sink will help the inverter to dissipate the heat and increase its life time. The dust can be removed with a soft brush.

CAUTION:
Do not touch the inverter's surface when it is operating. Some parts of the inverter may be hot and cause burns. Turn off the inverter (refer to Section 5.2) and wait for a cool-down period before any maintenance or cleaning operation.

The LCD and the LED status indicator lights can be cleaned with a damp cloth if they are too dirty to be read.

NOTE:
Never use any solvents, abrasives or corrosive materials to clean the inverter.

7.1 Anti-PID Function

Solis Three phase Inverters integrates optional Anti-PID module and it can recover the PID effect during night thus protect the PV system from degradation.

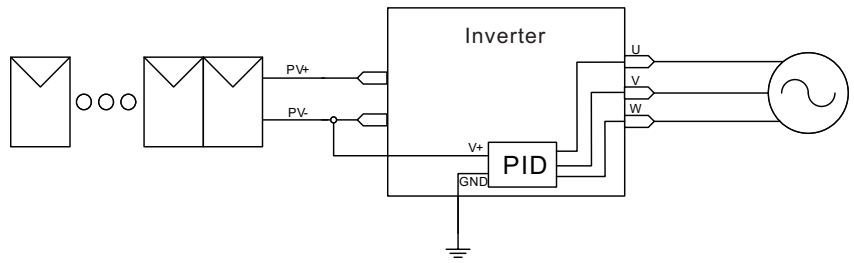

Figure 7.1

The Anti-PID module repairs the PID effect of the PV model at night. When operating, the inverter LCD screen displays " PID-repairing " information, and the red light is on.
The Anti-PID function is always ON when AC is applied.
If maintenance is required and turn off the AC switch can disable the Anti-PID function.

WARNING :
The PID function is automatic. When the DC bus voltage is lower than 260Vdc, the PID module will start creating 650 Vdc between PV- and ground.
No need any control or settings

7. Maintenance

NOTE:
If you need to maintain the inverter at night, please turn off the AC switch first, then turn off the DC switch, and wait 20 minutes before you do other operations.

7.2 Fan Maintenance

If the fan does not work properly, the inverter will not be cooled effectively.
and it may affect the effective operation of the inverter .
Therefore, it is necessary to clean or replace a broken fan as follows:

1. Turn off the “Grid ON/OFF” switch on the inverter LCD.
2. Disconnect the AC power.
3. Turn the DC switch to "OFF" position.
4. Wait for 15 minutes at least.
5. Remove the 2 screws on the fan plate.
6. pull out the fan module slowly and unplug the power plug of the fan after pulling out around 400mm.
7. Clean and replace the broken fan.
8. Connect the electrical wire and reinstall the fan. Restart the inverter.

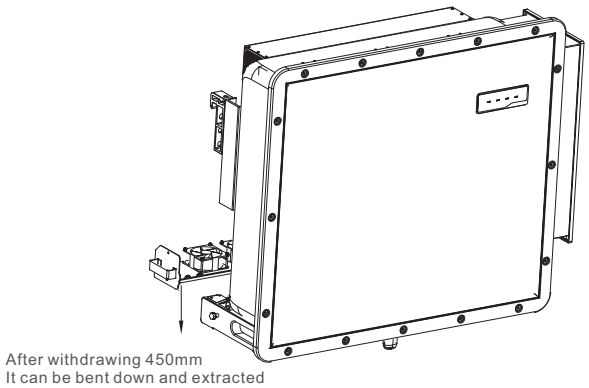

Figure 7.2

8. Troubleshooting

The inverter is designed in accordance with the most important international grid-tied standards and safety and electromagnetic compatibility requirements. Before delivering to the customer, the inverter has been subjected to several tests to ensure its optimal operation and reliability.

In case of failure, the LCD screen will display an alarm message. In this case, the inverter may stop feeding into the grid. The failure descriptions and their corresponding alarm messages are listed in Table 8.1:

Alarm Message	Failure description	Solution
No power	Inverter no power on LCD	1.Check PV input connections 2.Check if the DC input voltage higher than 620V 3.Check if PV+/- is reversed
LCD show initializing all the time	Can not start-up	1.Check if the connector on main board or power board are fixed. 2.Check if the DSP connector to power board are fixed.
OV-G-V01/02/03/04	Over grid voltage	1.Resistant of AC cable is too high. Change bigger size grid cable 2.Adjust the protection limit if it’s allowed by electrical company.
UN-G-V01/02	Under grid voltage	1.Use user define function to adjust the protection limit if it’s allowed by electrical company.
OV-G-F01/02	Over grid frequency	
UN-G-F01/02	Under grid frequency	
G-IMP	High grid impedance	
NO-GRID	No grid voltage	1.Check connections and grid switch. 2.Check the grid voltage inside inverter terminal.
OV-DC01/02/03/04	Over DC voltage	1.Reduce the module number in series
OV-BUS	Over DC bus voltage	1.Check inverter inductor connection 2.Check driver connection
UN-BUS01/02	Under DC bus voltage	
GRID-INTF01/02	Grid interference	1.Restart inverter 2.Change power board
OV-G-I	Over grid current	
IGBT-OV-I	Over IGBT current	
DC-INTF OV-DCA-I	DC input overcurrent	1.Restart inverter 2.Identify and remove the string to the fault MPPT 2.Change power board
IGFOL-F	Grid current tracking fail	1.Restart inverter or contact installer.
IG-AD	Grid current sampling fail	
OV-TEM	Over Temperature	1.Check inverter surrounding ventilation. 2.Check if there’s sunshine direct on inverter in hot weather.

8. Troubleshooting

Alarm Message	Failure description	Solution
INI-FAULT	Initialization system fault	1.Restart inverter or contact installer.
DSP-B-FAULT	Comm. failure between main and slave DSP	
12Power-FAULT	12V power supply fault	
PV ISO-PRO 01/02	PV isolation protection	1.Remove all DC input, reconnect and restart inverter one by one. 2.Identify which string cause the fault and check the isolation of the string.
ILeak-PRO 01/02/03/04	Leakage current protection	1.Check AC and DC connection 2.Check inverter inside cable connection.
RelayChk-FAIL	Relay check fail	1.Restart inverter or contact installer.
DCinj-FAULT	High DC injection current	
Reve-DC	One of the DC string is reversely connected	1. Please check the inverters' PV string polarity, if there are strings reversely connected wait for the night when the solar irradiance is low and the PV string current down below 0.5A. Turn off the two DC switchs and fix the polarity issue.
Screen OFF with DC applied	Inverter internally damaged	1.Do not turn off the DC switches as it will damage the inverter. 2.Please wait for the solar irradiance reduces and confirm the string current is less than 0.5A with a clip-on ammeter and then turn off the DC switches. 3.Please note that any damages due to wrong operations are not covered in the device warranty.

Table 8.1 Fault message and description

NOTE

Before grid connection, if the string has negative current, it means the voltage between the two strings of one MPPT is unbalanced.
One of two string may have more PV panels than another one.

NOTE

If the inverter displays any alarm message as listed in Table 8.1; please turn off the inverter (refer to Section 5.2 to stop your inverter) and wait for 15 minutes before restarting it (refer to Section 5.1 to start your inverter). If the failure persists, please contact your local distributor or the service center. Please keep ready with you the following information before contacting us.

1. Serial number of Solis Three Phase Inverter;
2. The distributor/dealer of Solis Three Phase Inverter (if available);
3. Installation date.
4. The description of problem (i.e. the alarm message displayed on the LCD and the status of the LED status indicator lights. Other readings obtained from the Information submenu (refer to Section 5.2) will also be helpful.);
5. The PV array configuration (e.g. number of panels, capacity of panels, number of strings, etc.);
6. Your contact details.

Model	S6-GC3P150K07-NV-ND
Max. DC input voltage (Volts)	1100
Rated DC voltage (Volts)	600
Start-up voltage (Volts)	180
MPPT voltage range (Volts)	160...1000
Max. input current (Amps)	7*54
Max. short circuit current (Amps)	7*75
MPPT number/Max input strings number	7/21
Rated output power (Watts)	150000
Max. output power (Watts)	165000
Max. apparent output power (VA)	165000
Rated grid voltage (Volts)	3/N/PE, 220/380, 230/400
Rated grid output current (Amps)	216.5/227.9
Max. output current (Amps)	250.6
Power Factor (at rated output power)	0.8leading~0.8lagging
THDi (at rated output power)	<3%
Rated grid frequency (Hertz)	50/60
Max.efficiency	98.8%
EU efficiency	98.3%
Dimensions (W*H*D)	1035.5* 869* 396 mm
Weight	105kg
Topology	Transformerless
Self consumption (night)	< 2W
Operating ambient temperature range	-30℃...+60℃
Relative humidity	0~100%
Ingress protection	IP66
Cooling concept	Intelligent redundant cooling
Max.operation altitude	4000m
Grid connection standard	G99, IEC61727, EN50549-1/2, VDE4110
Safty/EMC standard	IEC/EN 62109-1/-2, IEC/EN 61000-6-2/-4
DC connection	MC4 connector
AC connection	OT Terminal (max 400 mm²)
Display	LED+Bluetooth
Communication connections	RS485, Optional: Wifi, GPRS , PLC
Warranty	5 years (extend to 20 years)

9. Specifications

Model	S6-GC3P200K07-HV-ND
Max. DC input voltage (Volts)	1100
Rated DC voltage (Volts)	720
Start-up voltage (Volts)	180
MPPT voltage range (Volts)	160...1000
Max. input current (Amps)	7*54
Max. short circuit current (Amps)	7*75
MPPT number/Max input strings number	7/21
Rated output power (Watts)	200000@30℃, 180000@40℃, 160000@50℃
Max. output power (Watts)	200000
Max. apparent output power (VA)	200000
Rated grid voltage (Volts)	3/PE, 480
Rated grid output current (Amps)	240.6
Max. output current (Amps)	240.6
Power Factor (at rated output power)	0.8leading~0.8lagging
THDi (at rated output power)	<3%
Rated grid frequency (Hertz)	50/60
Max.efficiency	98.8%
EU efficiency	98.3%
Dimensions (W*H*D)	1035.5* 869* 396 mm
Weight	105kg
Topology	Transformerless
Self consumption (night)	< 2W
Operating ambient temperature range	-30℃...+60℃
Relative humidity	0~100%
Ingress protection	IP66
Cooling concept	Intelligent redundant cooling
Max.operation altitude	4000m
Grid connection standard	G99, IEC61727, EN50549-1/2, VDE4110
Safty/EMC standard	IEC/EN 62109-1/-2, IEC/EN 61000-6-2/-4
DC connection	MC4 connector
AC connection	OT Terminal (max 400 mm²)
Display	LED+Bluetooth
Communication connections	RS485, Optional: Wifi, GPRS , PLC
Warranty	5 years (extend to 20 years)

Model	S6-GC3P80K07-LV-ND
Max. DC input voltage (Volts)	800
Rated DC voltage (Volts)	450
Start-up voltage (Volts)	180
MPPT voltage range (Volts)	160...1000
Max. input current (Amps)	7*54
Max. short circuit current (Amps)	7*75
MPPT number/Max input strings number	7/21
Rated output power (Watts)	80000
Max. output power (Watts)	88000
Max. apparent output power (VA)	88000
Rated grid voltage (Volts)	3/N/PE, 220/230
Rated grid output current (Amps)	209.9
Max. output current (Amps)	209.9
Power Factor (at rated output power)	0.8leading~0.8lagging
THDi (at rated output power)	<3%
Rated grid frequency (Hertz)	50/60
Max.efficiency	98.8%
EU efficiency	98.3%
Dimensions (W*H*D)	1035.5* 869* 396 mm
Weight	105kg
Topology	Transformerless
Self consumption (night)	< 2W
Operating ambient temperature range	-30℃...+60℃
Relative humidity	0~100%
Ingress protection	IP66
Cooling concept	Intelligent redundant cooling
Max.operation altitude	4000m
Grid connection standard	G99, IEC61727, EN50549-1/2, VDE4110
Safty/EMC standard	IEC/EN 62109-1/-2, IEC/EN 61000-6-2/-4
DC connection	MC4 connector
AC connection	OT Terminal (max 400 mm²)
Display	LED+Bluetooth
Communication connections	RS485, Optional: Wifi, GPRS , PLC
Warranty	5 years (extend to 20 years)

9. Specifications

Model	S6-GC3P100K07-LV-ND
Max. DC input voltage (Volts)	800
Rated DC voltage (Volts)	450
Start-up voltage (Volts)	180
MPPT voltage range (Volts)	160...1000
Max. input current (Amps)	7*54
Max. short circuit current (Amps)	7*75
MPPT number/Max input strings number	7/21
Rated output power (Watts)	100000
Max. output power (Watts)	100000
Max. apparent output power (VA)	100000
Rated grid voltage (Volts)	3/N/PE, 220/230
Rated grid output current (Amps)	251.0
Max. output current (Amps)	251.0
Power Factor (at rated output power)	0.8leading~0.8lagging
THDi (at rated output power)	<3%
Rated grid frequency (Hertz)	50/60
Max.efficiency	98.8%
EU efficiency	98.3%
Dimensions (W*H*D)	1035.5* 869* 396 mm
Weight	105kg
Topology	Transformerless
Self consumption (night)	< 2W
Operating ambient temperature range	-30℃...+60℃
Relative humidity	0~100%
Ingress protection	IP66
Cooling concept	Intelligent redundant cooling
Max.operation altitude	4000m
Grid connection standard	G99, IEC61727, EN50549-1/2, VDE4110
Safty/EMC standard	IEC/EN 62109-1/-2, IEC/EN 61000-6-2/-4
DC connection	MC4 connector
AC connection	OT Terminal (max 400 mm²)
Display	LED+Bluetooth
Communication connections	RS485, Optional: Wifi, GPRS , PLC
Warranty	5 years (extend to 20 years)