Connecting Strength

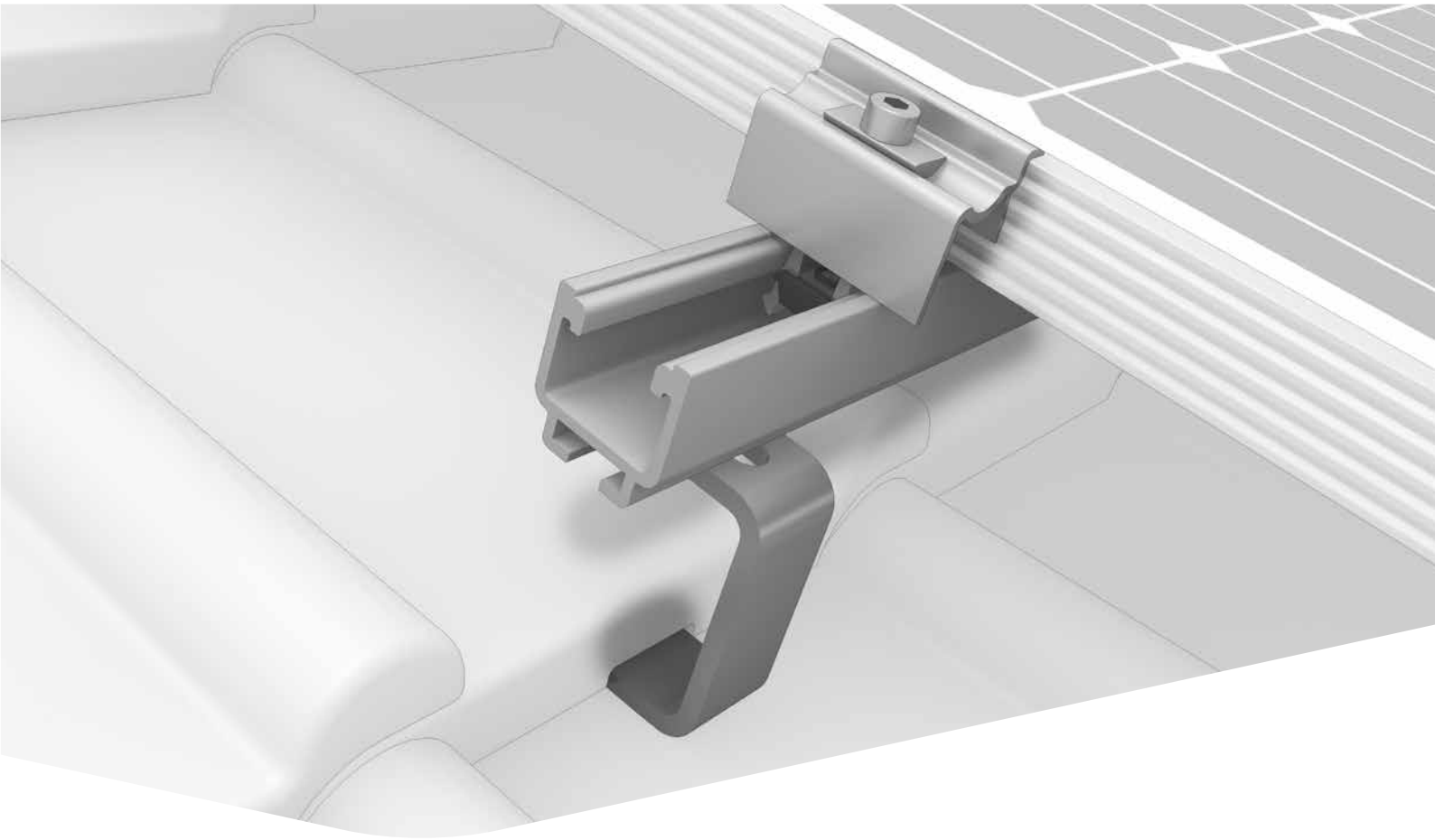

Assembly instructions

SolidRail System

Roof hooks pantiles

Content

- **Tools overview** **3**
- **General safety information** **4**
- **The following guidelines apply** **5**
  - Planning with K2 Base 5
  - Roof requirements 5
  - Important mounting instructions 5
- **Components** **6**
  - Portrait assembly 6
  - Additional items landscape assembly 8
- **Assembly** **9**
  - Notes on rooftop insulation 9
  - Portrait 10
  - Thermal separation 13
- **Assembly Landscape** **14**
  - Second rail layer 14
  - Thermal separation 15
- **Optional assembly steps** **16**
  - Height compensation on the roof hook bracket 16
  - Cable managment 16
- **Notes** **17**

Tested quality - multiple certifications

K2 Systems stands for secure connections, top quality and maximum precision. Our customers and business partners have known this for a long time. Independent bodies have tested, verified and certified our competencies and components.

You can find our quality and product certificates at
k2-systems.com/en/technical-information

Tools overview

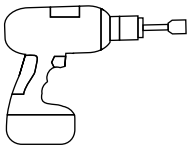

6 mm

15 mm

25 / 40

6 - 40 Nm
(4.5 - 22.2 lb-ft)

6 mm

15 mm

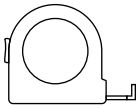
≥ 3.0 m

≥ 6.0 m

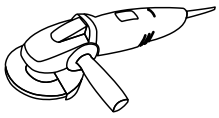

General safety information

Please note that our general mounting instructions must be followed at all times and can be viewed online at k2-systems.com

- The equipment may only be installed and operated by qualified and adequately trained installers.
- Prior to installation, ensure that the product complies with on-site static loading requirements. For roof-mounted systems, the roof load-bearing capacity must always be checked.
- National and local building regulations and environmental requirements must be adhered to.
- Compliance with health and safety regulations, accident prevention guidelines and applicable standards is required.
  - Protective equipment such as safety helmet, boots and gloves must be worn.
  - Roofing works must be in accordance with roofing regulations utilising fall protection safeguards when eaves height exceeds 3 m.
  - At least two people must be present for the duration of the installation work in order to provide rapid assistance in the event of an emergency.
- K2 mounting systems are continuously developed and improved and the installation process may thereby change at any time. Prior to installation consult our website at www.k2-systems.com/en/technical-information for up-to-date instructions. We can send you the latest version on request.
- The assembly instructions of the module manufacturer must be adhered to.
- Equipotential bonding/grounding/earthing between individual parts is to be performed according to country specific standards, as well as national laws and regulations.
- At least one copy of the assembly instructions should be available on site throughout the duration of the installation.
- Failure to adhere to our general safety and assembly instructions and not using all system components, K2 is not liable for any resulting defects or damages. We do not accept liability for any damage resulting in the use of competitor's parts. Warranty is excluded in such cases.
- K2 Systems GmbH reserves the right to exclude liability in case of disregard of our General Safety Instructions as well as in case of installation or mounting of components of a competitor.
- If all safety instructions are adhered to and the system is correctly installed, there is a product warranty entitlement of 12 years! We strongly recommend reviewing our terms of guarantee, which can be viewed at k2-systems.com/en/warranty- terms-and-conditions
  We will also send this information on request.
- Dismantling of the system is performed in reverse order to the assembly.
- K2 stainless steel components are available in different corrosion resistance classes. Each structure or component must be carefully checked for possible corrosion exposure.

The following guidelines apply

This System can be used without further testing by K2 systems in the following standard conditions. It is also suitable for higher requirements. However, if a value exceeds the standard conditions, please contact K2 Systems.

Planning with K2 Base

We recommend our free online software K2 Base for the planning. In five steps you can plan the right assembly system and get an installation recommendation, a bill of materials and the structural analysis report. Simply register and start planning: base.k2-systems.com

Roof requirements

- The sufficient holding force of the roof covering at the support or substructure must be ensured on site.
- Roof pitch of 5 - 75°

Important mounting instructions

- On-site general standards and regulations for lightning protection must be observed and consultation with a specialist to create a lightning protection concept is recommended (use lightning protection clamp if necessary).
- We recommend a thermal separation after maximum of 17.6 m.
- A minimum mounting distance of 50 mm from the end of the rail / rail joint to the module frame.
- Rail cut SolidRail ≥ 700 mm
- Tightening torque for all module clamps 16 Nm
- The SingleRail 36/50 RailConnector must always be positioned between two roof hooks; meaning, a cantilever extension at the rail edge outside the last roof hook is not permitted
- For manufacturer information regarding clamps see the manufacturing module data sheet.
- In order to avoid damage under high snow loads, replace the clay/concrete roof tile with metal roof plate or sheet metal replacement tile under the bracket of the roof hook.
- Do not step on roof hooks or rails, as these are not climbing assists.
- Sizing and positioning of the wood screws are subject to the relevant regulations.
- Dimensioning and positioning of the wood-screws subject to the European Technical approvals (ETA) of the screw manufacturers.
- Special requirements apply with on-rafter insulation or counter battening: Special fit-for-purpose spacer screws have to be used.

Components

Portrait assembly

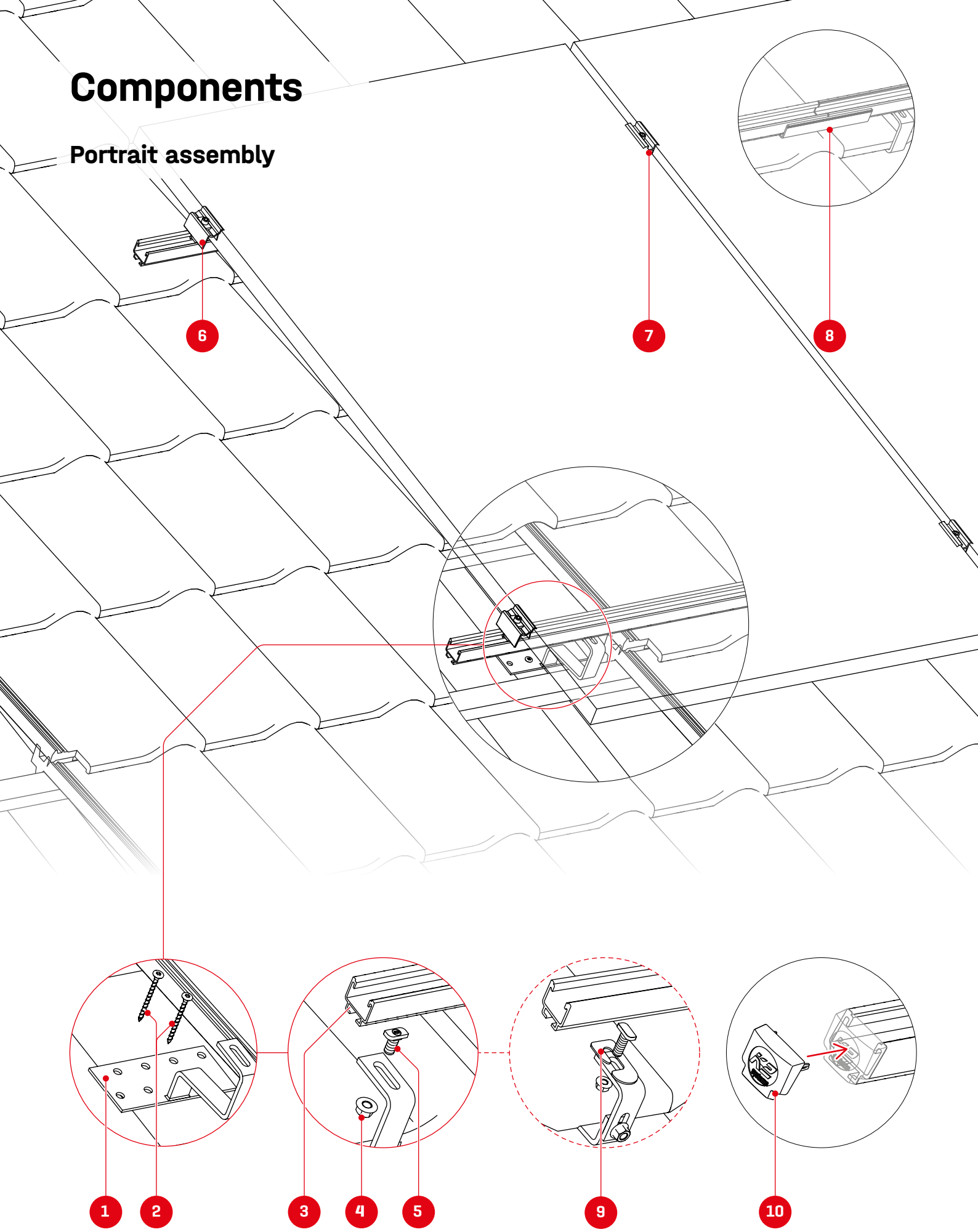

1 Item number project specific!
Roof hooks

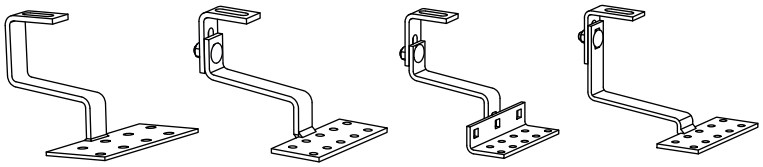

Stainless steel roof hook | Vario 1 | Vario 2 | Coppo

2 Item number project specific!
Solar wood screw / Wood screw, flange head

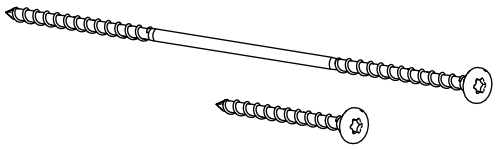

3 Item number project specific!
Mounting rail SolidRail

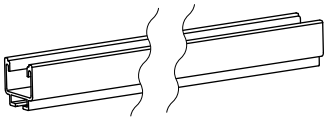

4 1000042
Hexagon flange nut with serration, M10

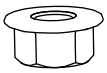

5 Item number project specific!
T-bolt M10×20 / M10×30

6 Item number project specific!
Modul end clamps

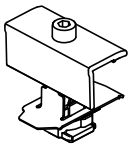

K2 Clamp EC
25 - 40

XS Clamp EC
30 / 33 / 35

7 Item number project specific!
Module middle clamps

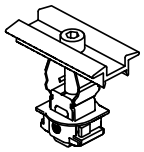

K2 Clamp MC
25 - 40

XS Clamp MC
30 / 33–35

8 Item number project specific!
SolidRail Connector Set

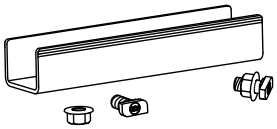

9 1000005
Distance plate for roof hooks

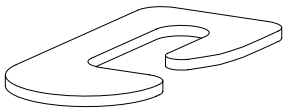

10 Item number project specific!
SolidRail EndCap

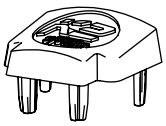

Optional

2002870
Cable Manager

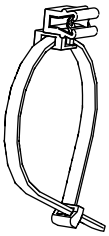

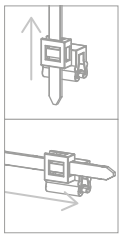

Components

Additional items landscape assembly

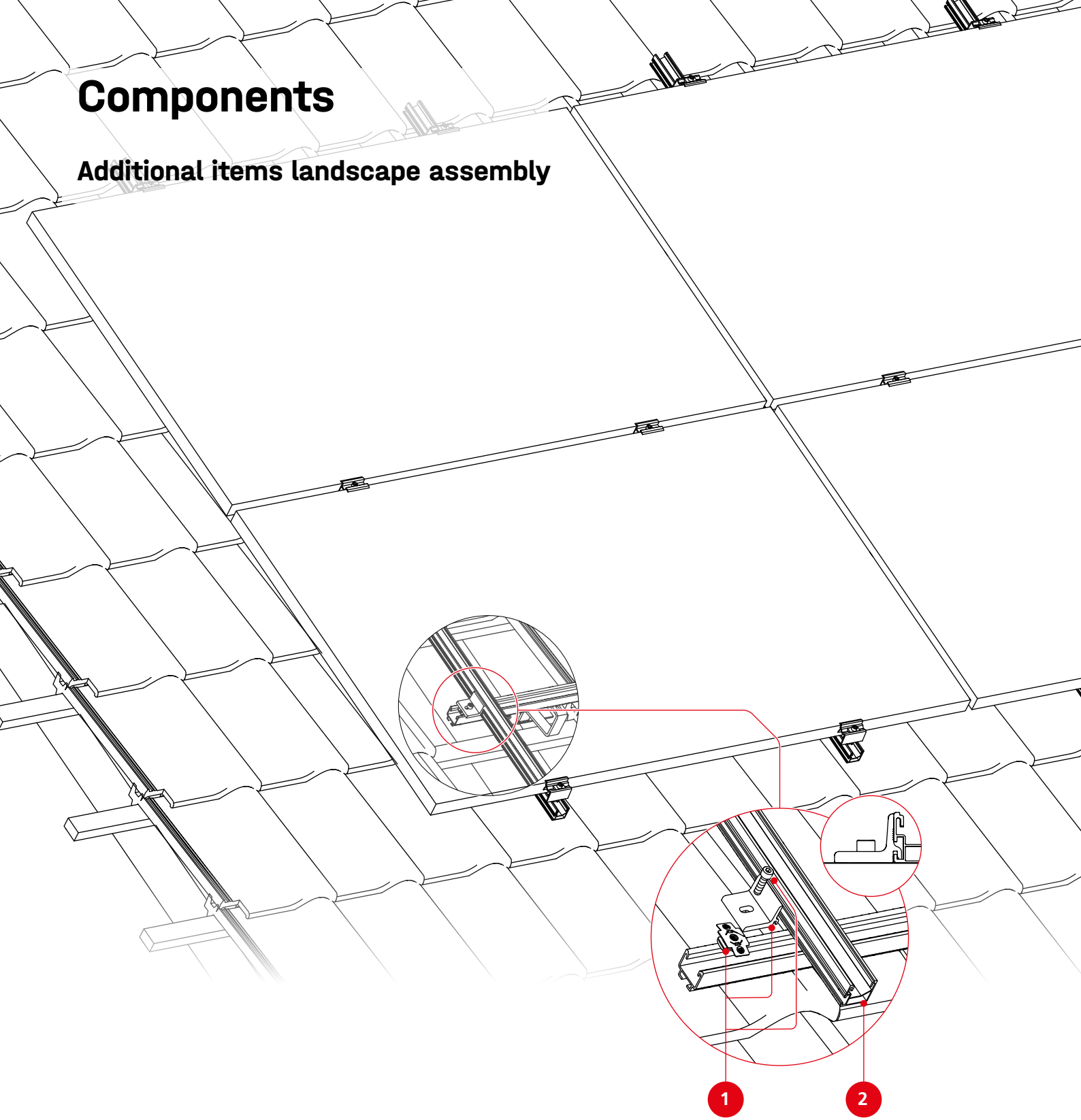

1 2003145 / 1004110
Climber 36/50 Set / CrossConnector Set

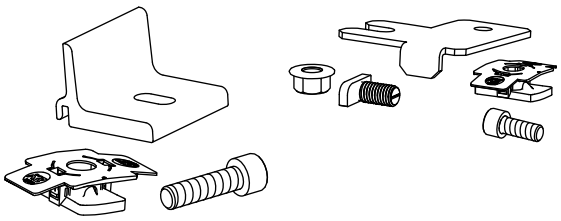

2 Item number project specific!
SingleRail 36/50

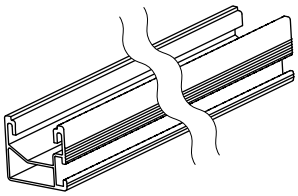

2003605/2001976
SingleRail 36/50 RailConnector

SingleRail 36/50 Connector Set

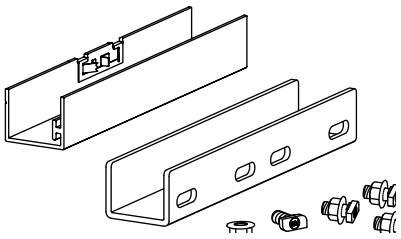

Assembly

Notes on rooftop insulation

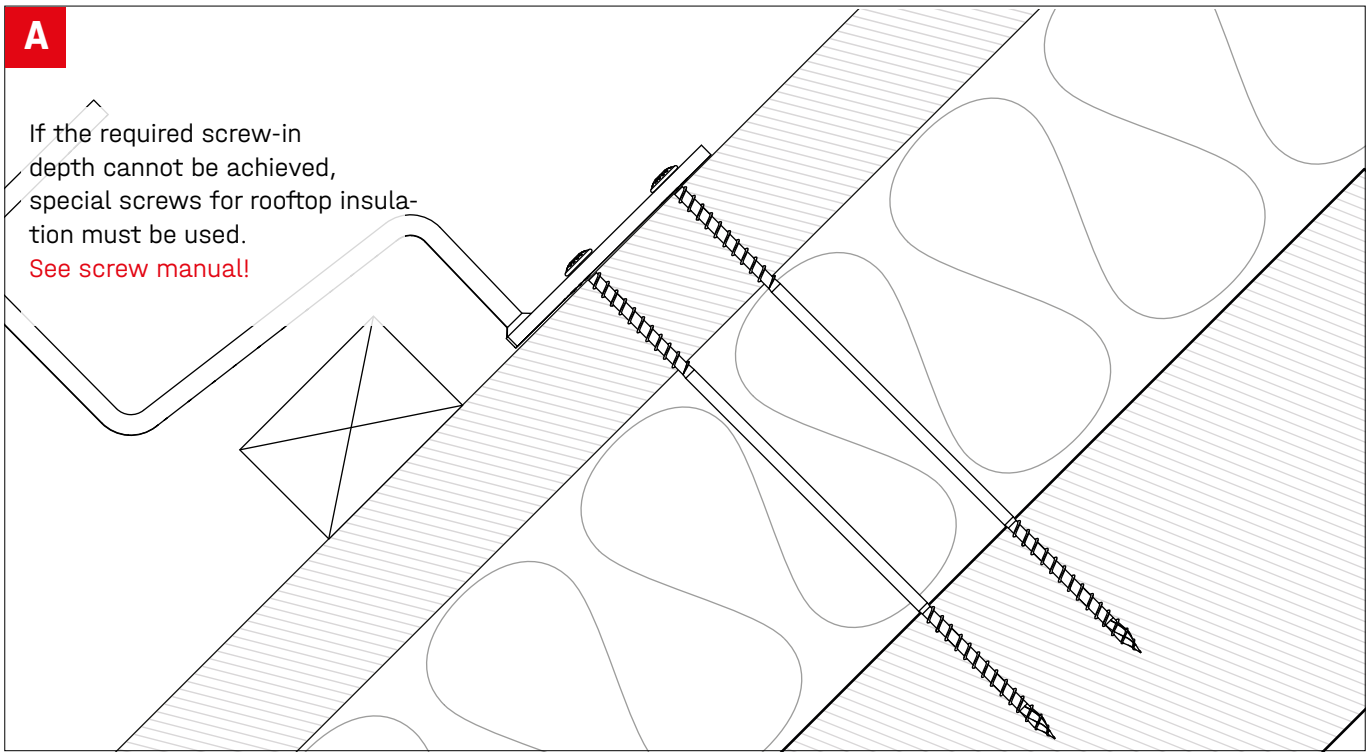

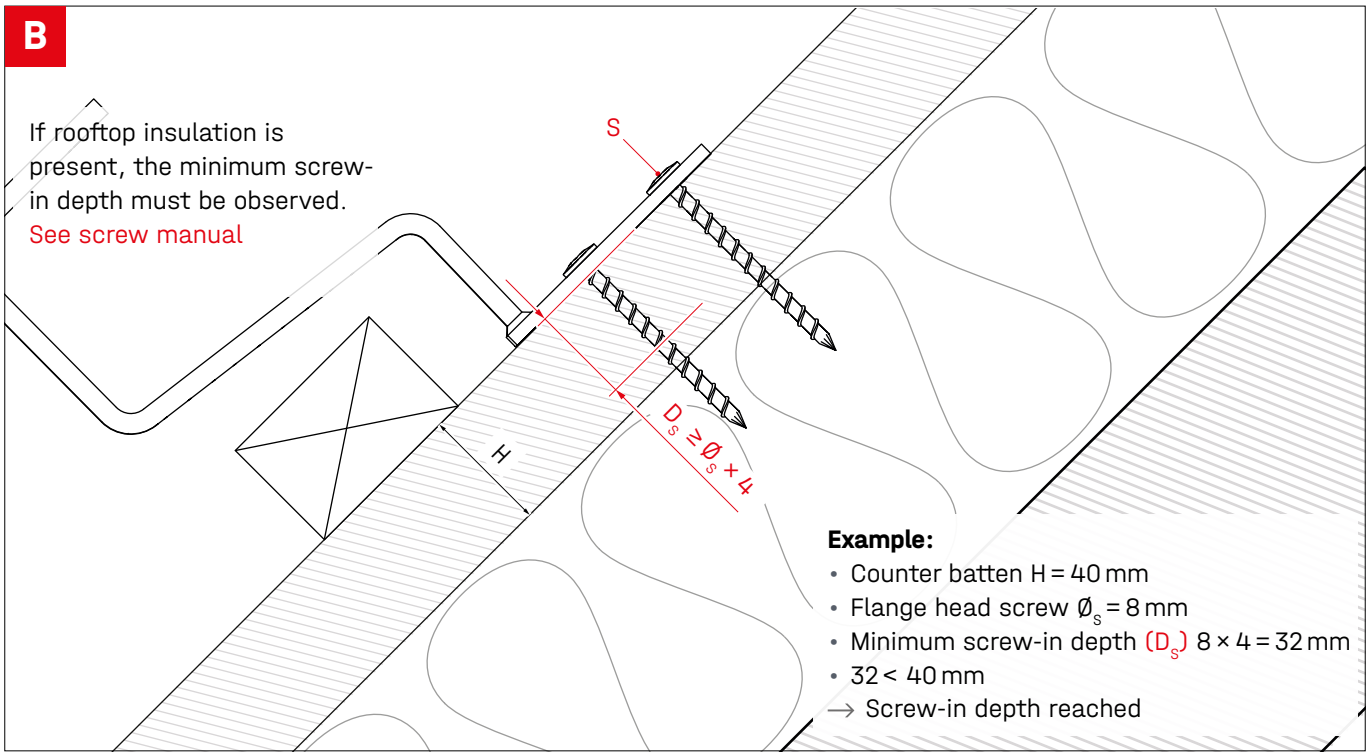

Portrait

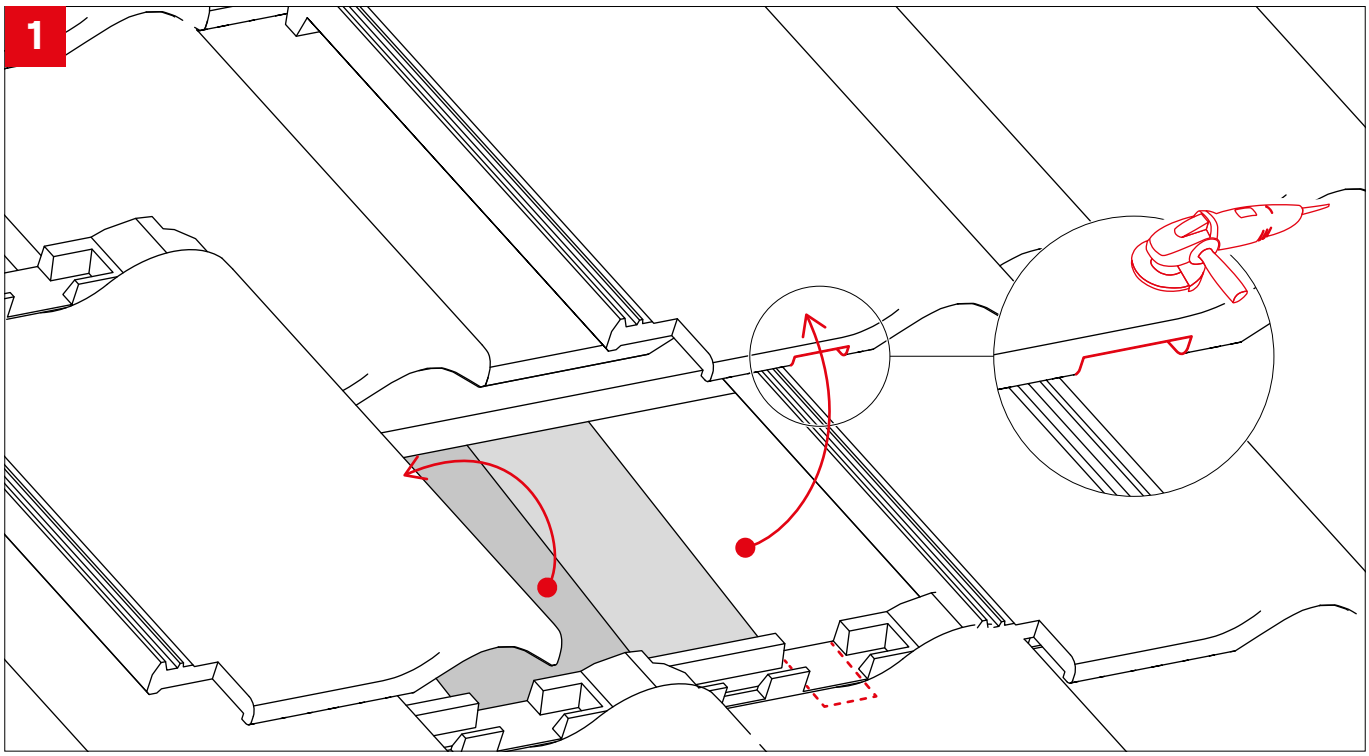

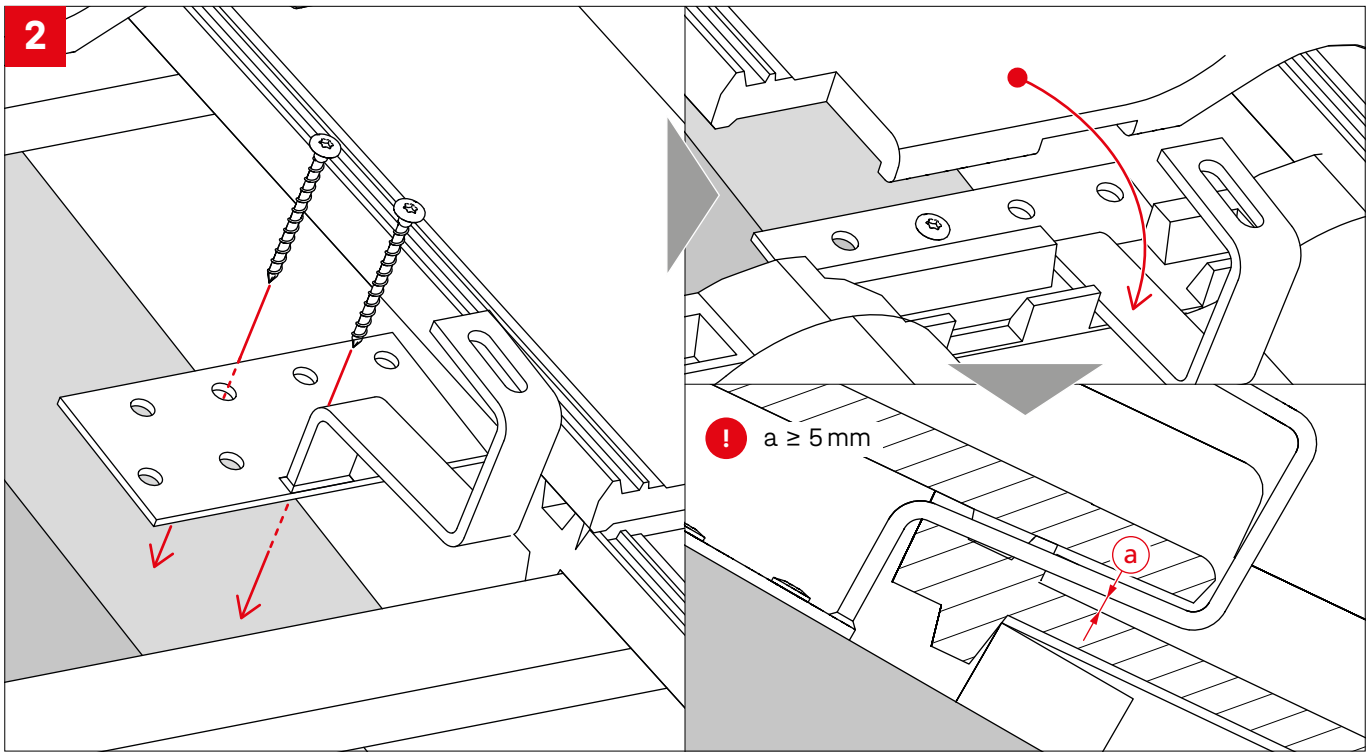

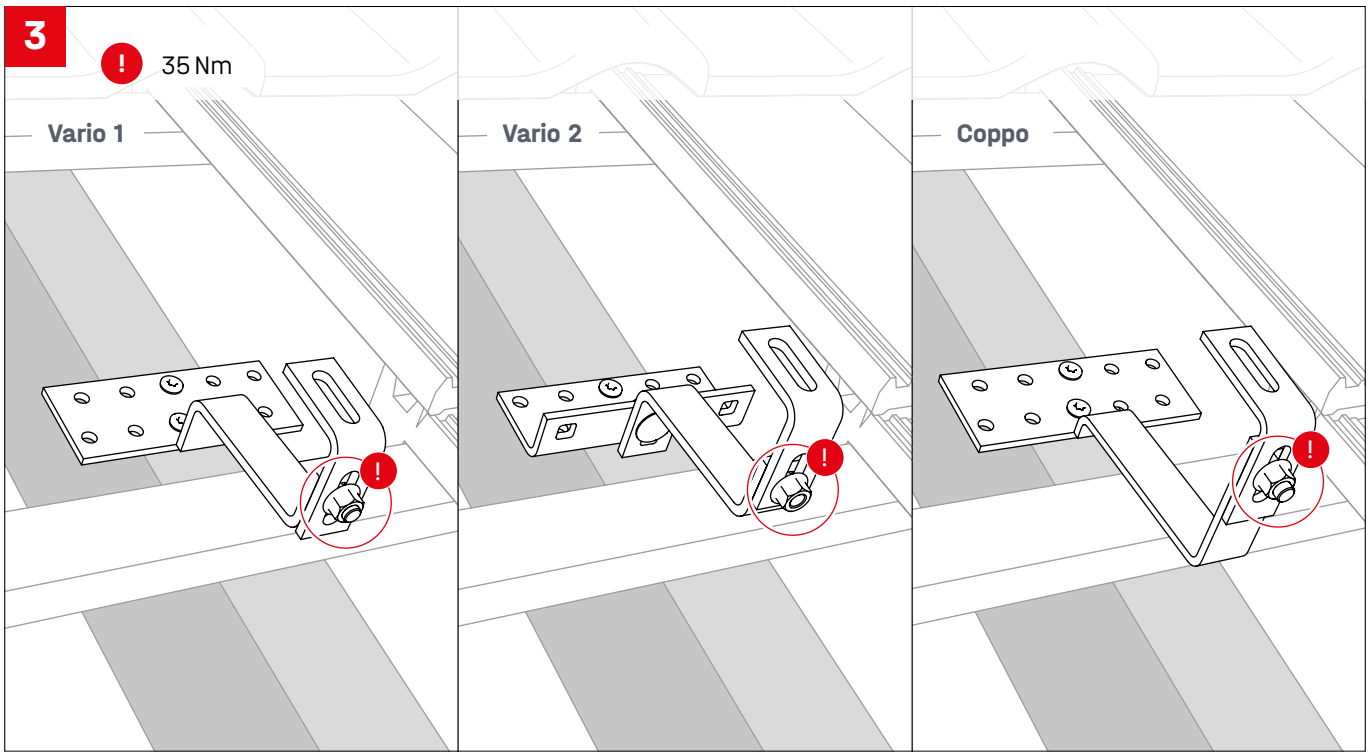
3
35 Nm
Vario 1
Vario 2
Coppo

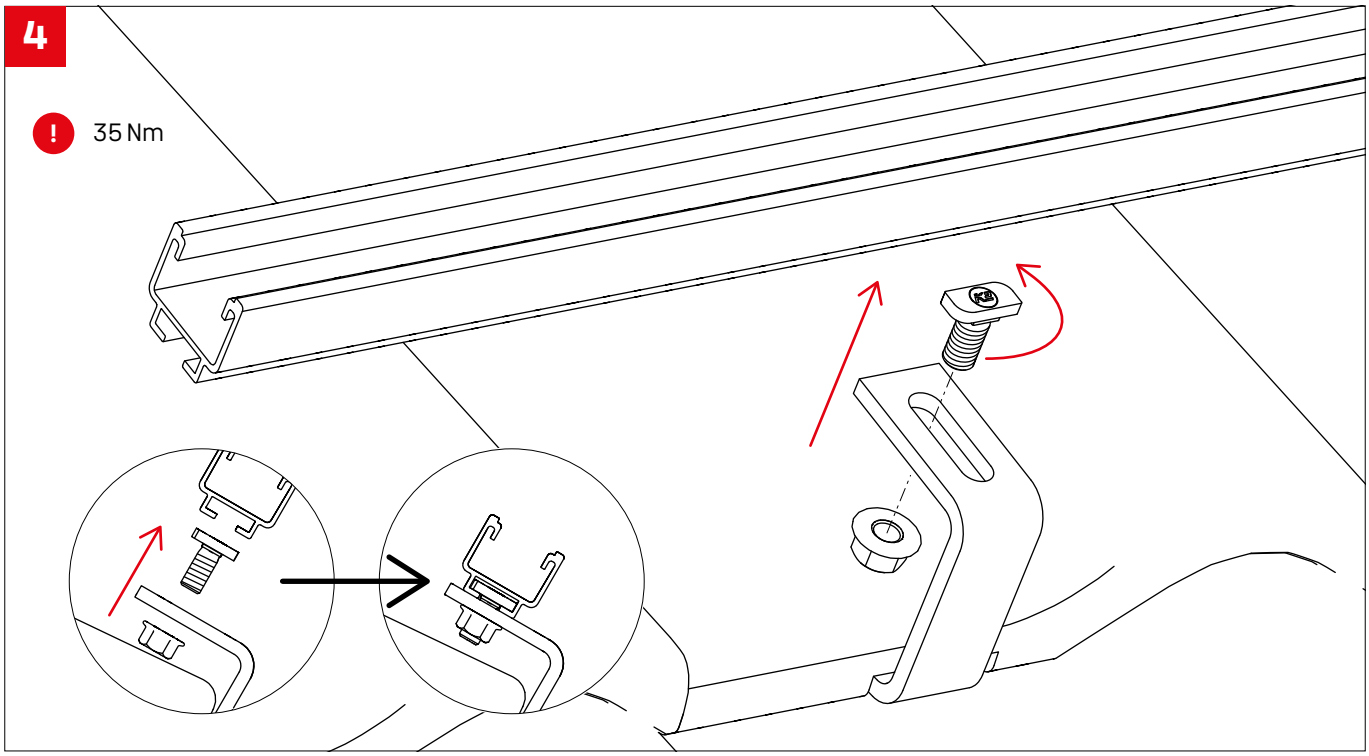
4
35 Nm

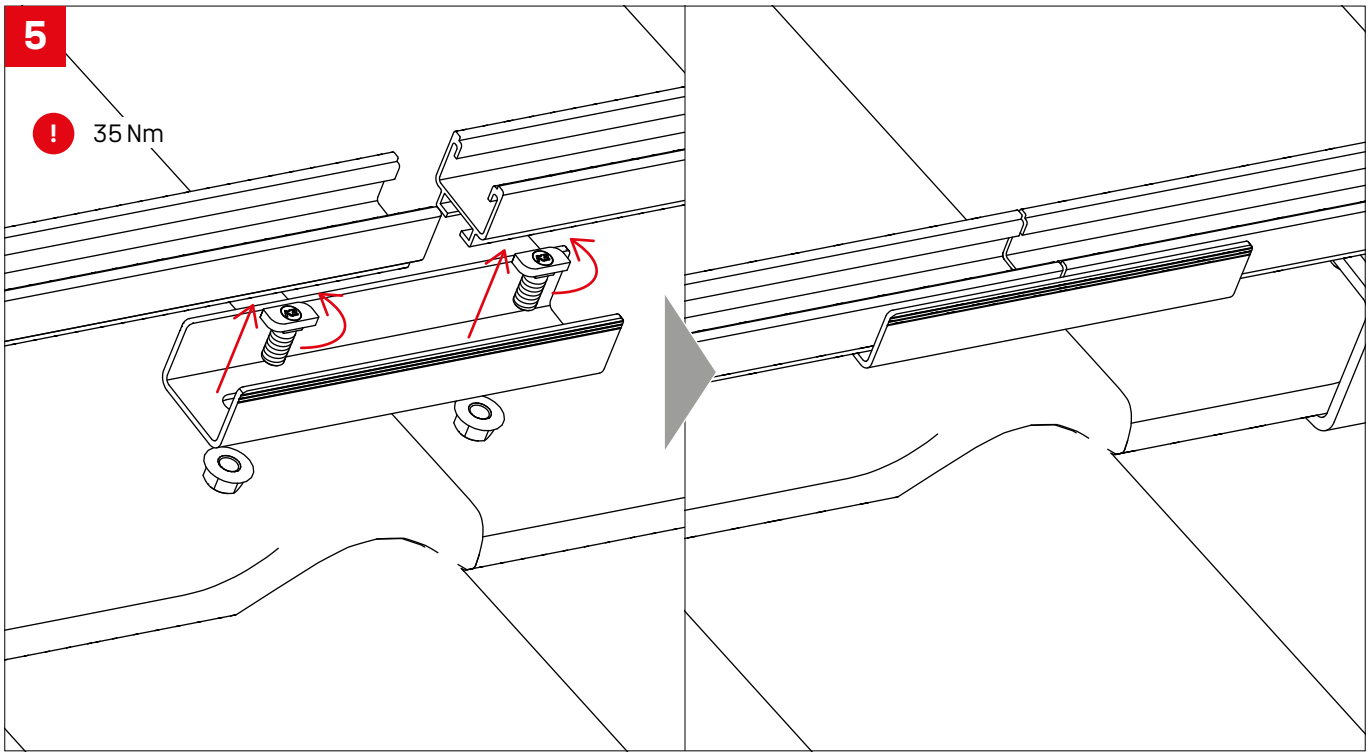
5
!
35 Nm

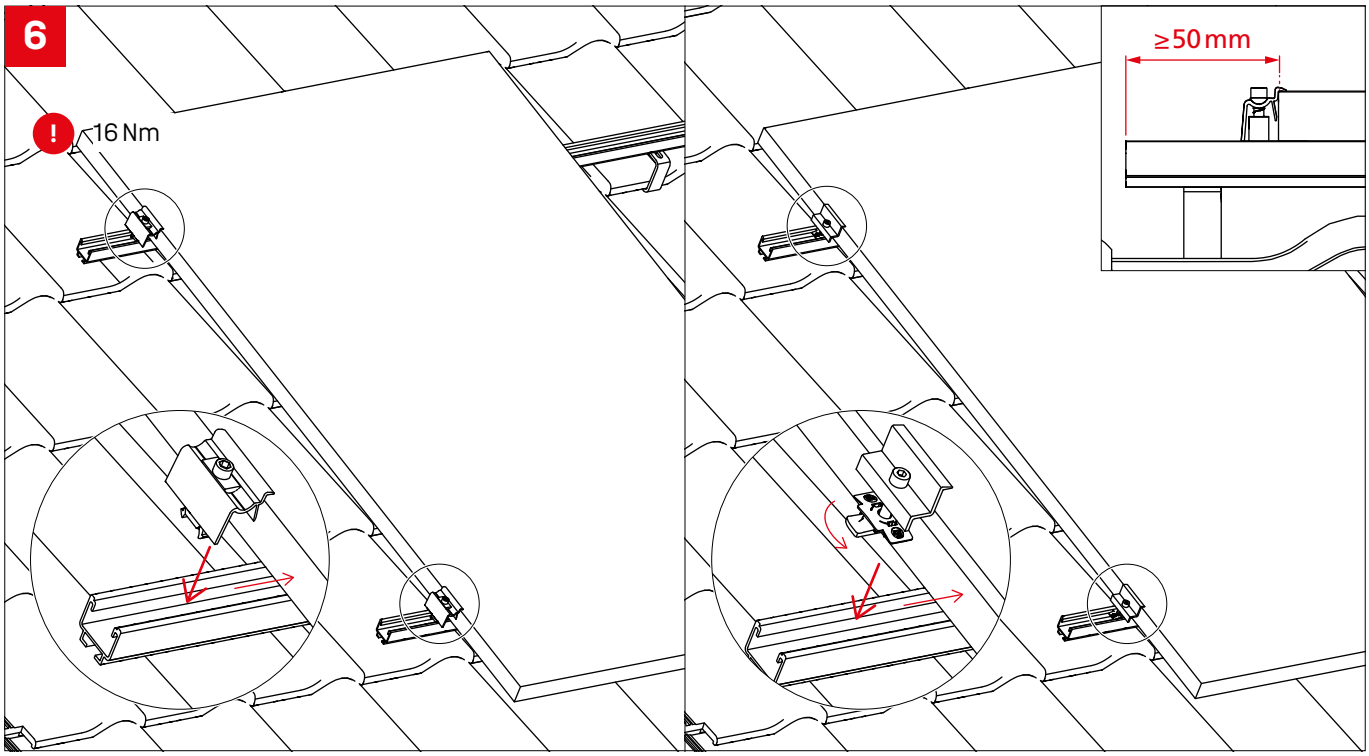
6
!
16 Nm
≥50 mm

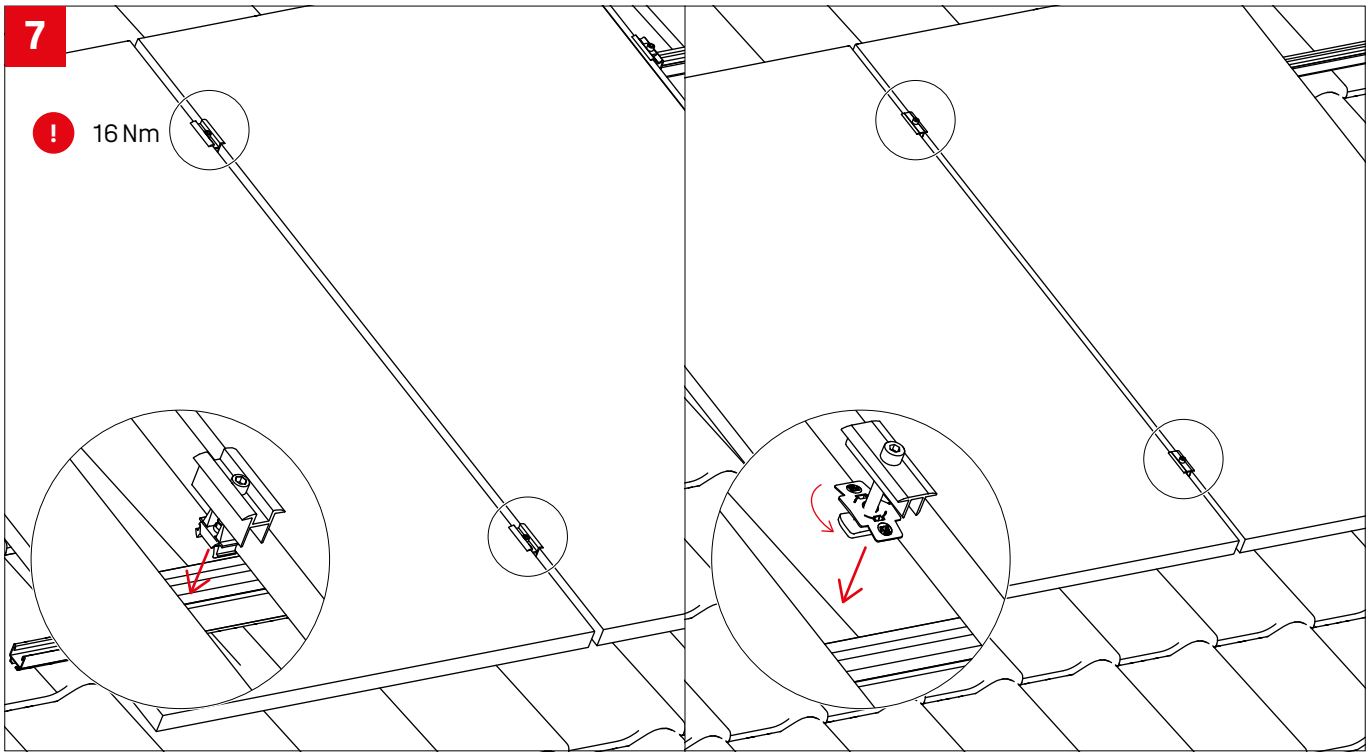

Thermal separation

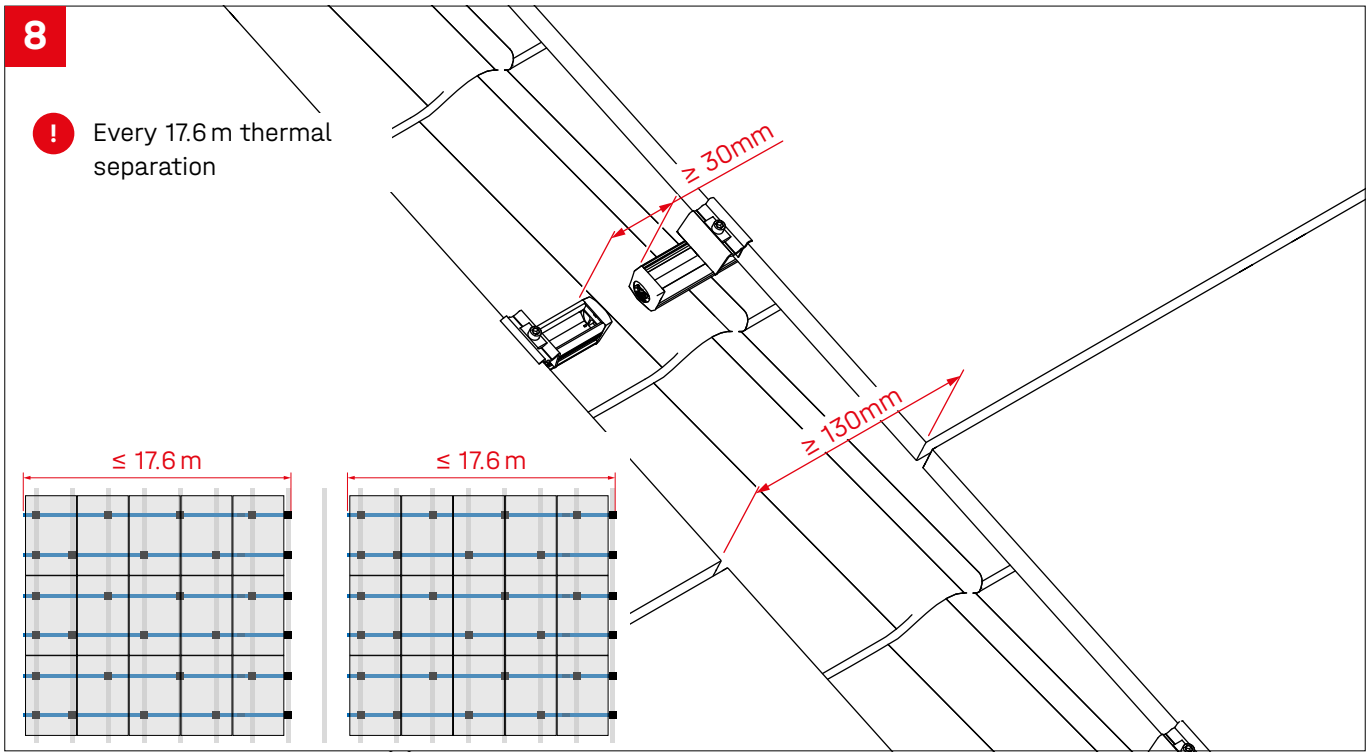

Assembly Landscape

Second rail layer

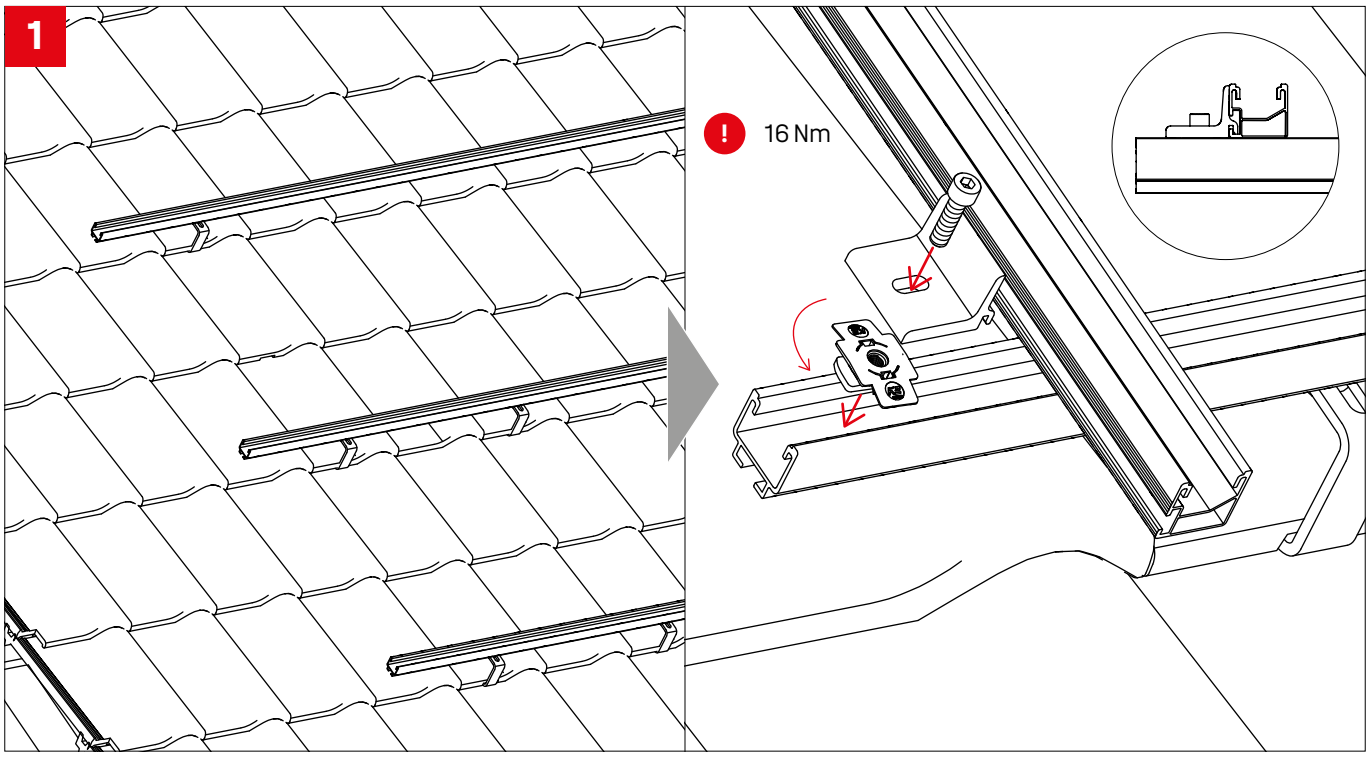

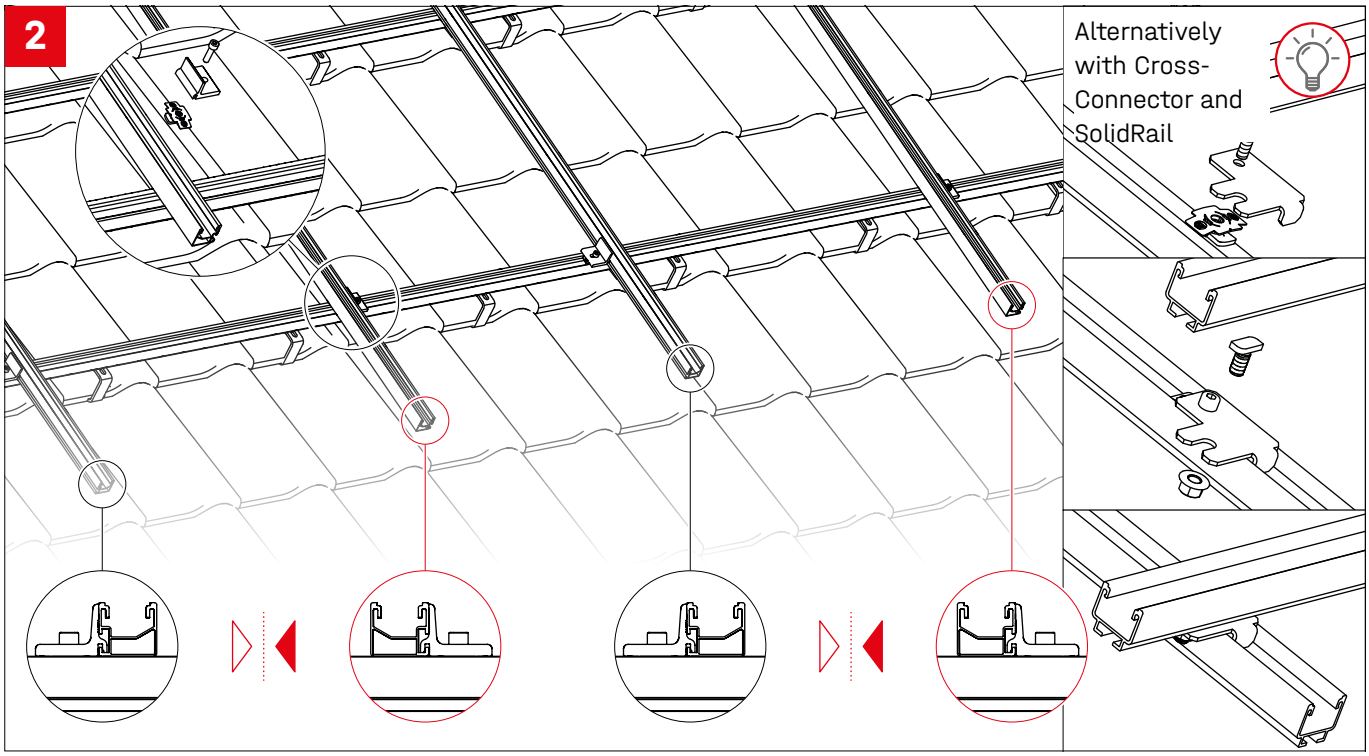

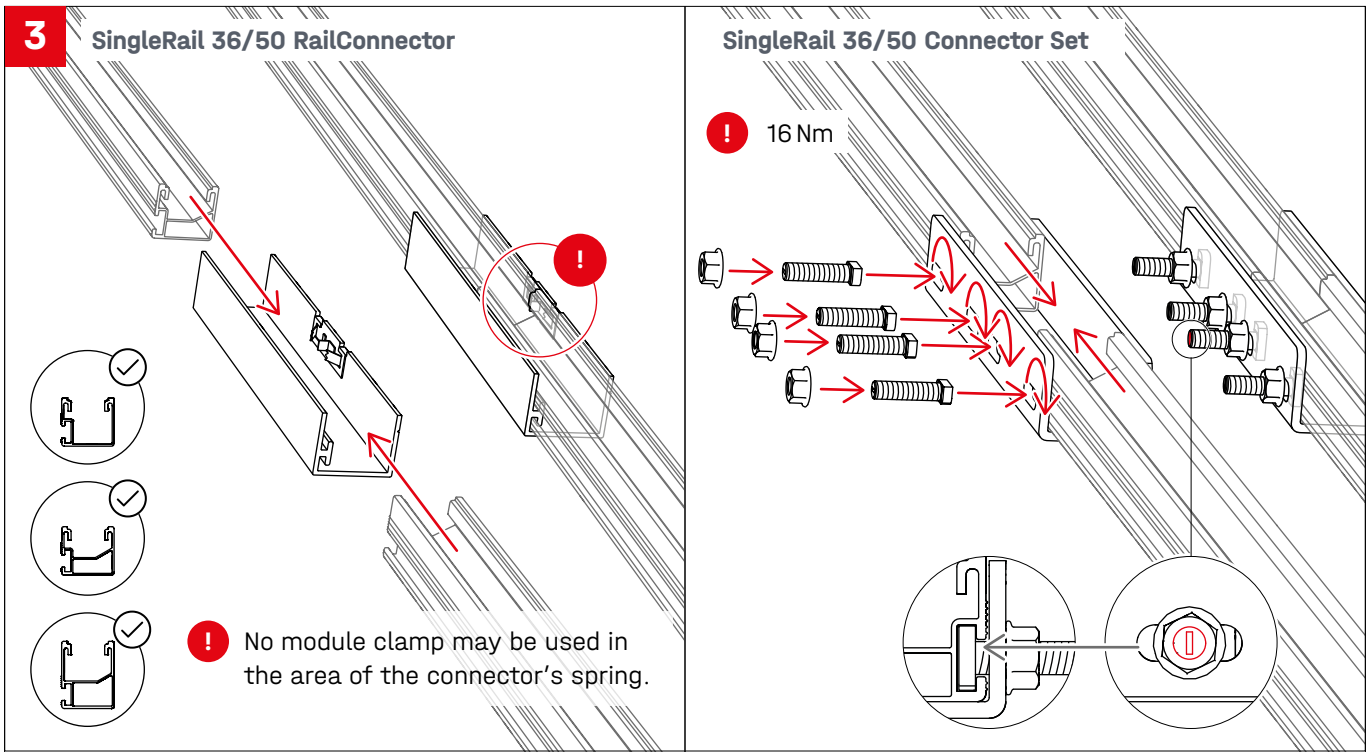

Thermal separation

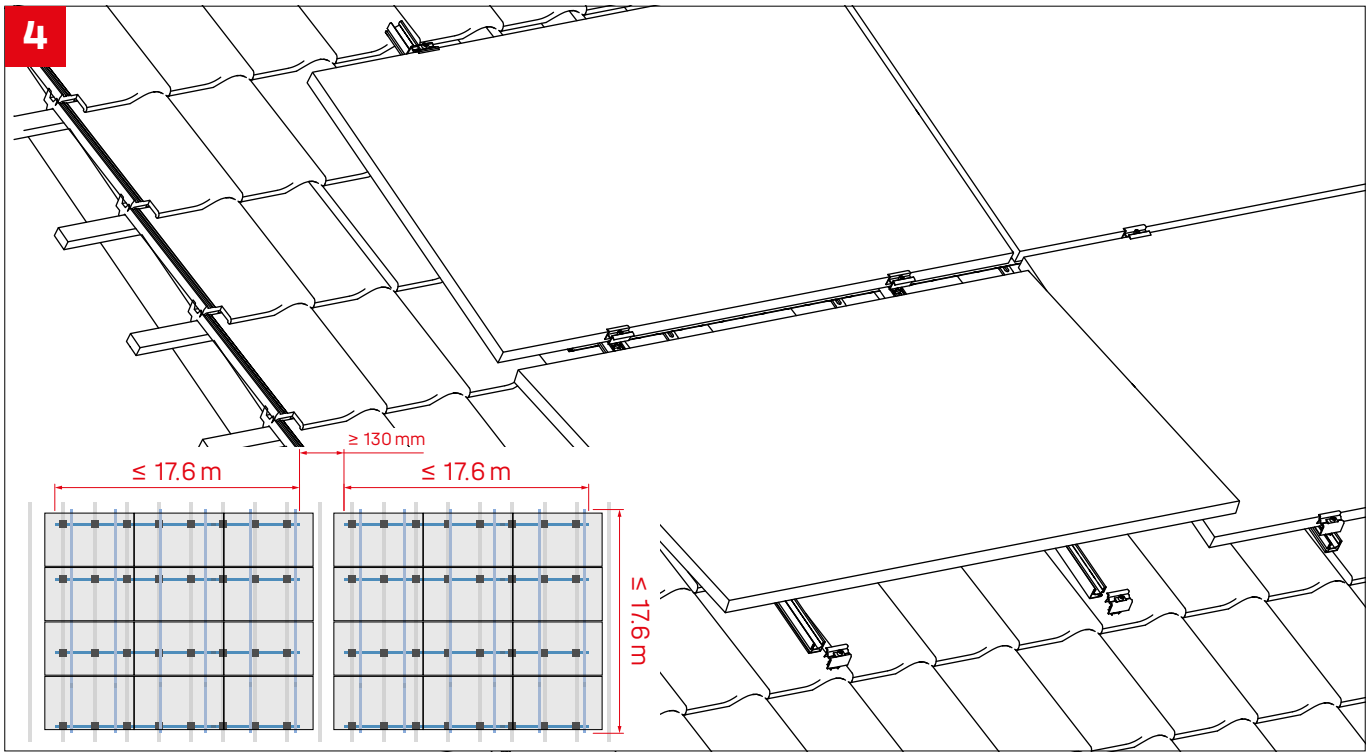

Optional assembly steps

Height compensation on the roof hook bracket

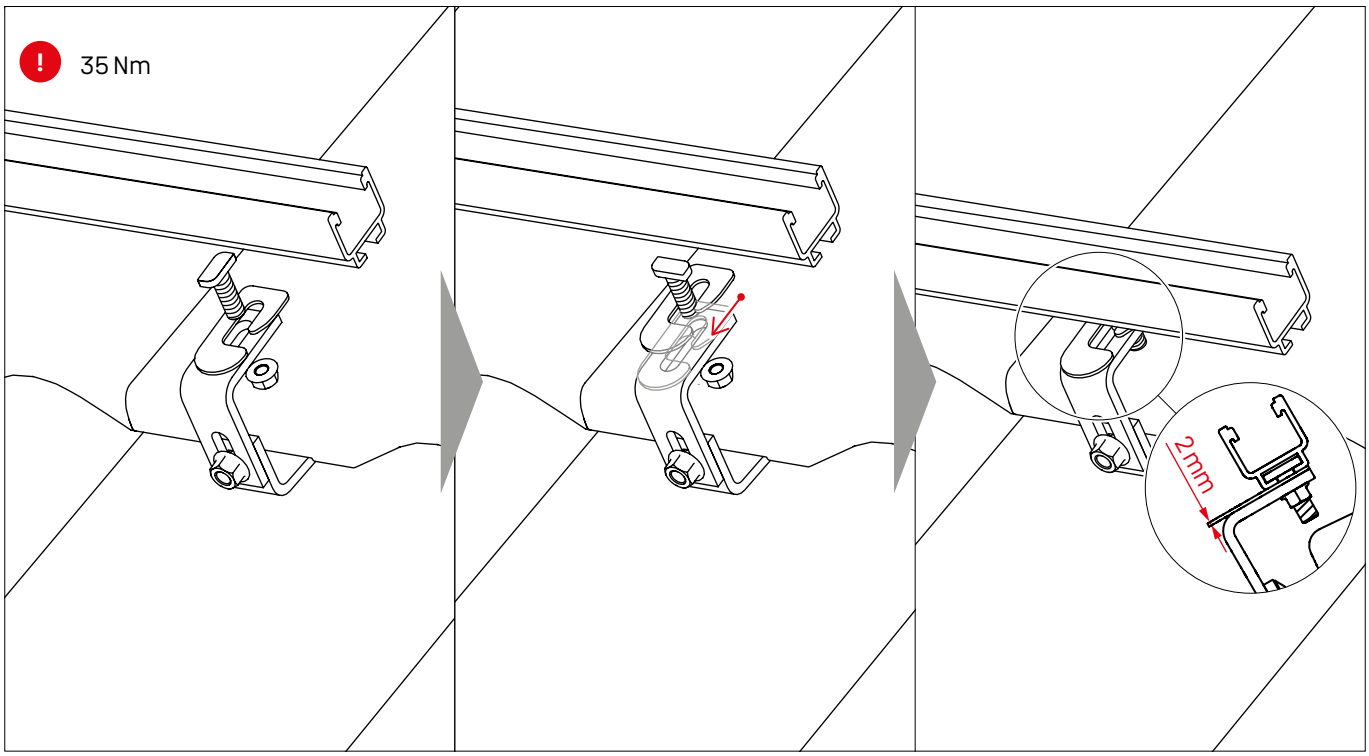

Cable managment

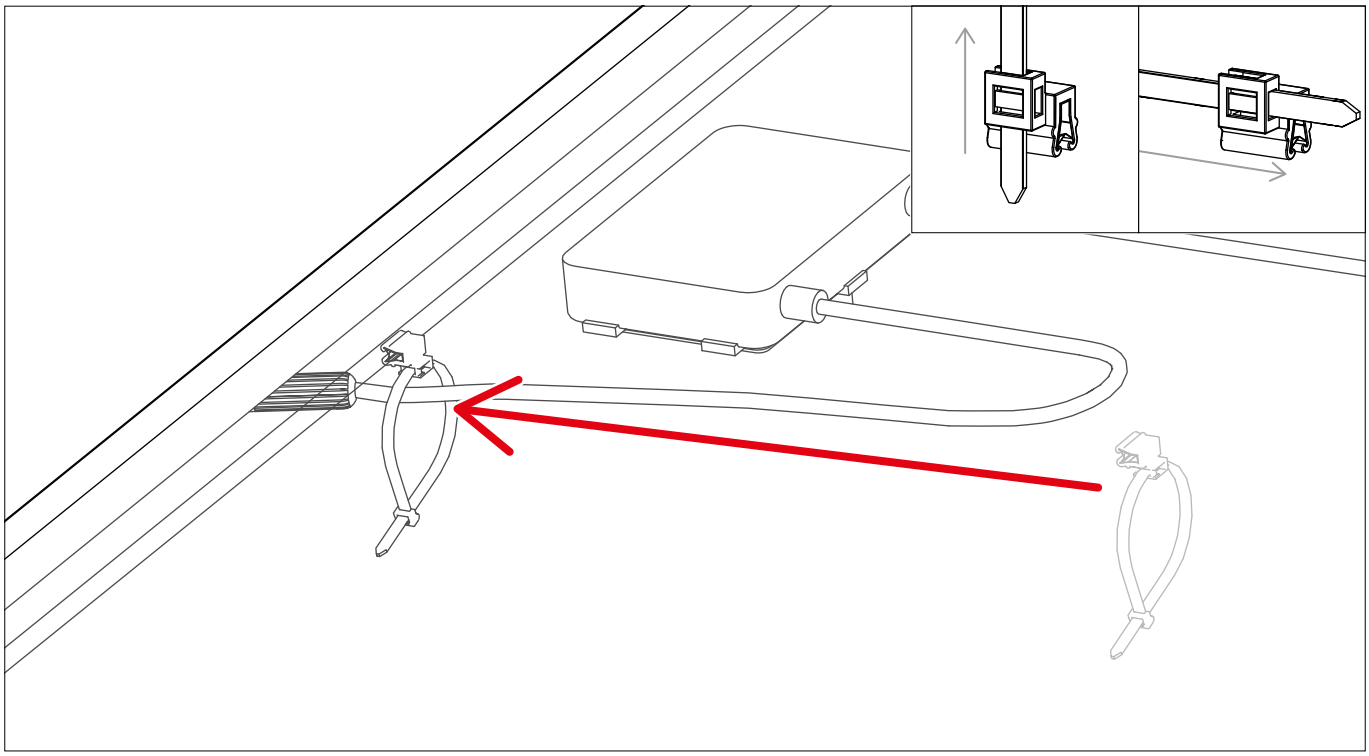

Notes

Notes

Connecting Strength

Thank you for choosing a K2 mounting system.

Systems from K2 Systems are quick and easy to install. We hope that these instructions have been of help to you. Please do not hesitate to contact us if you have any suggestions, questions or ideas for improvements. All contact details can be found at:

- **k2-systems.com/en/contact/**
- **Service hotline: +49 (0)7159 420 590**

Our General Terms and Conditions of Delivery apply and can be found at: k2-systems.com

K2 Systems GmbH
Haldenstraße 1 · 71272 Renningen · Germany
+49 (0) 7159 - 42059 - 0 · info@k2-systems.com · k2-systems.com

Pantile Assembly EN V16 | 0726 · Subject to change without notice
Images of the products are indicative and may differ from the original.